GSFC JPSS CMO
October 27, 2015
Released

Effective Date: October 22, 2015
Revision I

Joint Polar Satellite System (JPSS) Ground Project
Code 474
429-05-02-42

Mission Data Format Control Book National Polar-Orbiting Operational Environmental Satellite System (NPOESS) Preparatory Project (NPP) (MDFCB)

This NPP document transitioned to the JPSS Program and is under Configuration Management control by the JPSS Ground Project. This document will be reformatted if changes are made to it and will reflect the next document revision letter and the effective date which will be noted in the top right hand corner of the document. This document will be maintained in the JPSS Management Information System (MIS).

For Public Release

The information provided herein does not contain technical data as defined in the International Traffic in Arms Regulations (ITAR) 22 CFC 120.10. This document has been approved For Public Release to the NOAA Comprehensive Large Array-data Stewardship System (CLASS).

Goddard Space Flight Center
Greenbelt, Maryland

National Aeronautics and
Space Administration

Check the JPSS MIS Server at https://jpssmis.gsfc.nasa.gov/frontmenu_dsp.cfm to verify that this is the correct version prior to use.

Mission Data Format Control Book National Polar-Orbiting Operational Environmental Satellite System (NPOESS) Preparatory Project (NPP) (MDFCB) JPSS Review/Approval Page

Approved By:
Robert M. Morgenstern
JPSS Ground Systems Engineering Manager

Electronic Approval available on-line at: https://jpssmis.gsfc.nasa.gov/frontmenu_dsp.cfm

---

Goddard Space Flight Center
Greenbelt, Maryland

Preface

This document is under JPSS Ground configuration control. Once this document is approved, JPSS approved changes are handled in accordance with Class I and Class II change control requirements as described in the JPSS Configuration Management Procedures, and changes to this document shall be made by complete revision.

Any questions should be addressed to:

JPSS Configuration Management Office
NASA/GSFC
Code474
Greenbelt, MD 20771

CHANGE RECORD PAGE

DOCUMENT TITLE: NPP Mission Data Format Control Book (MDFCB)

DOCUMENT DATE: April 27, 2011

ISSUE	DATE	PAGES AFFECTED	DESCRIPTION
Original	02/28/06	MDFCB Main Body: All pages MDFCB Appendix A: All pages	Approved by CCR 429-05-02-102R1
CH-01	08/05/08	MDFCB Main Body: Pages iii, v, vi, viii, x, 1-2, 2-2, 3-1, through 3-8, 3-11, 4-290 through 4-342, and pages 5-1 through 5-6. MDFCB Appendix A: No changes to Appendix A	Approved by CCR 429-08-02-122R1
Revision A	04/05/08	MDFCB Main Body: All pages MDFCB Appendix A: All pages	Approved by CCR 429-09-02-131
CH-01	06/16/09	MDFCB Main Body: Pages iii, 4-105 through 4-219, 4-222 through 4-226, 4-228, 4-231, 4-234 through 4-236, 4-240, 4-242, 4-243, 4-246 through 4-249, 4-253, 4-258 through 4-260, 4-263, 4-265, 4-269, 4-270, 4-281, 4-283 through 4-285, 4-295, 4-297 and page 4-301. MDFCB Appendix A: Pages A-26 through A-64, A-67 through A-75, A-80, A-84 through A-89, A-94 through A-96, A-110 and page A-118.	Approved by CCR 429-09-02-132
CH-02	01/19/10	MDFCB Main Body: Pages iii, 2-1, 4-42, 4-119, 4-127, 4-134, 4-141, 4-149, 4-156, 4-163, 4-171, 4-179, 4-187, 4-196, 4-204, 4-212, 4-220, 4-230, 4-246, 4-250 and page 4-265. MDFCB Appendix A: Pages A-3, A-22, A-65, A-67, A-76, A-78, A-80, A-81, A-83, A-84, A-107 through A-122, A-124, A-126 through A-130, A-133, A-136, A-137, A-140, A-143 and page A-144.	Approved by CCR 429-09-02-136
CH-03	08/31/10	MDFCB Main Body: Pages iii, 2-1, 4-168 through 4-171, 4-177, 4-178, 4-179, 4-185, 4-186, 4-187, 4-193, 4-194, 4-195, 4-260, 4-269 and page 4-271. MDFCB Appendix A: Pages A-3, A-8, A-9, A-27, A-102 through A-105, A-110, A-128, A-131 through A-136, A-138 through A-147, A-153, A-154 and page A-155.	Approved by CCR 429-10-02-139
Revision B	04/27/11	MDFCB Main Body – all pages MDFCB Appendix A: - all pages	Approved by CCR 429-11-02-142

EOS 420-CM-05 (4/92)

Check the JPSS MIS Server at https://jpssmis.gsfc.nasa.gov/frontmenu_dsp.cfm to verify that this is the correct version prior to use.

CHANGE RECORD PAGE

DOCUMENT TITLE: NPP Mission Data Format Control Book (MDFCB)

DOCUMENT DATE: April 27, 2011

ISSUE	DATE	PAGES AFFECTED	DESCRIPTION
CH-01	07/11/11	MDFCB Main Body – Pages iii, v, 3-2, 3-4, 3-5, 4-47, 4-67, 4-69, 4-70, 4-71, 4-72, 4-73, 4-74, 4-75, 4-76, 4-77, 4-78, 4-79, 4-81, 4-82, 4-83, 4-84, 4-85, 4-86, 4-87, 4-88, 4-90, 4-91, 4-239, 4-240, 4-303, 4-362, and page 4-363. MDFCB Appendix A: - No changes to Appendix A	Approved by CCR 429-11-02-145
CH-02	11/14/11	MDFCB Main Body – Page iii and page 3-5. MDFCB Appendix A: - No changes to Appendix A	Approved by CCR 429-11-02-167

EOS 420-CM-05 (4/92)

Check the JPSS MIS Server at https://jpssmis.gsfc.nasa.gov/frontmenu_dsp.cfm to verify that this is the correct version prior to use.

Change History Log

Revision	Effective Date	Description of Changes (Reference the CCR & CCB/ERB Approve Date)
Rev C	Aug 16, 2012	This version incorporates 474-CCR-12-0449. This was approved at the JPSS Ground ERB on August 16, 2012.
Rev D	May 3, 2013	This was approved by the JPSS Ground ERB via 474-CCR-12-0793 and 474-CCR-13-0958 on the effective date shown.
Rev E	July 11, 2013	This was approved by the JPSS Ground ERB via 474-CCR-13-1111 on the effective date shown.
Rev F	January 31, 2014	This was approved via Class 2 CCR by the JPSS Ground ERB via 474-CCR-14-1525 on the effective date shown.
Rev G	Jun 05, 2014	This was approved by the JPSS Ground ERB via 474-CCR-14-1790 on the effective date shown.
Rev H	Jul 23, 2015	This was approved by the JPSS Ground ERB via 474-CCR-15-2504 on the effective date shown.
Rev I	Oct 22, 2015	This was approved by the JPSS Ground ERB via 474-CCR-15-2431 on the effective date shown.

Table of Contents

1. Introduction ... 1
1.1 Scope ... 1
1.2 Responsibility/Configuration Management Process ... 1
1.3 Document Organization ... 2
1.4 Document Conventions ... 2

2. Documents ... 3
2.1 Applicable Documents ... 3
2.2 Reference Documents ... 3
2.3 Other Related Documents ... 4

3. Mission Data Systems ... 5
3.1 Mission Data Overview ... 5
3.1.1 Spacecraft Processing Of Mission Data ... 5
3.1.2 Mission Data Storage ... 13
3.1.3 Mission Data Downlinking ... 13
3.1.4 HRD Fill Data ... 14
3.2 Operational Modes ... 14
3.2.1 Satellite Modes ... 14
3.2.2 Instrument Operational Modes ... 16

4. Mission Data Formats ... 17
4.1 ATMS ... 17
4.1.1 Introduction ... 17
4.1.2 Instrument Function ... 17
4.1.3 Modes and Packet Structure ... 21
4.1.3.1 Off/Suvival Mode ... 23
4.1.3.2 Operational Mode ... 23
4.1.3.3 Diagnostic Mode ... 23
4.1.3.4 Safe Hold ... 24
4.1.4 Mission Data ... 24
4.1.4.1 Wire PRTs ... 26
4.1.4.2 Receiver Shelf 2-Wire PRT ... 26
4.1.4.3 Other 2-Wire PRTs ... 26
4.1.4.4 Science Data ... 27
4.1.4.5 Calibration Data ... 30
4.1.4.6 Engineering Data-Hot Cal Temperatures ... 37
4.1.4.7 Engineering Data-Health and Status ... 38
4.1.4.8 Diagnostic Data ... 43
4.1.4.9 Dwell Data ... 51
4.1.4.10 Memory Dump ... 57
4.1.4.11 Test Packet ... 60
4.2 CrIS ... 61

Check the JPSS MIS Server at https://jpssmis.gsfc.nasa.gov/frontmenu_dsp.cfm to verify that this is the correct version prior to use.

4.2.1 Introduction **61**
4.2.2 Instrument Function **62**
4.2.3 Modes and Packet Structure **67**
4.2.3.1 Off Mode ***68***
4.2.3.2 Survival Mode ***68***
4.2.3.3 Safe Mode ***68***
4.2.3.4 Diagnostic Mode ***68***
4.2.3.5 Operational Mode ***69***
4.2.3.6 Outgas Mode ***69***
4.2.4 Mission Data **69**
4.2.4.1 Science Data ***70***
4.2.4.2 Calibration Data ***80***
4.2.4.3 Engineering Data ***92***
4.2.4.4 Diagnostic Data ***102***
4.2.4.5 Dwell Data ***106***
4.2.4.6 Memory Dump ***118***
4.2.4.7 Test Packet ***120***
4.3 OMPS **121**
4.3.1 Introduction **121**
4.3.2 Instrument Function **122**
4.3.3 Modes and Packet Structure **123**
4.3.3.1 Off Mode ***125***
4.3.3.2 Survival Mode ***125***
4.3.3.3 Boot Mode ***125***
4.3.3.4 Safe Hold Mode ***125***
4.3.3.5 Decon Mode ***125***
4.3.3.6 Operate Mode ***126***
4.3.4 Mission Data **127**
4.3.4.1 Science Data ***131***
4.3.5 Diagnostic Data **185**
4.3.5.1 Diagnostic Nadir Total Column ***185***
4.3.5.2 Diagnostic Nadir Profiler ***194***
4.3.5.3 Diagnostic Limb Profiler Long Exposure ***202***
4.3.5.4 Diagnostic Limb Profiler Short Exposure ***210***
4.3.5.5 Diagnostic Nadir Total Column Calibration ***218***
4.3.5.6 Diagnostic Nadir Profiler Calibration ***226***
4.3.5.7 Diagnostic Limb Profiler Calibration ***234***
4.3.6 Dwell Data **242**
4.3.7 Memory Dump **244**
4.3.8 Test Telemetry **247**
4.4 VIIRS **249**
4.4.1 Introduction **249**
4.4.2 Instrument Function **251**
4.4.3 Modes and Packet Structure **254**
4.4.3.1 Off Mode and Launch Mode ***258***
4.4.3.2 Survival Mode ***258***

Check the JPSS MIS Server at https://jpssmis.gsfc.nasa.gov/frontmenu_dsp.cfm to verify that this is the correct version prior to use.

4.4.3.3 Activation Mode *259*
4.4.3.4 Outgassing Mode *259*
4.4.3.5 Operational Mode *259*
4.4.3.6 Diagnostic Mode *259*
4.4.3.7 Safe Mode *260*
4.4.4 Mission Data **261**
4.4.4.1 Science Data *261*
4.4.4.2 Calibration Data *283*
4.4.4.3 Diagnostic Data *316*
4.4.4.4 Housekeeping Data *328*
4.4.4.5 Memory Dump *328*
4.4.4.6 Test Packet *331*
4.5 CERES **333**
4.5.1 Introduction **333**
4.5.2 Instrument Function **333**
4.5.3 Modes and Packet Structure **336**
4.5.3.1 Off, Launch and Survival Modes *338*
4.5.3.2 Safe Mode *338*
4.5.3.3 Diagnostic Mode *338*
4.5.3.4 Science Modes *339*
4.5.4 Mission Data **341**
4.5.4.1 Science Data *341*
4.5.4.2 Calibration Data *365*
4.5.4.3 Diagnostic Data *365*
4.6 Spacecraft **385**
4.6.1 Introduction **385**
4.6.2 Instrument Function **385**
4.6.3 Modes and Packet Structure **385**
4.6.4 Mission Data **386**
4.6.4.1 Test/Fill Packet *386*
4.6.4.2 Attitude and Ephemeris Packet *387*
5. Acronyms and Abbreviations **389**

List of Figures

Figure 3.1-1. NPP Satellite Communication Links 14
Figure 4.1-1. ATMS Block Diagram 19
Figure 4.1-2. ATMS Redundancies 19
Figure 4.1-3. ATMS Operational Scan Pattern 21
Figure 4.1-4. ATMS Modes and Mode Transitions 23
Figure 4.1-5. ATMS Science Data Packet Format 28
Figure 4.1-6. ATMS Calibration Packet Format 31
Figure 4.1-7. ATMS Engineering Hot Cal Temperature Packet Format 37
Figure 4.1-8. ATMS Engineering Health and Status Packet Format 39
Figure 4.1-9. ATMS Diagnostic Packet Format 44

Check the JPSS MIS Server at https://jpssmis.gsfc.nasa.gov/frontmenu_dsp.cfm to verify that this is the correct version prior to use.

Figure 4.1-10. ATMS Dwell Packet Format ... 52
Figure 4.1-11. ATMS Memory Dump Standalone Packet Format ... 58
Figure 4.1-12. ATMS Memory Dump Initial Packet Forma ... 58
Figure 4.1-13. ATMS Memory Dump Follow-on Packet Format ... 59
Figure 4.1-14. ATMS Memory Dump Final Packet Format ... 59
Figure 4.1-15. ATMS Test Packet Format ... 60
Figure 4.2-1. CrIS Drawing of the Instrument ... 61
Figure 4.2-2. CrIS Field of Regard About Nadir and 9 Field of Views ... 62
Figure 4.2-3. CrIS Signal Radiance Flow to Detectors ... 63
Figure 4.2-4. CrIS Modules (Exploded View) ... 64
Figure 4.2-5. CrIS Scene View: 30 Steps per 8 Second Scan ... 64
Figure 4.2-6. CrIS Functional Flow of Space Processing ... 66
Figure 4.2-7. CrIS Modes and Mode Transitions ... 67
Figure 4.2-8. CrIS Normal Cross-track Scan Sequence (Timing in seconds) ... 69
Figure 4.2-9. CrIS Interferogram Packet Format ... 76
Figure 4.2-10. CrIS Science/Calibration Telemetry Packet Format ... 81
Figure 4.2-11. CrIS Engineering Packet Format ... 94
Figure 4.2-12. CrIS Diagnostic Interferogram Packet Format ... 103
Figure 4.2-13. CrIS IM Telemetry Dwell Packet Forma ... 107
Figure 4.2-14. CrIS Housekeeping Telemetry Dwell Packet Format ... 111
Figure 4.2-15. CrIS SSM Telemetry Dwell Packet Format ... 114
Figure 4.2-16. CrIS Memory Dump Packet Format ... 119
Figure 4.2-17. CrIS Test Packet Format ... 120
Figure 4.3-1. OMPS NPP Flight Configuration ... 122
Figure 4.3-2. OMPS Modes and Mode Transitions ... 126
Figure 4.3-3. OMPS CCD Block Diagram ... 129
Figure 4.3-4. (For Reference Only) OMPS Total Column On-Orbit Windowing and Spatial Binning ... 132
Figure 4.3-5. OMPS Nadir Total Column First Packet Format ... 133
Figure 4.3-6. OMPS Nadir Total Column Middle Packet Format ... 134
Figure 4.3-7. OMPS Nadir Total Column Last Packet Format ... 134
Figure 4.3-8. (For Reference Only) OMPS Nadir Profile On-orbit Windowing and Spatial Binning ... 140
Figure 4.3-9. OMPS Nadir Profiler First Packet Format ... 142
Figure 4.3-10. OMPS Nadir Profiler Last Packet Format ... 142
Figure 4.3-11. OMPS Limb Profiler Long Exposure First Packet Format ... 148
Figure 4.3-12. OMPS Limb Profiler Long Exposure Middle Packet Format ... 149
Figure 4.3-13. OMPS Limb Profiler Long Exposure Last Packet Format ... 149
Figure 4.3-14. OMPS Limb Profiler Short Exposure First Packet Format ... 155
Figure 4.3-15. OMPS Limb Profiler Short Exposure Middle Packet Format ... 155
Figure 4.3-16. OMPS Limb Profiler Short Exposure Last Packet Format ... 156
Figure 4.3-17. OMPS First Grouped Nadir Total Column Calibration First Packet Format ... 163
Figure 4.3-18. OMPS Grouped Nadir Total Column Calibration Middle Packet Format ... 163
Figure 4.3-19. OMPS Grouped Nadir Total Column Calibration Last Packet Format ... 164
Figure 4.3-20. OMPS Grouped Nadir Total Column Calibration First Packet Format ... 164
Figure 4.3-21. OMPS First Grouped Nadir Profiler Calibration First Packet Format ... 170

Check the JPSS MIS Server at https://jpssmis.gsfc.nasa.gov/frontmenu_dsp.cfm to verify that this is the correct version prior to use.

Figure 4.3-22. OMPS Grouped Nadir Profiler Calibration Middle Packet Format 171
Figure 4.3-23. OMPS Grouped Nadir Profiler Calibration Last Packet Format 171
Figure 4.3-24. OMPS Grouped Nadir Profiler Calibration First Packet Format 172
Figure 4.3-25. OMPS First Grouped Limb Calibration First Packet Format 178
Figure 4.3-26. OMPS Grouped Limb Calibration Middle Packet Format 178
Figure 4.3-27. OMPS Grouped Limb Calibration Last Packet Format 179
Figure 4.3-28. OMPS Grouped Limb Calibration First Packet Format..... 179
Figure 4.3-29. OMPS Ungrouped Diagnostic Nadir Total Column Packet Format..... 186
Figure 4.3-30. OMPS First Grouped Diagnostic Nadir Total Column First Packet Format 186
Figure 4.3-31. OMPS Grouped Diagnostic Nadir Total Column Middle Packet Format 187
Figure 4.3-32. OMPS Diagnostic Nadir Total Column Last Packet Format 187
Figure 4.3-33. OMPS Diagnostic Nadir Total Column Last Packet Format 188
Figure 4.3-34. OMPS Ungrouped Diagnostic Nadir Profiler Packet Format 194
Figure 4.3-35. OMPS Grouped Diagnostic Nadir Profiler First Packet Format..... 195
Figure 4.3-36. OMPS Grouped Diagnostic Nadir Profiler Middle Packet Format 195
Figure 4.3-37. OMPS Grouped Diagnostic Nadir Profiler Last Packet Format 196
Figure 4.3-38. OMPS Grouped Diagnostic Nadir Profiler First Packet Format..... 196
Figure 4.3-39. OMPS Ungrouped Diagnostic Limb Profiler Long Exposure Packet Format ... 202
Figure 4.3-40. OMPS First Grouped Diagnostic Limb Profiler Long Exposure First Packet Format 203
Figure 4.3-41. OMPS Grouped Diagnostic Limb Profiler Long Exposure Middle Packet Format 203
Figure 4.3-42. OMPS Grouped Diagnostic Limb Profiler Long Exposure Last Packet Format 204
Figure 4.3-43. OMPS Grouped Diagnostic Limb Profiler Long Exposure First Packet Format 204
Figure 4.3-44. OMPS Ungrouped Diagnostic Limb Profiler Short Exposure Packet Format.... 210
Figure 4.3-45. OMPS First Grouped Diagnostic Limb Profiler Short Exposure First Packet Format 211
Figure 4.3-46. OMPS Grouped Diagnostic Limb Profiler Short Exposure Middle Packet Format 211
Figure 4.3-47. OMPS Grouped Diagnostic Limb Profiler Short Exposure Last Packet Format 212
Figure 4.3-48. OMPS Grouped Diagnostic Limb Profiler Short Exposure First Packet Format 212
Figure 4.3-49. Ungrouped Diagnostic Nadir Total Column Calibration Packet Format..... 218
Figure 4.3-50. OMPS First Grouped Diagnostic Nadir Total Column Calibration First Packet Format 219
Figure 4.3-51. OMPS Grouped Diagnostic Nadir Total Column Calibration Middle Packet Format 219
Figure 4.3-52. OMPS Grouped Diagnostic Nadir Total Column Calibration Last Packet Format 220
Figure 4.3-53. OMPS Grouped Diagnostic Nadir Total Column Calibration First Packet Format 220
Figure 4.3-54. OMPS Ungrouped Diagnostic Nadir Profiler Calibration Packet Format 226
Figure 4.3-55. OMPS First Grouped Diagnostic Nadir Profiler Calibration First Packet Format 227
Figure 4.3-56. OMPS Grouped Diagnostic Nadir Profiler Calibration Middle Packet Format 227

Check the JPSS MIS Server at https://jpssmis.gsfc.nasa.gov/frontmenu_dsp.cfm to verify that this is the correct version prior to use.

Figure 4.3-57. OMPS OMPS Grouped Diagnostic Nadir Profiler Calibration Last Packet Format 228
Figure 4.3-58. OMPS Grouped Diagnostic Nadir Profiler Calibration First Packet Format..... 228
Figure 4.3-59. OMPS Ungrouped Diagnostic Limb Profiler Calibration Packet Format 234
Figure 4.3-60. OMPS First Grouped Diagnostic Limb Profiler Calibration First Packet Format 235
Figure 4.3-61. OMPS Grouped Diagnostic Limb Profiler Calibration Middle Packet Format. 235
Figure 4.3-62. OMPS Grouped Diagnostic Limb Profiler Calibration Last Packet Format..... 236
Figure 4.3-63. OMPS Grouped Diagnostic Limb Profiler Calibration First Packet Format 236
Figure 4.3-64. OMPS Dwell Packet Format 242
Figure 4.3-65. OMPS First Grouped Memory/Table Dump First Packet Format 245
Figure 4.3-66. OMPS Memory/Table Dump Middle Packet Format 245
Figure 4.3-67. OMPS OMPS Memory/Table Dump Last Packet Format 246
Figure 4.3-68. OMPS Grouped Memory/Table Dump First Packet Format 246
Figure 4.3-69. OMPS Test Telemetry Packet Format 248
Figure 4.4-1. VIIRS Sensor ANTI-Solar/Travel-Direction Sides & OMM Interface Mounts.. 250
Figure 4.4-2. VIIRS Simplified Design Concept 250
Figure 4.4-3. VIIRS Subsystem Overview with 2-alpha Ids 253
Figure 4.4-4. VIIRS Sensor Mode Transition Diagram 255
Figure 4.4-5. VIIRS Scanning Geometry for Science Data 266
Figure 4.4-6. VIIRS Overview of Science Data Processing in Operational Mode 268
Figure 4.4-7. VIIRS Overview Of Aggregation & Aggregation Zones For Single Gain/Imaging Hrd – Operational Mode 269
Figure 4.4-8. VIIRS Overview of Aggregation Zone Definition 269
Figure 4.4-9. VIIRS Band Reconstruction Diagram 273
Figure 4.4-10. VIIRS Reconstruction Of Imaging Bands That Have Moderate Resolution Bands As Predictors 274
Figure 4.4-11. VIIRS Piecewise Linear Function Resulting From Dual Gain Processing & Offset Required For Correction Of Data 275
Figure 4.4-12. VIIRS Processing Flow For Extraction Of Operational Mode Data From Science Data Packets 276
Figure 4.4-13. VIIRS Packet Structure & Definition Of Terms For Day Night Band (DNB) – Operational Mode 277
Figure 4.4-14. VIIRS DNB Processing Flow – Operational Mode 278
Figure 4.4-15. VIIRS Science First Packet Format 279
Figure 4.4-16. VIIRS Science Middle Packet Format 280
Figure 4.4-17. VIIRS Science Last Packet Format 280
Figure 4.4-18. VIIRS Calibration Data Packet Structure 286
Figure 4.4-19. VIIRS Top-Level Format of Detector Field in Calibration Packet – Operational Mode 286
Figure 4.4-20. VIIRS Top-Level Format of Detector Data Field in Calibration Packet – Diagnostic Mode 287
Figure 4.4-21. VIIRS Calibration Data Packet Processing – Operational Mode 287
Figure 4.4-22. VIIRS Calibration Data Packet Processing – Diagnostic Mode 288
Figure 4.4-23. VIIRS Calibration First Packet Format 289
Figure 4.4-24. VIIRS Calibration Middle Packet Format 289

Check the JPSS MIS Server at https://jpssmis.gsfc.nasa.gov/frontmenu_dsp.cfm to verify that this is the correct version prior to use.

Figure 4.4-25. VIIRS Calibration Last Packet Format 290
Figure 4.4-26. VIIRS Engineering Data Packet Format 293
Figure 4.4-27. VIIRS Overview of Science Data Processing in Diagnostic Mode 316
Figure 4.4-28. VIIRS Overview Of Data Handling In Diagnostic Mode 317
Figure 4.4-29. VIIRS Science Data Packet Processing Overview – Diagnostic Mode 318
Figure 4.4-30. VIIRS Format Of DNB Data When In Diagnostic Mode 319
Figure 4.4-31. VIIRS DNB Processing Flow – Diagnostic Mode 321
Figure 4.4-32. VIIRS Diagnostic First Packet Format 322
Figure 4.4-33. VIIRS Diagnostic Middle Packet Format 323
Figure 4.4-34. VIIRS Diagnostic Last Packet Format 324
Figure 4.4-35. VIIRS Ungrouped Memory Dump Packet Format 329
Figure 4.4-36. VIIRS Grouped Memory Dump First Packet Format 329
Figure 4.4-37. VIIRS Grouped Memory Dump Middle Packet Format 330
Figure 4.4-38. VIIRS Grouped Memory Dump Last Packet Format 330
Figure 4.4-39. VIIRS Test Packet Format 332
Figure 4.5-1. CERES Instrument 333
Figure 4.5-2. CERES Exploded View 334
Figure 4.5-3. CERES Simplified Mode Diagram 338
Figure 4.5-4. CERES Normal Earth Scan Elevation Profile 339
Figure 4.5-5. CERES Solar Calibration Scan Elevation Profile 340
Figure 4.5-6. CERES Science Data Packet Format 342
Figure 4.5-7. CERES Calibration Data Packet Format 365
Figure 4.5-8. CERES Diagnostic Packet Format 366
Figure 4.6-1. Spacecraft Test / Fill Packet Format 387
Figure 4.6-2. Spacecraft Attitude & Ephemeris Packet Format 387

List of Tables

Table 3.1-1. NPP Virtual Channel Assignments to Downlinks 6
Table 3.1-2. NPP Mission Data Packet Assignments (APID to VCID map) 7
Table 3.2-1. NPP Satellite Modes 15
Table 3.2-2. NPP Operational Modes and Instrument Modes 16
Table 4.1-1. ATMS Redundancy Configurations 20
Table 4.1-2. ATMS Mission Data Packet Types 22
Table 4.1-3. NPP Universal Time Code Format 24
Table 4.1-4. ATMS PRT Parameters 25
Table 4.1-5. ATMS Science Packet User Data Fields 29
Table 4.1-6. ATMS Calibration Packet User Data Fields 32
Table 4.1-7. ATMS Hot Cal Temperature Engineering Packet User Data Fields 38
Table 4.1-8. ATMS Health and Status Engineering Packet User Data Fields 40
Table 4.1-9. ATMS Diagnostic Packet User Data Fields 45
Table 4.1-10. ATMS Dwell Packet User Data Fields 53
Table 4.1-11. ATMS Memory Dump Packet User Data Fields 59
Table 4.2-1. CrIS Spectral Band Coverage and Resolution 65
Table 4.2-2. CrIS Mission Data Packet Types 70

Check the JPSS MIS Server at https://jpssmis.gsfc.nasa.gov/frontmenu_dsp.cfm to verify that this is the correct version prior to use.

Table 4.2-3. CrIS Operational Interferogram Samples by IR Band 74
Table 4.2-4. CrIS Default Bit Trimming Output 75
Table 4.2-5. CrIS Interferometer Packet User Data Fields 77
Table 4.2-6. CrIS Science/Calibration Telemetry Packet User Data Fields 81
Table 4.2-7. CrIS Engineering Packet User Data Fields 95
Table 4.2-8. CrIS Diagnostic Interferogram Samples by IR Band 102
Table 4.2-9. CrIS Diagnostic Interferogram Packet User Data Fields 104
Table 4.2-10. CrIS IM Telemetry Dwell Packet User Data Fields 108
Table 4.2-11. CrIS Housekeeping Telemetry Dwell Packet User Data Fields 112
Table 4.2-12. CrIS SSM Telemetry Dwell Packet User Data Fields 115
Table 4.2-13. CrIS Memory Dump Packet User Data Fields 119
Table 4.3-1. OMPS Mission Data Packet Types 123
Table 4.3-2. OMPS Hardware Tags 128
Table 4.3-3. OMPS Timestamp Offset 130
Table 4.3-4. OMPS Nadir Total Column Packet User Data Fields 135
Table 4.3-5. OMPS Nadir Profiler Packet User Data Fields 143
Table 4.3-6. OMPS Limb Profiler Long Exposure Packet User Data Fields 150
Table 4.3-7. OMPS Limb Profiler Short Exposure Packet User Data Fields 157
Table 4.3-8. OMPS Nadir Total Column Calibration Packet User Data Field 165
Table 4.3-9. OMPS Nadir Profiler Calibration Packet User Data Fields 173
Table 4.3-10. OMPS Limb Calibration Packet User Data Fields 180
Table 4.3-11. OMPS Diagnostic Nadir Total Column Packet User Data Fields 189
Table 4.3-12. OMPS Diagnostic Nadir Profiler Packet User Data Fields 197
Table 4.3-13. OMPS Diagnostic Limb Profiler Long Exposure Packet User Data Fields 205
Table 4.3-13. OMPS Diagnostic Limb Profiler Long Exposure Packet User Data Fields (cont) 209
Table 4.3-14. OMPS Diagnostic Limb Profiler Short Exposure Packet User Data Fields 213
Table 4.3-15. OMPS Diagnostic Nadir Total Column Calibration Packet User Data Fields 221
Table 4.3-16. OMPS Diagnostic Nadir Profiler Calibration Packet User Data Fields 229
Table 4.3-17. OMPS Diagnostic Limb Profiler Calibration Packet User Data Field 237
Table 4.3-18. OMPS Dwell Packet User Data Fields 243
Table 4.3-19. OMPS Memory/Table Dump Packet User Data Fields 247
Table 4.4-1. VIIRS 2-Alpha Subsystem IDs 252
Table 4.4-2. VIIRS Mission Data Packet Types 256
Table 4.4-3. Common APIDs Received from VIIRS per Mode 260
Table 4.4-4. VIIRS Science Data Packet Band Information 263
Table 4.4-5. VIIRS Gain, Detector, & Bit Summary for Science Data 264
Table 4.4-6. VIIRS Number of Pixels per Aggregation Zone for Single Gain Bands – Operational Mode 270
Table 4.4-7. VIIRS Number of Samples per Aggregation Zones for Dual Gain Bands – Operational Mode 270
Table 4.4-8. VIIRS Science Data Packet Band Transmission & Processing Order 271
Table 4.4-9. VIIRS Processing Summary for Differential Encoding 272
Table 4.4-10. VIIRS USES Compression Information 272
Table 4.4-11. VIIRS Science First Packet User Data Fields 281
Table 4.4-12. VIIRS Science Middle and Last Packet User Data Fields 282

Check the JPSS MIS Server at https://jpssmis.gsfc.nasa.gov/frontmenu_dsp.cfm to verify that this is the correct version prior to use.

Table 4.4-13. VIIRS Gain, Detector, and Bit Summary for Calibration Data 284
Table 4.4-14. VIIRS Calibration Packet User Data Fields (First then Middle/Last) 291
Table 4.4-15. VIIRS engineering packet descriptions 294
Table 4.4-16. VIIRS Arithmetic Processing Summary 316
Table 4.4-17. VIIRS Summary of Maximum Number of Samples in Aggregation Zone by Band Type 317
Table 4.4-18. VIIRS DNB Reference Information 319
Table 4.4-19. VIIRS Diagnostic First Packet User Data Fields 325
Table 4.4-20. VIIRS Diagnostic Middle and Last Packet User Data Fields 327
Table 4.4-21. VIIRS Memory Dump Packet User Data Fields 331
Table 4.5-1. CERES Mission Data Packet Types 336
Table 4.5-2. CERES Mission Data Packets by Internal Sequence 337
Table 4.5-3. CERES Science Data Packet User Data Fields 343
Table 4.5-4. CERES Engineering Data Samples 361
Table 4.5-5. CERES Diagnostic Packet User Data Fields 367
Table 4.6-1. Spacecraft Mission Data Packet Types 386
Table 4.6-2. Spacecraft Attitude & Ephemeris Packet User Data Fields 388

Check the JPSS MIS Server at https://jpssmis.gsfc.nasa.gov/frontmenu_dsp.cfm to verify that this is the correct version prior to use.

1. Introduction

1.1 Scope

This control book describes the data formats and contents of the National Polar-Orbiting Operational Environmental Satellite System (NPOESS) Preparatory Project (NPP) satellite mission data. Two wideband transmissions carry NPP mission data: the Stored Mission Data (SMD) and High-Rate Data (HRD). These transmissions are distinct from the narrowband data streams containing the satellite's housekeeping telemetry. Yet some narrowband content is present in the wideband transmissions. Descriptions in this control book are limited to data (at the packet level) unique to the wideband links. The Command and Telemetry (C&T) Handbook describes the narrowband content. In addition to providing information about the structure of the mission data, this document also describes the context of the data in terms of the scientific mission and the observatory of which it is a part. Thus, this document describes how and when each instrument outputs science, calibration, engineering, dwell and diagnostic data. Also included in the data unique to the wideband links are uploadable tables and memory loads. These are dumped through the wideband links though loaded through the narrowband links.

The document provides information to identify, distinguish and extract all of the X-band unique source packets from the satellite's mission data streams. This document will provide some information on conversion coefficients such as coefficients for converting counts to temperature, etc. The coefficient information provided is limited to the relatively static parameters need for ground processing that are not included as part of the X-band telemetry stream. It is outside the scope of this document to provide detailed information, such as calibration values, compression schemes, etc., required to interpret every data point inside the packets or to perform science data analyses. Instrument-specific documentation should be consulted for that information.

The X-band Data Format (DF) Interface Control Document (ICD) describes the top-level formats and data structures used by NPP. It is necessary for understanding the material covered here and has precedence over information presented in this document. For mission data, this document has precedence over all other related instrument documentation for the NPP program.

1.2 Responsibility/Configuration Management Process

During the NPP development and in-orbit checkout (IOC) phases, it is the responsibility of the National Aeronautical and Space Administration (NASA) to maintain the contents of this document. Because the packet content of both the SMD and HRD links are configurable on-orbit, the final release of this document will represent the satellite configuration at the time of the mission handover (launch plus 90 days).

This document will be maintained as a Class I document because its contents drive the design of the ground segments along with the X-band Data Format ICD. Information that will change frequently during the implementation and early orbit phases are maintained elsewhere as Class II document(s).

Check the JPSS MIS Server at https://jpssmis.gsfc.nasa.gov/frontmenu_dsp.cfm to verify that this is the correct version prior to use.

1.3 Document Organization

Section 1 is this introduction.

Section 2 lists the applicable documents and documents used as reference.

Section 3 describes the general characteristics of the Mission Data Systems. Provided is an overview of the mission data including processing, storage, and down linking of the data by the spacecraft. Also provided is a description of the spacecraft state, spacecraft modes, and instrument modes affecting the mission data streams.

Section 4 is the detailed description of the mission data formats for the five instruments: ATMS, CERES, CrIS, OMPS, and VIIRS. It also contains a section for selected data generated by the spacecraft.

Section 5 is a listing of acronyms and abbreviations used in this document.

1.4 Document Conventions

The following general conventions are used in this document:

- Byte and word numbers are counted from the first byte transmitted and start with zero (0).
- Bit numbers start with zero (0), which designates the most significant bit (MSB), the left-most bit, and the first bit transmitted (per CCSDS standards).
- All numbers shown are in decimal unless otherwise noted.
  0bnnn or b'nn' = binary, 0xnnnn or x'nnnn' = hexadecimal.
- The term spacecraft refers to the spacecraft bus and its subsystems (e.g. C&DH, attitude determination and control, RF, thermal, propulsion, power)
- The term satellite refers to the spacecraft plus the instruments.
- Instruments output mission data in packets. Some of the Instrument reference documents use the term "RDR" whereas this document consistently uses "packet".
- Grouped packets contain mission data exceeding the size of a single CCSDS packet. Some Instrument reference documents use the term "segmented" whereas this document consistently uses "grouped".
- The Data Types listed in the packets' User Data Field tables have the following meaning:

Abbreviation	Data Type
B	Bit Field
U	Unsigned Integer
S	Signed Integer
F	Floating Point

Check the JPSS MIS Server at https://jpssmis.gsfc.nasa.gov/frontmenu_dsp.cfm to verify that this is the correct version prior to use.

2. Documents

2.1 Applicable Documents

a. GSFC 429-04-02-28 NPP X-band Data Format Interface Control Document

b. GSFC 429-03-02-26 NPP Spacecraft Stored Mission Data Interface Control Document to the Norway Ground Station

c. GSFC 429-03-02-24 NPP Spacecraft High Rate Data Radio Frequency Interface Control Document to the Direct Broadcast Stations

2.2 Reference Documents

a. NGST D35853 NPOESS Data Mapping - APID, VCID, Downlink and Uplink

b. NGES Report 12114 Advanced Technology Microwave Sounder (ATMS) Command List and Description, Rev F.

c. NGES Report 12206, ATMS Instrument Functional Logic Diagrams, Rev C.

d. NGES Report 12115 Advanced Technology Microwave Sounder (ATMS) Engineering Telemetry Description, Rev G.

e. ITT 8196185 CrIS Command and Data Packet Dictionary, Rev J.

f. BATC IN0092-115 OMPS Command & Telemetry Handbook, version 10.18 Rev E.

g. Raytheon SAS EDD154640-104 VIIRS Command, Telemetry, Science & Engineering Data Description, Rev P.

h. 1553 Interface Requirements for NPOESS, D34470, 05/10/2005, Rev B.

i. Operations Concept Description VIIRS, OCD 154640-101, Rev D.

j. IN0092-132, On Orbit Operators Manual for the Ozone Mapping and Profiler Suite, Rev B.

k. NGES Report 12735, ATMS Instrument Operation and Maintenance Manual, Rev A.

l. ITT 8208948 CrIS Flight Operations Manual: Rev E.

m. Consultative Committee for Space Data Systems (CCSDS) Recommendations for Advanced Orbiting Systems Networks and Datalinks: Architectural Specification, 701.0-B-2

n. FT1394 System Interface Requirements Document, D34471

Check the JPSS MIS Server at https://jpssmis.gsfc.nasa.gov/frontmenu_dsp.cfm to verify that this is the correct version prior to use.

o. FT1394 S100 Technical Interface Requirements Document, D36381

p. TM-04-161A, ATMS Memory Interface technical memo, Rev A.

q. IN0092CCD-003B OMPS CCD Reference Figures.

r. IN0092SYS-101 OMPS Limb Data Rate.

s. IN0092SW-026A, OMPS Image Binning Algorithm.

t. D47745, CERES FM5 Instrument Operations Manual, Rev -.

u. CCSDS 121.0-B-1, Consultative Committee for Space Data Systems, Lossless Data Compression.

v. 3257-SYS306 BATC System Engineering Report, NPP Test Packet Operations for Instrument Table Dumps

w. IN0092-701, OMPS Flight Software (FSW) Users Manual, Rev J.

x. IN0092-133, OMPS Post-Delivery and On-Orbit Maintenance Manual, Rev D.

y. OMM154640-101, VIIRS Operations and Maintenance Manual, Rev. A.

z. NGES Report 14029, Calibration Data Book ATMS PFM P/N 1362460-1 S/N 302, Rev C

2.3 Other Related Documents

a. NPP Spacecraft C&T Handbook, BATC 568423, Rev C

b. GSFC 429-01-07-01 NPP Satellite Requirements Specification

c. GSFC 429-01-02-10 NPP Interface Requirements Document, Space Segment (SS) and Command, Control and Communications (C3S) Segment

Check the JPSS MIS Server at https://jpssmis.gsfc.nasa.gov/frontmenu_dsp.cfm to verify that this is the correct version prior to use.

3. Mission Data Systems

3.1 Mission Data Overview

Mission data are collected from each of the five instruments:

- Visible Infrared Imaging Radiometer Suite (VIIRS)
- Ozone Mapping Profiling Suite (OMPS)
- Cross-track Infrared Sounder (CrIS)
- Advanced Technology Microwave Sounder (ATMS)
- Clouds and the Earth's Radiant Energy System (CERES)

These data, along with spacecraft housekeeping (HSK) data, are merged and provided to the ground on a real-time 15 Mbps downlink, called HRD direct broadcast. Instrument and HSK data are also provided to the Solid State Recorder (SSR) for onboard storage and playback as SMD.

The SMD are stored in the spacecraft's Solid State Recorder (SSR) and downlinked at 300 Mbps through playback of the SSR once per orbit over the NPOESS Svalsat ground station in Svalbard, Norway. The SMD stream contains:

- Science and calibration data from the NPP instruments;
- Diagnostic data from the NPP instruments when commanded;
- Engineering data from the instruments;
- Spacecraft attitude and ephemeris data, and
- Satellite housekeeping data (a superset of the stored state of health telemetry from the spacecraft and sensors containing higher-rate sampling of many measurements).

The HRD stream is similar to the SMD as it consists of instrument science, calibration and engineering data, but it does not contain data from instrument diagnostic activities. The HRD is constantly transmitted in real time by the spacecraft to distributed direct-broadcast users. Output to the HRD transmitter is at a constant 15 Mbps rate. Fill data are added as needed to maintain that rate. The HRD stream is not stored separately on the spacecraft, but its content is a subset of the SMD stored on the SSR.

3.1.1 Spacecraft Processing Of Mission Data

The spacecraft performs several processing functions of the NPP mission data:

- Provides a data collection/filtering/formatting/multiplexing operation;
- Provides CCSDS formatting for the Stored Mission Data;
- Provides CCSDS formatting for the High Rate Data.

The spacecraft collects the science and HSK data from the instruments and HSK, ephemeris, and attitude data from the spacecraft components. The data is then merged together to form the contents of the HRD and SMD. A filter capability is provided to selectively exclude data from

Check the JPSS MIS Server at https://jpssmis.gsfc.nasa.gov/frontmenu_dsp.cfm to verify that this is the correct version prior to use.

either, or both channels. This data filtering capability provides the mission operations team a means of maintaining the 15 Mbps HRD rate in the event an operational mode exceeds this maximum rate while allowing higher rate data to be recorded as SMD. The spacecraft formats the SMD and HRD independently due to the different interfaces with the separate transmitters. The X-band Data Format Interface Control Document describes the details of the formatting processes.

The filter capability mentioned above is achieved through satellite, user-configurable tables. These tables assign specific application process identifiers (APIDs) to a specific Virtual Channel (VC), and assign specific VC Identifiers (VCIDs) to the HRD, SMD or both mission data streams. Table 3.1-1 shows the current mapping of virtual channels to HRD and SMD. Table 3.1-2 then shows the mapping of APIDs to VCIDs.

Table 3.1-1. NPP Virtual Channel Assignments to Downlinks

VCID	Downlink	Virtual Channel Content	Description
0	SMD & HRD	Satellite Housekeeping Data	Satellite HSK common to HRD & SMD
1	SMD & HRD	ATMS RDR Science/Cal/Eng	ATMS mission data common to HRD & SMD
2	SMD	ATMS RDR Science/Cal/Eng	ATMS mission data specific to SMD
3	SMD	ATMS Diagnostic	ATMS diagnostic data routed to SMD only
4	HRD	ATMS RDR Science/Cal/Eng	ATMS mission data specific to HRD
5		Reserved	Reserved / Spare for ATMS
6	SMD & HRD	CrIS RDR Science/Cal/Eng	CrIS mission data common to HRD & SMD
7	SMD	CrIS RDR Science/Cal/Eng	CrIS mission data specific to HRD
8	SMD	CrIS Diagnostic RDR Science and Test Packets	CrIS diagnostic RDR data and Test Packets routed to SMD only
9	HRD	VC 9 Test Packet (spacecraft)	Spacecraft Test
10		Reserved	Reserved / Spare
11	SMD & HRD	OMPS RDR Science/Cal/Eng	OMPS mission data common to HRD & SMD
12	SMD	OMPS RDR Science/Cal/Eng/Diagnostic	OMPS mission data specific to SMD
13	SMD	OMPS Diagnostic	OMPS diagnostic data routed to SMD only
14	HRD	OMPS RDR Science/Cal/Eng	OMPS mission data specific to HRD
15		Reserved	Reserved / Spare for OMPS
16	SMD & HRD	VIIRS RDR Science/Cal/Eng	VIIRS mission data common to HRD & SMD
17	SMD	VIIRS RDR Science/Cal/Eng	VIIRS mission data specific to SMD
18	SMD	VIIRS Diagnostic	VIIRS diagnostic data routed to SMD only
19	HRD	VIIRS RDR Science/Cal/Eng	VIIRS mission data specific to HRD
20		Reserved	Reserved / Spare for VIIRS
21	SMD	Instrument Memory Dump/Dwell	Instrument Memory Dump/Dwell data
22		Reserved	Reserved for possible future use
23	SMD & HRD	CERES RDR Sci/Cal/Eng	CERES mission data common to HRD&SMD
24	SMD	CERES RDR Sci/Cal/Eng/Diagnostic	CERES mission data specific to SMD
25	SMD	CERES Diagnostic	CERES diagnostic data routed to SMD only
26	HRD	CERES RDR Sci/Cal/Eng	CERES mission data specific to HRD
27-31		Reserved	Reserved for possible future use
32-62		Unused / Not Available	Not available for use on NPP
63	HRD	Fill Data	Fill VCDU to maintain 15-Mbps HRD rate

Check the JPSS MIS Server at https://jpssmis.gsfc.nasa.gov/frontmenu_dsp.cfm to verify that this is the correct version prior to use.

Table 3.1-2 below lists the NPP data packets in order by APID. It lists their current assignment to a virtual channel and notes whether the packets inclusion in SMD or HRD is normal or only under special circumstances. The APIDs not listed are either spare/reserved APIDs or APIDs used for instrument commanding.

Table 3.1-2. NPP Mission Data Packet Assignments (APID to VCID map)

Packet APID		Source	VCID	Packet Description	SMD Use	HRD Use
Dec	Hex					
0	0	S/C	0	Bus Critical Telemetry	Normal	Normal
1	1	S/C	0	Bus H&S Telemetry – high rate	Normal	Normal
2	2	S/C	0	Bus H&S Telemetry – low rate	Normal	Normal
3	3	S/C	0	Bus DTU Telemetry	Normal	Normal
4	4	S/C	0	Bus Thermal Telemetry	Normal	Normal
5	5	S/C	0	SSR Telemetry	Normal	Normal
6	6	S/C	0	PUMA Telemetry	Normal	Normal
7	7	S/C	0	DSEP Telemetry	Normal	Normal
8	8	S/C	0	ADCS HSK Telemetry – high rate	Normal	Normal
9	9	S/C	0	ADCS HSK Telemetry – low rate	Normal	Normal
10	A	S/C	0	Time of Day Message packet	Normal	Normal
11	B	S/C	0	Ephemeris/Attitude Message packet	Normal	Normal
12	C	S/C	0	ADCS Diagnostic Telemetry	Normal	Normal
13	D	S/C	0	Bus FSW Telemetry – fast	Normal	Normal
14	E	S/C	0	Bus FSW Telemetry – slow	Normal	Normal
16	10	S/C	0	High Rate Star Tracker Telemetry	Normal	Normal
17	11	S/C	0	FSW Diagnostic Telemetry #1,	Normal	Normal
18	12	S/C	0	FSW Diagnostic Telemetry #2,	Normal	Normal
19	13	S/C	0	1394 / Firewire Diagnostic	Normal	Normal
20	14	S/C	0	ADCS Diagnostic,	Normal	Normal
21	15	S/C	0	ADCS Diagnostic,	Normal	Normal
22	16	S/C	0	FSW Diagnostic,	Normal	Normal
23	17	S/C	0	FSW Diagnostic,	Normal	Normal
24	18	S/C	0	FSW Diagnostic,	Normal	Normal
25	19	S/C	0	Spare	None	None
26	1A	S/C	0	SCC Short Table Dump packet	Special	Special
27	1B	S/C	0	CDP Short Table Dump packet	Special	Special
28	1C	S/C	0	SCC Long Table Dump packet	Special	Special
29	1D	S/C	0	CDP Long Table Dump packet	Special	Special
30	1E	S/C	0	SCC FSW Startup & Kernel Frame	Special	Special
31	1F	S/C	0	DTU Test Mode Telemetry	Special	Special
32	20	S/C	0	SCC Fault Frame packet	Special	Special
33	21	S/C	0	SCC Fault Frame packet	Special	Special
34	22	S/C	0	SCC Fault Frame packet	Special	Special
35	23	S/C	0	SCC Fault Frame packet	Special	Special
36	24	S/C	0	SCC Fault Frame packet	Special	Special
37	25	S/C	0	SCC Fault Frame packet	Special	Special
38	26	S/C	0	SCC Fault Frame packet	Special	Special
39	27	S/C	0	SCC Fault Frame packet	Special	Special

Check the JPSS MIS Server at https://jpssmis.gsfc.nasa.gov/frontmenu_dsp.cfm to verify that this is the correct version prior to use.

40	28	S/C	0	CDP FSW Startup Frame	Special	Special
41	29	S/C	0	CDP Fault Frame packet	Special	Special
42	2A	S/C	0	CDP Fault Frame packet	Special	Special
43	2B	S/C	0	CDP Fault Frame packet	Special	Special
44	2C	S/C	0	CDP Fault Frame packet	Special	Special
45	2D	S/C	0	CDP Fault Frame packet	Special	Special
46	2E	S/C	0	CDP Fault Frame packet	Special	Special
47	2F	S/C	0	CDP Fault Frame packet	Special	Special
48	30	S/C	0	CDP Fault Frame packet	Special	Special
49	31	S/C	0	CDP Fault Frame packet	Special	Special
50	32	S/C	1	Maneuver Go/No-Go	Normal	None
65	41	S/C	0	High Rate Gyro Data Telemetry Packet (special APID used only in S-TLM)	Normal	None
70	46	S/C	0	1394 Housekeeping packet	Special	Special
100	64	S/C	0	S/C Test / Fill packet	Special	Special
101	65	S/C	1	S/C Test / Fill packet	Special	Special
102	66	S/C	2	S/C Test / Fill packet	Special	None
103	67	S/C	3	S/C Test / Fill packet	Special	None
104	68	S/C	4	S/C Test / Fill packet	None	Special
105	69	S/C	5	S/C Test / Fill packet	None	None
106	6A	S/C	6	S/C Test / Fill packet	Special	Special
107	6B	S/C	7	S/C Test / Fill packet	Special	None
108	6C	S/C	8	S/C Test / Fill packet	Special	None
109	6D	S/C	9	S/C Test / Fill packet	None	Special
110	6E	S/C	10	S/C Test / Fill packet	None	None
111	6F	S/C	11	S/C Test / Fill packet	Special	Special
112	70	S/C	12	S/C Test / Fill packet	Special	None
113	71	S/C	13	S/C Test / Fill packet	Special	None
114	72	S/C	14	S/C Test / Fill packet	None	Special
115	73	S/C	15	S/C Test / Fill packet	None	None
116	74	S/C	16	S/C Test / Fill packet	Special	Special
117	75	S/C	17	S/C Test / Fill packet	Special	None
118	76	S/C	18	S/C Test / Fill packet	Special	None
119	77	S/C	19	S/C Test / Fill packet	None	Special
120	78	S/C	20	S/C Test / Fill packet	None	None
121	79	S/C	21	S/C Test / Fill packet	Special	None
146	92	CERES	0	Housekeeping	Normal	Normal
147	93	CERES	24	Calibration	Normal	None
148	94	CERES	24	Fixed Pattern	Special	None
149	95	CERES	24	Science	Normal	None
150	96	CERES	24	Diagnostic	Special	None
155	9B	CERES	0	LEO&A Housekeeping	Normal	Normal
512	200	ATMS	0	Command Status	Normal	Normal
513	201	ATMS	0	LEO&A Housekeeping	Normal	Normal
514	202	ATMS	3	Test	Special	None
515	203	ATMS	1	Calibration	Normal	Normal
516	204	ATMS	3	Diagnostic	Special	None
517	205	ATMS	21	Dwell	Special	None

518	206	ATMS	0	Housekeeping	Normal	Normal
524	20C	ATMS	21	Memory Dump	Special	None
528	210	ATMS	1	Science	Normal	Normal
530	212	ATMS	1	Engineering – Hot Cal	Normal	Normal
531	213	ATMS	1	Engineering – Health & Status	Normal	Normal
536	218	ATMS	3	Diagnostic Science	Special	None
543	21F	ATMS	0	Hardware Error Status	Normal	Normal
544	220	OMPS	0	Housekeeping	Normal	Normal
545	221	OMPS	0	LEO&A Housekeeping	Normal	Normal
546	222	OMPS	13	Test	Special	None
549	225	OMPS	21	Dwell	Special	None
550	226	OMPS	0	Diagnostic – FSW Bootup Status	Special	None
556	22C	OMPS	21	Memory Dump	Special	None
560	230	OMPS	11	Science – Nadir Total Column	Normal	Normal
561	231	OMPS	11	Science – Nadir Profiler	Normal	Normal
562	232	OMPS	12	Science – Limb Profiler, Long Exposure	Normal	None
563	233	OMPS	12	Science – Limb Profiler, Short Exposure	Normal	None
564	234	OMPS	11	Science – Nadir Total Column Calibration	Normal	Normal
565	235	OMPS	11	Science – Nadir Profiler Calibration	Normal	Normal
566	236	OMPS	12	Science – Limb Profiler Calibration	Normal	None
576	240	OMPS	11	Diagnostic – Nadir Total Column	Special	Special
577	241	OMPS	13	Diagnostic – Nadir Profiler	Special	None
578	242	OMPS	13	Diagnostic – Limb Profiler Long	Special	None
579	243	OMPS	13	Diagnostic – Limb Profiler Short	Special	None
580	244	OMPS	13	Diagnostic – Total Column Calibration	Special	None
581	245	OMPS	13	Diagnostic – Nadir Profiler Calibration	Special	None
582	246	OMPS	13	Diagnostic – Limb Profiler Calibration	Special	None
768	300	VIIRS	0	Housekeeping	Normal	Normal
769	301	VIIRS	0	LEO&A Housekeeping	Normal	Normal
770	302	VIIRS	18	Test Packet	Special	None
773	305	VIIRS	0	Diagnostic Housekeeping Telemetry	Special	Special
780	30C	VIIRS	21	Memory Dump	Special	None
800	320	VIIRS	16	HRD – M04 (Operational Day Only)	Normal	Normal
801	321	VIIRS	16	HRD – M05 (Operational Day Only)	Normal	Normal
802	322	VIIRS	16	HRD – M03 (Operational Day Only)	Normal	Normal
803	323	VIIRS	16	HRD – M02 (Operational Day Only)	Normal	Normal
804	324	VIIRS	16	HRD – M01 (Operational Day Only)	Normal	Normal
805	325	VIIRS	16	HRD – M06 (Operational Day Only)	Normal	Normal
806	326	VIIRS	17	HRD – M07 (Operational Day and Night)	Normal	None
807	327	VIIRS	16	HRD – M09 (Operational Day Only)	Normal	Normal
808	328	VIIRS	16	HRD – M10 (Operational Day and Night)	Normal	Normal
809	329	VIIRS	16	HRD – M08 (Operational Day and Night)	Normal	Normal
810	32A	VIIRS	16	HRD – M11 (Operational Day and Night) [2]	Normal	Normal
811	32B	VIIRS	16	HRD – M13 (Operational Day and Night)	Normal	Normal
812	32C	VIIRS	16	HRD – M12 (Operational Day and Night)	Normal	Normal
813	32D	VIIRS	16	HRD – I04 (Operational Day and Night)	Normal	Normal
814	32E	VIIRS	16	HRD – M16 (Operational Day and Night)	Normal	Normal
815	32F	VIIRS	16	HRD – M15 (Operational Day and Night)	Normal	Normal

816	330	VIIRS	16	HRD – M14 (Operational Day and Night)	Normal	Normal
817	331	VIIRS	16	HRD – I05 (Operational Day and Night)	Normal	Normal
818	332	VIIRS	16	HRD – I01 (Operational Day Only)	Normal	Normal
819	333	VIIRS	16	HRD – I02 (Operational Day Only)	Normal	Normal
820	334	VIIRS	16	HRD – I03 (Operational Day Only)	Normal	Normal
821	335	VIIRS	16	HRD – DNB (Operational Day and Night)	Normal	Normal
822	336	VIIRS	16	HRD – DNB MGS (Operational Night Only)	Normal	Normal
823	337	VIIRS	16	HRD – DNB LGS (Operational Night Only)	Normal	Normal
825	339	VIIRS	16	HRD Calibration (Operational Day and Night)	Normal	Normal
826	33A	VIIRS	16	HRD Engineering (Operational Day and Night)	Normal	Normal
830	33E	VIIRS	18	HRD – M04 (Diagnostic Mode)	Special	None
831	33F	VIIRS	18	HRD – M05 (Diagnostic Mode)	Special	None
832	340	VIIRS	18	HRD – M03 (Diagnostic Mode)	Special	None
833	341	VIIRS	18	HRD – M02 (Diagnostic Mode)	Special	None
834	342	VIIRS	18	HRD – M01 (Diagnostic Mode)	Special	None
835	343	VIIRS	18	HRD – M06 (Diagnostic Mode)	Special	None
836	344	VIIRS	18	HRD – M07 (Diagnostic Mode)	Special	None
837	345	VIIRS	18	HRD – M09 (Diagnostic Mode)	Special	None
838	346	VIIRS	18	HRD – M10 (Diagnostic Mode)	Special	None
839	347	VIIRS	18	HRD – M08 (Diagnostic Mode)	Special	None
840	348	VIIRS	18	HRD – M11 (Diagnostic Mode)	Special	None
841	349	VIIRS	18	HRD – M13 (Diagnostic Mode)	Special	None
842	34A	VIIRS	18	HRD – M12 (Diagnostic Mode)	Special	None
843	34B	VIIRS	18	HRD – I04 (Diagnostic Mode)	Special	None
844	34C	VIIRS	18	HRD – M16 (Diagnostic Mode)	Special	None
845	34D	VIIRS	18	HRD – M15 (Diagnostic Mode)	Special	None
846	34E	VIIRS	18	HRD – M14 (Diagnostic Mode)	Special	None
847	34F	VIIRS	18	HRD – I05 (Diagnostic Mode)	Special	None
848	350	VIIRS	18	HRD – I01 (Diagnostic Mode)	Special	None
849	351	VIIRS	18	HRD – I02 (Diagnostic Mode)	Special	None
850	352	VIIRS	18	HRD – I03 (Diagnostic Mode)	Special	None
851	353	VIIRS	18	HRD – DNB(Diagnostic Mode)	Special	None
852	354	VIIRS	18	HRD – DNB MGS (Diagnostic Mode)	Special	None
853	355	VIIRS	18	HRD – DNB LGS (Diagnostic Mode)	Special	None
855	357	VIIRS	18	HRD Calibration (Diagnostic Mode)	Special	None
856	358	VIIRS	18	HRD Engineering (Diagnostic Mode)	Special	None
1280	500	CrIS	0	Housekeeping #1	Normal	Normal
1281	501	CrIS	0	Housekeeping #2	Normal	Normal
1282	502	CrIS	0	Housekeeping #3	Normal	Normal
1283	503	CrIS	0	Housekeeping #4	Normal	Normal
1284	504	CrIS	0	Housekeeping #5	Normal	Normal
1285	505	CrIS	0	Housekeeping #6	Normal	Normal
1286	506	CrIS	0	Housekeeping #7	Normal	Normal
1287	507	CrIS	0	Housekeeping #8	Normal	Normal
1288	508	CrIS	0	LEO&A Housekeeping	Normal	Normal
1289	509	CrIS	6	Science Telemetry	Normal	Normal
1290	50A	CrIS	6	Engineering Telemetry	Normal	Normal
1291	50B	CrIS	21	Housekeeping Telemetry Dwell	Special	None

1292	50C	CrIS	21	SSM Telemetry Dwell	Special	None
1293	50D	CrIS	21	IFM Telemetry Dwell	Special	None
1294	50E	CrIS	8	LW Diagnostic RDR	Special	None
1295	50F	CrIS	8	MW Diagnostic RDR	Special	None
1296	510	CrIS	8	SW Diagnostic RDR	Special	None
1315	523	CrIS	6	LW 1 Earth Scene	Normal	Normal
1316	524	CrIS	6	LW 2 Earth Scene	Normal	Normal
1317	525	CrIS	6	LW 3 Earth Scene	Normal	Normal
1318	526	CrIS	7	LW 4 Earth Scene	Normal	None
1319	527	CrIS	6	LW 5 Earth Scene	Normal	Normal
1320	528	CrIS	6	LW 6 Earth Scene	Normal	Normal
1320 [1]	528	CrIS	7	LW 6 Earth Scene	Normal	None
1321	529	CrIS	6	LW 7 Earth Scene	Normal	Normal
1322	52A	CrIS	6	LW 8 Earth Scene	Normal	Normal
1323	52B	CrIS	6	LW 9 Earth Scene	Normal	Normal
1324	52C	CrIS	6	MW 1 Earth Scene	Normal	Normal
1325	52D	CrIS	6	MW 2 Earth Scene	Normal	Normal
1326	52E	CrIS	6	MW 3 Earth Scene	Normal	Normal
1327	52F	CrIS	7	MW 4 Earth Scene	Normal	None
1328	530	CrIS	6	MW 5 Earth Scene	Normal	Normal
1329	531	CrIS	6	MW 6 Earth Scene	Normal	Normal
1329 [1]	531	CrIS	7	MW 6 Earth Scene	Normal	None
1330	532	CrIS	6	MW 7 Earth Scene	Normal	Normal
1331	533	CrIS	6	MW 8 Earth Scene	Normal	Normal
1332	534	CrIS	6	MW 9 Earth Scene	Normal	Normal
1333	535	CrIS	6	SW 1 Earth Scene	Normal	Normal
1334	536	CrIS	6	SW 2 Earth Scene	Normal	Normal
1335	537	CrIS	6	SW 3 Earth Scene	Normal	Normal
1336	538	CrIS	7	SW 4 Earth Scene	Normal	None
1337	539	CrIS	6	SW 5 Earth Scene	Normal	Normal
1338	53A	CrIS	6	SW 6 Earth Scene	Normal	Normal
1338 [1]	53A	CrIS	7	SW 6 Earth Scene	Normal	None
1339	53B	CrIS	6	SW 7 Earth Scene	Normal	Normal
1340	53C	CrIS	6	SW 8 Earth Scene	Normal	Normal
1341	53D	CrIS	6	SW 9 Earth Scene	Normal	Normal
1342	53E	CrIS	6	LW 1 Deep Space	Normal	Normal
1343	53F	CrIS	6	LW 2 Deep Space	Normal	Normal
1344	540	CrIS	6	LW 3 Deep Space	Normal	Normal
1345	541	CrIS	7	LW 4 Deep Space	Normal	None
1346	542	CrIS	6	LW 5 Deep Space	Normal	Normal
1347	543	CrIS	6	LW 6 Deep Space	Normal	Normal
1347 [1]	543	CrIS	7	LW 6 Deep Space	Normal	None
1348	544	CrIS	6	LW 7 Deep Space	Normal	Normal
1349	545	CrIS	6	LW 8 Deep Space	Normal	Normal
1350	546	CrIS	6	LW 9 Deep Space	Normal	Normal

1351	547	CrIS	6	MW 1 Deep Space	Normal	Normal
1352	548	CrIS	6	MW 2 Deep Space	Normal	Normal
1353	549	CrIS	6	MW 3 Deep Space	Normal	Normal
1354	54A	CrIS	7	MW 4 Deep Space	Normal	None
1355	54B	CrIS	6	MW 5 Deep Space	Normal	Normal
1356	54C	CrIS	6	MW 6 Deep Space	Normal	Normal
1356 [1]	54C	CrIS	7	MW 6 Deep Space	Normal	None
1357	54D	CrIS	6	MW 7 Deep Space	Normal	Normal
1358	54E	CrIS	6	MW 8 Deep Space	Normal	Normal
1359	54F	CrIS	6	MW 9 Deep Space	Normal	Normal
1360	550	CrIS	6	SW 1 Deep Space	Normal	Normal
1361	551	CrIS	6	SW 2 Deep Space	Normal	Normal
1362	552	CrIS	6	SW 3 Deep Space	Normal	Normal
1363	553	CrIS	7	SW 4 Deep Space	Normal	None
1364	554	CrIS	6	SW 5 Deep Space	Normal	Normal
1365	555	CrIS	6	SW 6 Deep Space	Normal	Normal
1365 [1]	555	CrIS	7	SW 6 Deep Space	Normal	None
1366	556	CrIS	6	SW 7 Deep Space	Normal	Normal
1367	557	CrIS	6	SW 8 Deep Space	Normal	Normal
1368	558	CrIS	6	SW 9 Deep Space	Normal	Normal
1369	559	CrIS	6	LW 1 Internal Cal Target	Normal	Normal
1370	55A	CrIS	6	LW 2 Internal Cal Target	Normal	Normal
1371	55B	CrIS	6	LW 3 Internal Cal Target	Normal	Normal
1372	55C	CrIS	7	LW 4 Internal Cal Target	Normal	None
1373	55D	CrIS	6	LW 5 Internal Cal Target	Normal	Normal
1374	55E	CrIS	6	LW 6 Internal Cal Target	Normal	Normal
1374 [1]	55E	CrIS	7	LW 6 Internal Cal Target	Normal	None
1375	55F	CrIS	6	LW 7 Internal Cal Target	Normal	Normal
1376	560	CrIS	6	LW 8 Internal Cal Target	Normal	Normal
1377	561	CrIS	6	LW 9 Internal Cal Target	Normal	Normal
1378	562	CrIS	6	MW 1 Internal Cal Target	Normal	Normal
1379	563	CrIS	6	MW 2 Internal Cal Target	Normal	Normal
1380	564	CrIS	6	MW 3 Internal Cal Target	Normal	Normal
1381	565	CrIS	7	MW 4 Internal Cal Target	Normal	None
1382	566	CrIS	6	MW 5 Internal Cal Target	Normal	Normal
1383	567	CrIS	6	MW 6 Internal Cal Target	Normal	Normal
1383 [1]	567	CrIS	7	MW 6 Internal Cal Target	Normal	None
1384	568	CrIS	6	MW 7 Internal Cal Target	Normal	Normal
1385	569	CrIS	6	MW 8 Internal Cal Target	Normal	Normal
1386	56A	CrIS	6	MW 9 Internal Cal Target	Normal	Normal
1387	56B	CrIS	6	SW 1 Internal Cal Target	Normal	Normal
1388	56C	CrIS	6	SW 2 Internal Cal Target	Normal	Normal
1389	56D	CrIS	6	SW 3 Internal Cal Target	Normal	Normal
1390	56E	CrIS	7	SW 4 Internal Cal Target	Normal	None
1391	56F	CrIS	6	SW 5 Internal Cal Target	Normal	Normal

1392	570	CrIS	6	SW 6 Internal Cal Target	Normal	Normal
1392 [1]	570	CrIS	7	SW 6 Internal Cal Target	Normal	None
1393	571	CrIS	6	SW 7 Internal Cal Target	Normal	Normal
1394	572	CrIS	6	SW 8 Internal Cal Target	Normal	Normal
1395	573	CrIS	6	SW 9 Internal Cal Target	Normal	Normal
1397	575	CrIS	21	Memory Dump	Special	None
1398	576	CrIS	8	Test	Special	None

Note [1]: These duplicate rows show an alternate format to be used, at operations discretion, when HRD content is in danger of exceeding the 15Mbit/sec spacecraft limit.
Note [2]: Band M11 is not the flight software default for Op_Night, but has to be enabled via the SET_DP_BANDINDEX_TRANSMIT command. This default was selected for compatibility with ground until Block 2.0 is installed.

Note: The packet downlink rate is flight software configurable and therefore is not provided in this document.

3.1.2 Mission Data Storage

The spacecraft's Solid State Recorder provides back-orbit storage of the SMD between ground station contacts. The SSR contains 343 gigabits of memory accommodating more than 3.5 orbits of SMD input at an orbital average rate of approximately 10 Mbps. The recorder has separate record and playback pointers and supports simultaneous recording and playback operations. All data stored on the SSR are Reed-Solomon encoded for error detection and correction prior to being recorded.

3.1.3 Mission Data Downlinking

The two separate X-band downlinks carrying the satellite's mission data to the ground originate from two separate spacecraft transmitters. The HRD is downlinked constantly to Direct Broadcast Users, while the SMD is downlinked as playback from the SSR during satellite contacts with the Norway ground station. Figure 3.1-1 illustrates the NPP mission communications structure and the HRD and SMD links within that structure. Detailed information, including RF characteristics, may be found in the RF Interface Control Documents for HRD and SMD (refs. 2.1b and c) respectively.

Check the JPSS MIS Server at https://jpssmis.gsfc.nasa.gov/frontmenu_dsp.cfm to verify that this is the correct version prior to use.

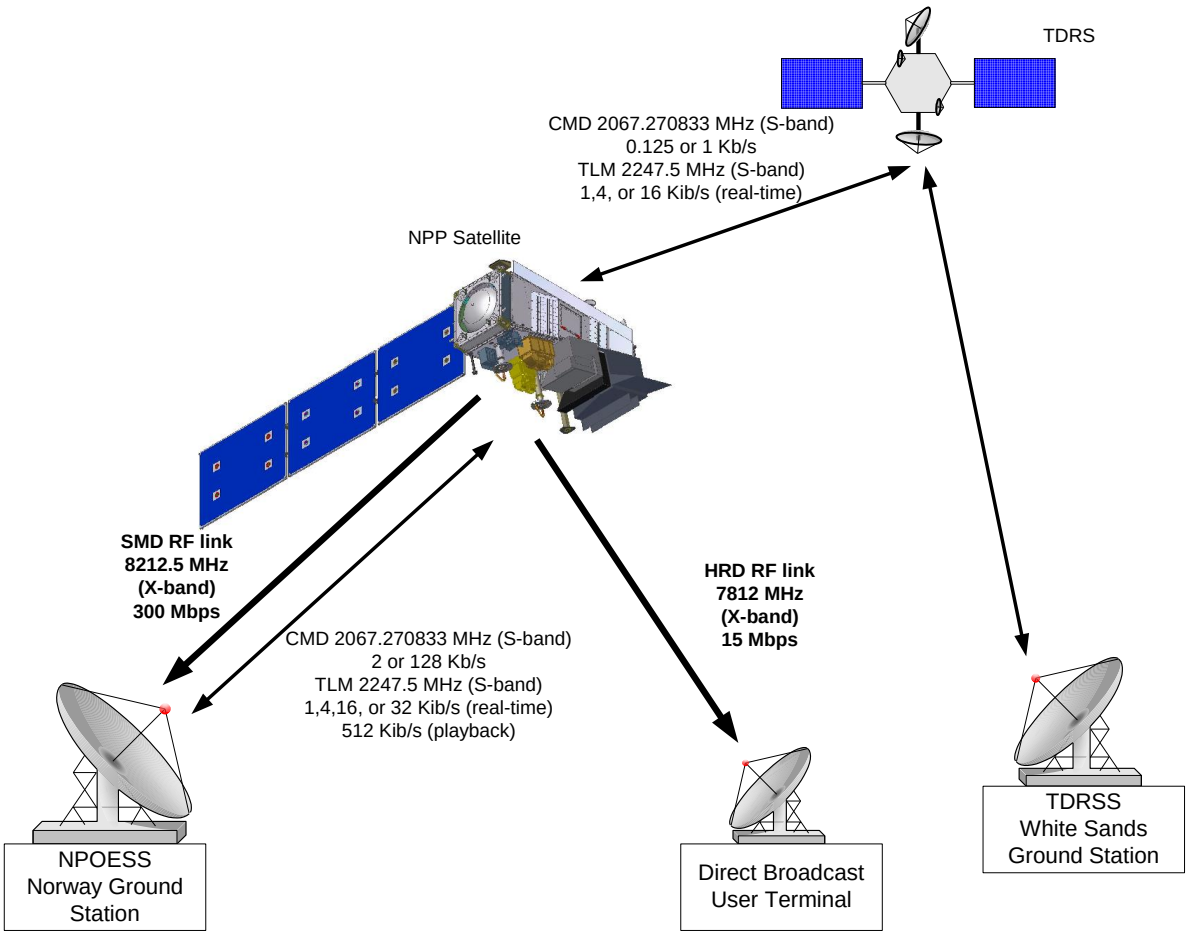

Figure 3.1-1. NPP Satellite Communication Links

3.1.4 HRD Fill Data

As mentioned, output to the HRD transmitter is at a constant 15 Mbps rate and fill data is added as needed to maintain that rate. The Fill Data is inserted at the Virtual Channel Data Unit (VCDU) level (Virtual Channel 63). Lower level (M_PDU and Packet level) formatting is not valid within the VCDU for Virtual Channel (VC) 63. VCDU data zone does not contain a M_PDU or a Source Packet, but the entire 886 octets contains the repeating pattern "0x0B" ("0b00001011").

3.2 Operational Modes

3.2.1 Satellite Modes

A "mode" defines the operational status of the satellite with the spacecraft and instruments commanded to a specific configuration to perform required operations. During a specific mission phase, the satellite may be operated in more than one mode. The mode dictates a specific spacecraft state, but the spacecraft state does not dictate a specific satellite mode (i.e., the S/C may be in Point State to support Science Mode, but the instruments and supporting

Check the JPSS MIS Server at https://jpssmis.gsfc.nasa.gov/frontmenu_dsp.cfm to verify that this is the correct version prior to use.

components must also be properly configured to support full Science Mode.) The mode requires the appropriate configuration of spacecraft state, components, and instrument operations.

The NPP satellite supports six (6) operational modes shown in Table 3.2-1 with mission data availability noted. Mission data are not available in Launch Mode. In Outgassing and Safe Modes, mission data collection depends on the instrument configuration.

Table 3.2-1. NPP Satellite Modes

Launch Mode	Spacecraft attitude is not controlled
	Instruments are powered off with survival heaters enabled
	No Mission Data available
Science Mode	Spacecraft maintains fine attitude pointing/determination (Point State).
	Instruments are on, commanded to appropriate operational mode
	Mission data collected and stored on Solid State Recorder (SSR)
	Real-time Science data transmitted on High Rate Data link
	Playback Stored Mission Data transmitted on X-band link
Science Calibration Mode	Spacecraft performs special calibration maneuvers, including roll, yaw and pitch-over
	Spacecraft remains in Point State
	Instruments are on, commanded to appropriate operational mode
	Inst. calibration data collected and stored on SSR
	HRD is suspended when pointing constraints exist
Orbit Adjust Mode	Spacecraft is in Delta-V State
	Spacecraft nominally exits Delta-V to Point State (non-thruster based mode)
	Instrument modes controlled via ground or stored command
	Mission data collected and stored on SSR (but instruments may be safed) HRD may be suspended due to pointing constraints
Safe Modes	
Safehold/Mission Point	Spacecraft in Point State, maintaining fine pointing attitude (nadir target) Instruments safed No mission data; Health &Safety data only
Safehold/Earth-Point	Spacecraft in Earth-Safe State, nadir pointing Instruments safed There is no or limited missiondata stored to SSR, H&S data only; HRD transmitter is off if payload bus is shed
Safehold/Sun-Point	Spacecraft in Sun-Safe State, sun point attitude Instruments safed No mission data,H&S data only. Defaults to 1K R/T critical telemetry
Survival/Sun-Point	Spacecraft in Sun-Safe State, sun point attitude Instruments safed (if possible), then all buses shed except Essential Bus No mission data; Defaults to1K R/T critical telemetry initially
Outgassing Mode	Spacecraft in Point or Earth-Safe State
	Instruments configured for outgassing or desired operational mode
	Mission data collected and stored on SSR when appropriate

Check the JPSS MIS Server at https://jpssmis.gsfc.nasa.gov/frontmenu_dsp.cfm to verify that this is the correct version prior to use.

3.2.2 Instrument Operational Modes

The instrument modes of operation are configurable by ground or stored command or by autonomous command for fault situations. The Mission Management Center (MMC) configures instruments to a number of operational modes within a given satellite mode as required.

Table 3.2-2 shows the relationship between instrument modes and satellite modes.

Table 3.2-2. NPP Operational Modes and Instrument Modes

NPP Mode	ADCS State	Inst. Power	ATMS	CrIS	OMPS	VIIRS	CERES
Launch	Wait	Off	Survival/Launch	Survival/Launch	Survival/Launch	Survival/Launch	Survival/Launch
Science	Point	On	Operational	Operational,	Operational	Operational, Diagnostic	Operational
Science Calibration	Point	On	Operational, Diagnostic	Operational, Diagnostic	Operational, Diagnostic**	Operational, Diagnostic	Operational, Diagnostic
Orbit Adjust	Delta-V	On	Operational*	Operational*	Operational*	Operational*	Operational*
SafeHold/ MPM	Point	On	Safe	Safe	Safe	Safe	Safe
SafeHold/ EPM (power fault)	Earth-Safe	Off	Survival	Survival	Survival	Survival	Survival
SafeHold/ EPM (non-power fault)	Earth-Safe	On	Safe	Safe	Safe	Safe	Safe
Survival/ SPM (power fault)	Sun-Safe	Off	Survival	Survival	Survival	Survival	Survival
SafeHold/ SPM (non-power fault)	Sun-Safe	On	Safe	Safe	Safe	Safe	Safe

NOTES:
* Instrument Mode during Orbit Adjust is at the instruments/operations team discretion. May remain Operational or be safed.
** OMPS can generate diagnostic APIDs but does not have a diagnostic 'mode'

The instruments output mission data only when in their Operational and Diagnostic Modes. The CrIS outputs a subset of its mission data – engineering and calibration data but not science data – in its Outgas and Safe Modes. Thus, in NPP Science and Science Calibration Mode, all instruments gather mission data according to their mode. No mission data are generated when NPP is in its Launch Mode and the MPM and power fault EPM SafeHold Modes. All the instruments generate mission data when in Orbit Adjust Mode unless the flight operations team configures them to Safe Mode. During the Orbit Adjust Mode, the non-power fault EPM, the CrIS, in its Safe or Outgas Mode, will produce a subset of its mission data.

4. Mission Data Formats

4.1 ATMS

4.1.1 Introduction

The ATMS is a 22-channel millimeter-wave radiometer measuring upwelling radiances in six frequency bands centered at 23 GHz, 31 GHz, 50-58 GHz, 89 GHz, 166 GHz, and 183 GHz. The ATMS is a total-power radiometer, with “through-the-antenna” radiometric calibration. A pair of antenna apertures, scanned by rotating flat-plate reflectors, collects radiometric data. Scanning is performed cross-track to the satellite motion from sun to anti-sun, using the "integrate-while scan" type data collection. The scan period is 8/3 second, synchronized to the Cross-track Infrared Sounder (CrIS) using a spacecraft-provided scan synchronization pulse. The ATMS is compatible with both the NPP and NPOESS satellite architectures.

The primary roles of the ATMS are to obtain data during overcast conditions, to provide corrections for cloud effects in partly cloudy conditions, and to provide a “first-guess” for iterative physical retrievals. Processed mission data from the ATMS and the CrIS produce EDR(s) containing the following types of data:

- Atmospheric Temperature Profiles
- Atmospheric Moisture Profiles
- Atmospheric Pressure Profiles

4.1.2 Instrument Function

The ATMS physical configuration consists of two major modular assemblies: an upper assembly and a lower assembly. The upper assembly includes the antenna, scan drive, and receiver components, mounted on a precision optical bench. The lower assembly contains the power supplies, scan drive electronics, and the signal processing electronics. It also provides the base plate for the spacecraft mechanical and thermal interface. The lower and upper assemblies are bolted and pinned together; pinning of the assemblies allows disassembly and reassembly without disturbing initial alignment. The lower assembly electronics boxes mount to the base plate, which provides the mechanical/thermal interface to the spacecraft.

The block diagram in Figure 4.1-1 shows the functional decomposition into subassemblies and the signal flow interfaces. Lower levels of block diagrams and circuitry descriptions are provided in the ATMS Instrument Functional Logic Diagrams (ref 2.2c).

The antenna subsystem provides the RF signals to the receiver, for both earth-viewing scene data and hot and cold calibration samples. The antenna subsystem includes the parabolic reflecting elements and feedhorns, which establish the antenna beam characteristics, and polarizing grids and diplexers, which multiplex the signals into six bands. The hot calibration targets --one for K, Ka and V-bands (KAV_WL) and one for W and G-band (WG_WL) -- and associated temperature sensors are also part of the antenna subsystem. The antenna pattern when viewing cold space establishes the cold calibration performance.

Check the JPSS MIS Server at https://jpssmis.gsfc.nasa.gov/frontmenu_dsp.cfm to verify that this is the correct version prior to use.

The scan drive subsystem includes the Scan Drive Mechanism (SDM) and the Scan Drive Electronics (SDE). Telemetry from the SDM reports on the main motor, the compensation motor and resolver. The flat reflectors attached to the SDM have shrouds to ensure a stable thermal load for the hot calibration targets. The SDE performs the servo control functions according to a stored scan angle profile, which can be updated during the mission. The SDE receives scan pattern uploads and scan synchronization pulses from the Signal Processing Assembly (SPA), and provides boundary pulses at the beginning of each scan position to control data sampling and integration. It also provides angle position data for the center of each scan position.

The receiver subsystem amplifies and down-converts the radiometric RF signals from the antenna, and performs filtering and square-law detection of all 22 channels. The receiver subsystem is divided into four shelves: K/Ka-band, V-band, W-band and G-band – plus its own power supply. The shelf components are receiver front ends (RFE), local oscillators – an oven controlled crystal oscillator (OCXO), a cavity stabilized oscillator (CSO), a phase lock-loop oscillator (PLO or PLLO) and a Gunn Diode oscillator (GDO) – intermediate frequency (IF) modules, filters and square-law detectors in the video output units.

The video outputs of all channels are sent to the SPA in the electronics subsystem. The Video Digitizer (VD) performs analog multiplexing and digitization of the radiometric video signals. The housekeeping Circuit Card Assembly collects and digitizes housekeeping data from all of the ATMS subsystems. In conjunction with hosted flight software, the Digital Signal Processor (DSP) performs digital integration of the VD outputs over the sampling period, creates science and housekeeping data packets for communication to the spacecraft over the 1553B interface, processes commands received over this interface, and controls instrument operation.

The Power Distribution Assembly performs EMI filtering and transient suppression for the 28 V operational power. All electrical interfaces with the spacecraft (power, 1553B Command and Telemetry (C&T), pulse commands, and analog telemetry) are through the electronics subsystem.

The thermal control subsystem provides passive thermal control of the instrument with Multi-layered Insulation (MLI) blankets on exterior surfaces and efficient conductive coupling to the spacecraft cold plate. It also provides dual-redundant thermostatically-controlled survival heaters.

Check the JPSS MIS Server at https://jpssmis.gsfc.nasa.gov/frontmenu_dsp.cfm to verify that this is the correct version prior to use.

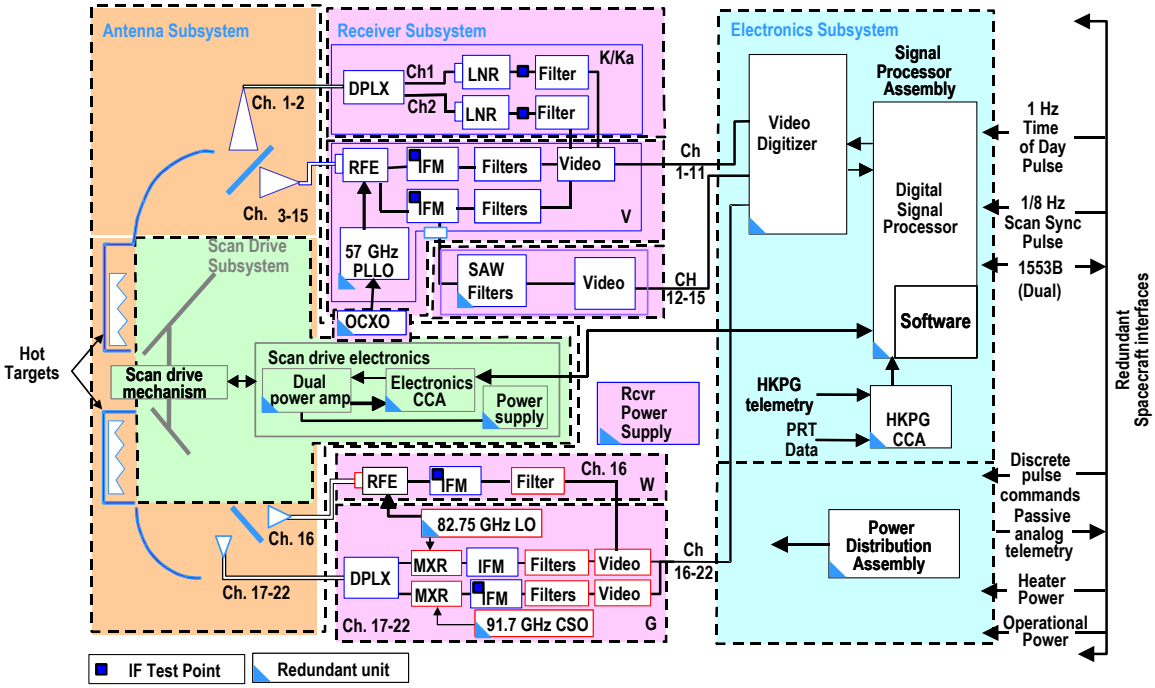

Figure 4.1-1. ATMS Block Diagram

The design incorporates redundancy for all components of the electronics subsystem, the scan drive electronics, and the receiver power supply and local oscillators. Figure 4.1-2 illustrates these redundancies and the associated cross strapping between redundant components. Table 4.1-1 ATMS Redundancy Configuration lists the eight possible redundancy configurations.

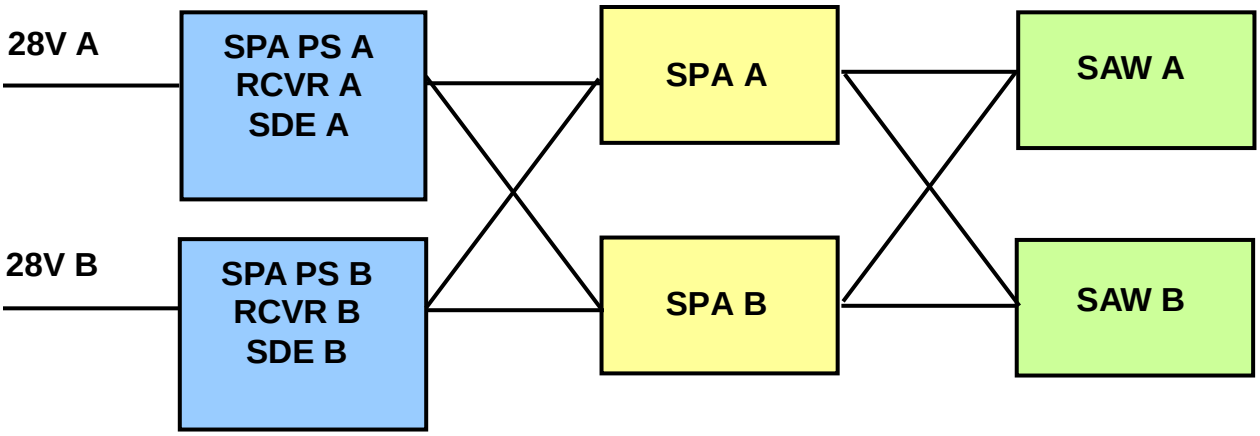

Figure 4.1-2. ATMS Redundancies

Table 4.1-1. ATMS Redundancy Configurations

CONFIG.	SPA PS	RECEIVER SELECT	SDE SELECT	SPA CROSS	SAW CROSS
1	A	REC A - PLO, CSO, GDO, RPS	SDE A	SPA A	SAW A
2					SAW B
3				SPA B	SAW B
4					SAW A
5	B	REC B - PLO, CSO, GDO, RPS	SDE B	SPA B	SAW B
6					SAW A
7				SPA A	SAW A
8					SAW B

Note: the antenna, Receiver, and SDM do not have redundancy so are not included in this table (See Figure 4.1-2).

The ATMS scanning geometry and corresponding angular velocity profile are illustrated in Figure 4.1-3. Every 8/3 second scan period is divided into 148 equal epochs of approximately 18 msec. During Operational mode, the radiometric signals are sampled for 96 Earth scene epochs, 4 cold calibration epochs and 4 hot calibration target epochs as shown in Figure 4.1-3. During Diagnostic mode, the scan profile can be commanded to change and the radiometric signals can be sampled at all 148 epochs.

Check the JPSS MIS Server at https://jpssmis.gsfc.nasa.gov/frontmenu_dsp.cfm to verify that this is the correct version prior to use.

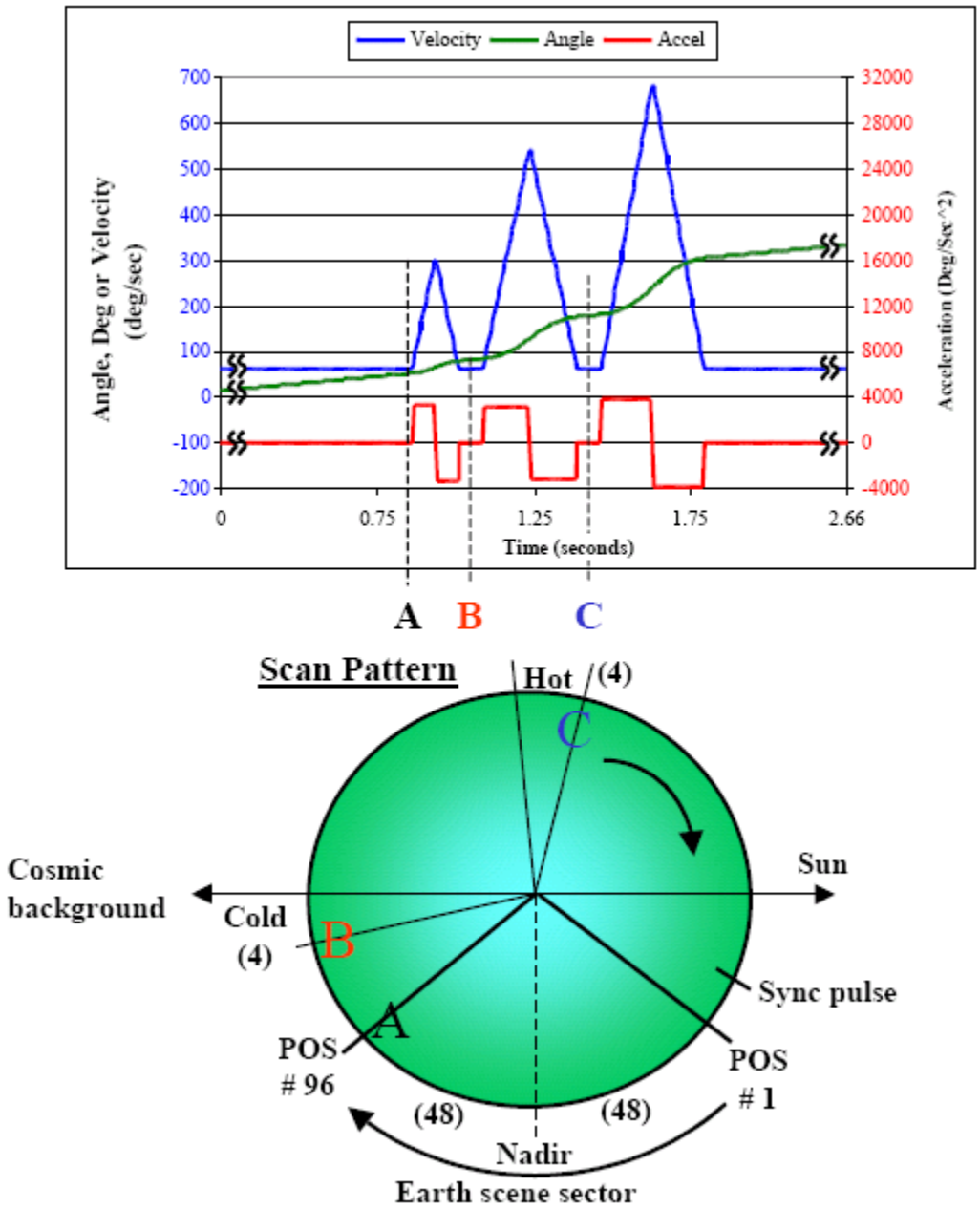

Figure 4.1-3. ATMS Operational Scan Pattern

4.1.3 Modes and Packet Structure

The ATMS instrument implements the following modes of operation:

- Off/Survival Mode
- Operational Mode
- Diagnostic Mode
- Safe Hold Mode

The functionality of the four instrument modes, and methods for executing transitions, are shown in Figure 4.1-4.

The ATMS outputs several packets relating to Mission Data: the Science packet, the Calibration packet, two types of Engineering packets, Memory Dump and Diagnostic packets. These packets unique to Mission data are not output in Off/Survival and Safe Hold Modes. The telemetry types, APID assignments and packet size for the ATMS mission data are listed in Table 4.1-2 with data rate by the ATMS mode.

Table 4.1-2. ATMS Mission Data Packet Types

VC ID	$APID_{10}$	Telemetry Packet Name	Data Rate (bps) by Mode		Downlink		Packet Size (octets)
			Operational	Diagnostic	HRD	SMD	
0	512	Command Status, Note 1	Note 1	Note 1	✓	✓	Note 1
0	513	LEO&A, Note 1	Note 1	Note 1	✓	✓	Note 1
1	515	Calibration	444	444	✓	✓	444
3	516	Diagnostic	--	622		✓	622
21	517	Dwell	--	936		✓	312
0	518	Housekeeping, Note 1	Note 1	Note 1	✓	✓	Note 1
1	528	Science	19,344	19,344	✓	✓	62
3	536	Science (Point and Stare or Continuous Sampling) (Note 2)	-	19,344 or 27,528		✓	62
1	530	Engineering – Hot Cal Temps	144	144	✓	✓	48
1	531	Engineering – Health and Status	162	162	✓	✓	162
21	524	Memory Dump	--	variable		✓	<= 1024
0	543	Hardware Error Status, Note 1	Note 1	Note 1	✓	✓	Note 1
3	514	Test, Note 1	--	24,576 Note 3		✓	256

1. Documented in the NPP Command & Telemetry Handbook
2. APIDs 528 and 536 are never output simultaneously. See the ATMS Science Data Section for further details.
3. The test packet data rate is determined by the spacecraft polling rate, not by the ATMS scan rate as data rates for

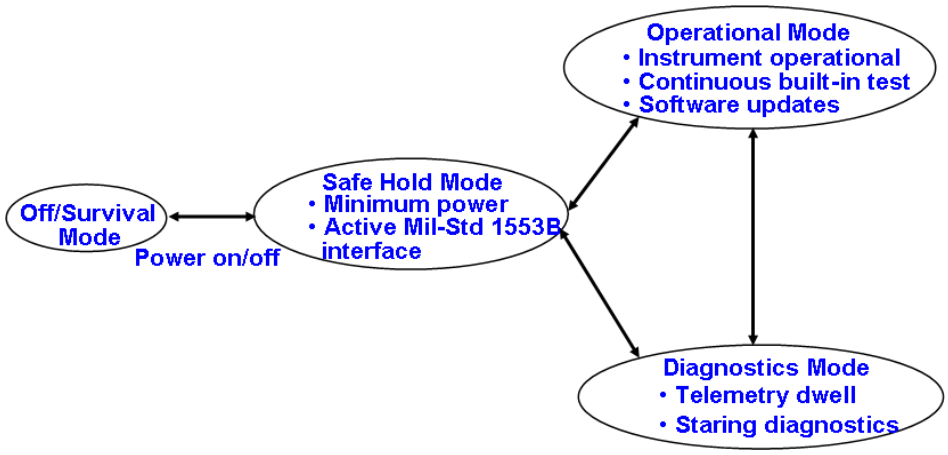

Figure 4.1-4. ATMS Modes and Mode Transitions

4.1.3.1 Off/Suvival Mode

In the Off or Survival mode, no primary power is supplied to the instrument. In Survival Mode, power is, however, available on the Survival Heater bus, enabling operation of survival heaters if needed. No mission data is output in Off or Survival Mode.

4.1.3.2 Operational Mode

In OPERATIONAL mode, the ATMS executes the earth-view scanning profile. Science data are output in APID 528. The ATMS generates calibration data during each scan period and also performs Continuous Built-In Tests (CBITs) that monitor and verify performance. The ATMS data consist of brightness temperatures and housekeeping data. The housekeeping and engineering data provides information for verifying instrument health and status and to support mission data processing. Software memory loads and dumps can be performed in Operational Mode.

4.1.3.3 Diagnostic Mode

Diagnostic "mode" is not established by a unique "mode" command. The ATMS enters Diagnostic mode when commanded to Continuous Sampling, Dwell or Point and Stare or when output of the Dwell or Diagnostic packets is enabled. If only Dwell or Diagnostic packets are enabled, the ATMS continues to output Science (in APID 528), Calibration and Engineering packets. If commanded to Continuous Sampling or Point and Stare, the Science data is output in APID 536 instead of APID 528; otherwise it continues to be output in APID 528. The ATMS Instrument Operation and Maintenance Manual describes the sensor's built-in diagnostic tests. Several tests can be initiated to determine the state of the instrument or sources of error in the following sub-modes.

4.1.3.3.1 Telemetry Dwell

The ATMS has the capability for high-rate sampling (55.5 Hz maximum) of selected housekeeping telemetry channels. When this function is commanded, the ATMS samples one of the housekeeping telemetry parameters, selected by command, at the same rate as a radiometric

Check the JPSS MIS Server at https://jpssmis.gsfc.nasa.gov/frontmenu_dsp.cfm to verify that this is the correct version prior to use.

signal channel. The telemetry dwell data packet carries this data. It may be used to isolate noise sources due to supply voltage EMI or intermittencies.

4.1.3.3.2 Point and Stare

In the Diagnostic Mode, the ATMS Instrument can point the antenna beams to any commanded beam position. The commanded position is maintained until a new pointing or scanning command is received.

4.1.3.4 Safe Hold

In the event of a serious spacecraft or instrument anomaly, the instrument may be commanded to enter the SAFE-HOLD mode to minimize power consumption. Transition to Safe Hold also occurs autonomously when programmable limits are exceeded on a safety-critical telemetry parameter or when the instrument does not receive 12 or more consecutive time-of-day messages.

No mission data are output in Safe Mode. The ATMS communicates with the spacecraft via the C&T bus to provide health and status data.

4.1.4 Mission Data

The ATMS telemetry transferred via the MIL-STD-1553B bus consists of data packets in the Consultative Committee for Space Data Systems (CCSDS) Path Protocol Data Unit format described in ref. 2.2m. Each packet has a primary header containing three 16-bit words (one 16-bit word = 2 octets) and a secondary header containing a 64-bit UTC time code. The only exceptions are not mission data. The LEO&A and Test packets do not contain the time code. All fields in the ATMS data packets are big endian.

The secondary header contains the Universal Time Code (UTC). The UTC contains 4 words (8 octets) and represents the time accurate to 1 µsec. The format of the UTC is provided in Table 4.1-3.

For science packets, the time tag indicates the time of the boundary pulse following the included data. For all other packets the UTC time represents the time of the oldest sample of the collection. Since data values are sampled in the order they appear in the packet, Housekeeping, Dwell and the Engineering packet's UTC time refers to the time of the first data value. The UTC times are calculated from the last second's UTC time plus the time difference in microseconds between the sample's 24 bit time value and the 24 bit timestamp register value for the one second time.

Table 4.1-3. NPP Universal Time Code Format

Time Code Format			
Bits	0 to 15	16 to 47	48 to 63
Parameter	Day	msec of Day	µsec of msec
Range of Values	0 to (2^{16}-1)	0 to 86,399,999	0 to 999

The ATMS uses three types of temperature monitoring:

Check the JPSS MIS Server at https://jpssmis.gsfc.nasa.gov/frontmenu_dsp.cfm to verify that this is the correct version prior to use.

- Temperature of the instrument mounting interface, monitored by the spacecraft, and reported in spacecraft telemetry.
- Passive Analog Temperature (PAT) sensors within the instrument, powered by the spacecraft. The signals are processed by the spacecraft and reported in spacecraft telemetry. The ATMS instrument uses five redundant PAT sensors.
- Platinum resistance temperature sensors (PRTs) within the instrument, processed by the instrument, and digitized for inclusion in the ATMS Housekeeping and Engineering data packets.

Unique coefficients for each PRT based on the manufacturer's data are required to determine the temperature. The signal from each PRT is digitized via an A-to-D converter aboard the ATMS instrument, providing a count from 0 to 65,535 representing the resistance of a given PRT. The count to resistance relationship is given by the following equation:

$$R = \frac{\gamma_R}{\gamma_1 - \gamma_0}[C - \gamma_0] - R_C \qquad (1)$$

Where: C = number of counts measured for the PRT
R_C = resistance of cable to the PRT (applicable only to 2 wire PRTs)
and γ_R, γ_0, and γ_1 are parameters defined in Table 4.1-4.

Table 4.1-4. ATMS PRT Parameters

Parameter	4-Wire PRTs	2-Wire PRTs
γ_R	PAM resistance (word 1 or 2 of Calibration Data Packet)	Housekeeping reference resistance = MUXREST1_A, MUXREST2_A, MUXREST1_B, MUXREST2_B (words 212 – 215 of Calibration Data Packet)
γ_0	4W_GND_A or _B (word 46 of Hkpg and Engr Data Packet)	2W_GND_A or _B (word 47 of Hkpg and Engr Data Packet)
γ_1	KV_WL_4WRES or WG_WL_4WRES (word 9 or 17 of Eng-HotCal Temperatures Data Packet)	[HK_2WREST1_A, HK_2WREST2_A] or, [HK_2WREST1_B, HK_2WREST2_B] (words 44 and 45 of HK and Engr Data Packets)

After computing the resistance, R, the Callendar Van Dusen equation is then used to determine the physical temperature of each PRT. The equation is given below:

$$R = R_O\left[1+\alpha\left(T-\delta\left(\frac{T}{100}-1\right)\left(\frac{T}{100}\right)-\beta\left(\frac{T}{100}-1\right)\left(\frac{T}{100}\right)^3\right)\right] \qquad (2)$$

Where:

T = physical temperature of the PRT
R = resistance (ohms) of the PRT (from equation 1)
R_o = resistance at ice point of the PRT (supplied by PRT vendor)
α, δ, β = constants measured for the PRT (supplied by PRT vendor)

The Newton-Raphson technique is used to perform the inversion, to compute T for a given R.

4.1.4.1 Wire PRTs

The 4-wire PRTs measure the temperature of the ATMS calibration loads. This information is needed in SDR processing, so temperature measurements are in the Engineering--Hot Cal Temps Packet. To support the processing of the 4-wire PRTs as described above, the following coefficients are provided in data words 3-62 of the Calibration Data Packet: R_0, α, δ, β.

4.1.4.2 Receiver Shelf 2-Wire PRT

All 2-wire PRTs assess the health and status of the instrument. They are not needed in producing SDRs, so measurements are included in the Engineering—Health and Status Packet.

Processing of the receiver shelf 2-wire PRTs is identical to the 4-wire PRT processing, except that β is assumed to be 0 and is not transmitted as part of the calibration data packet for those sensors. R_0, α, and δ are provided in words 140-155 of the Calibration Data Packet. The cable resistance, Rc, is also provided, for use in the counts-to-resistance conversion (equation 1).

4.1.4.3 Other 2-Wire PRTs

Other 2-wire PRTs are used purely as health and status indicators and do not require the same precision as the 4-wire and receiver shelf PRTs. These temperatures, therefore, are processed according to the following linear equation, except for the scan drive PRTs:

$$\begin{aligned} T &= A_1(R-R_0) = A_1(R'-R'_0) \\ R' &= R+R_C = \frac{\gamma_R}{\gamma_1-\gamma_0}[C-\gamma_0] \qquad (3) \\ R'_0 &= R_0+R_C \end{aligned}$$

where

T is the temperature, in degrees C,
R'_0 and A_1 are parameters transmitted in the Calibration Data Packet, words 156-211

The parameter A_1 is related to the Calendar-Van Dusen parameters by the following equation:

$$A_1 = \frac{1}{\alpha(1+\delta/1\quad 0)R0_0}$$

The scan drive PRTs (words #40 and 41 of the housekeeping packet) are processed using the equation defined in the conversion coefficient column of Table 4.1-8.

4.1.4.4 Science Data

The ATMS Science Data packets (APIDs 528 and 536) contain scan angle counts, error status flags (see Table 4.1-5 below), and radiometric counts for channels 1 through 22 at a single scan position. The operational mode science packet (APID 528) is output for 104 positions every scan (96 Earth scene positions, 4 cold calibration and 4 hot calibration positions). Since the scan duration is 8/3 seconds, the operational data rate is19,344 bps. In diagnostic mode, the science packet (APID 536) may be output 104 times every 8/3 seconds if the ATMS is in Point and Stare mode without Continuous Sampling enabled or may be generated approximately every 18 milliseconds if Continuous Sampling is enabled, thereby increasing the downlink rate to 27,528 bps.

The science packets contain a secondary header with a time tag indicating the time of the boundary pulse that follows the included data. For the scan angle value the full 16-bit range corresponds to 360 degrees, which means the scale factor is 5.493×10^{-3} degrees per count. The packet length is fixed at 62 octets. The structure of APID 528 is illustrated in Figure 4.1-5 and the user data fields are listed in Table 4.1-5.

Check the JPSS MIS Server at https://jpssmis.gsfc.nasa.gov/frontmenu_dsp.cfm to verify that this is the correct version prior to use.

ATMS Science Data Packet Format **VERSION** **C** **DATE:** **8/1/2004**

Fixed Packet Length 62 Octets

	PACKET PRIMARY HEADER							SECONDARY HEADER	User Data Field						
	Verson No.	Packet Identification			Packet Sequence Control (PSC)		Packet Length				ATMS Science Data				
		Type Indicator	Sec Hdr Flag	APID	Sequence Flags	Sequence Count		End of Scan	ATMS Scan Angle Counts	Error Status Flags (TBD)	Channel 1 Radiometric Counts	Channel 2 Radiometric Counts	Channel 3-21 Radiometric Counts ,,,,,,,,,,,,,,,,,,,,	Channel 22 Radiometric Counts	TOTAL
Bits	3	1	1	11	2	14	16	64	16	16	16	16	304	16	496
Octets	2				2		2	8	2	2	2	2	38	2	62
Value	000	0	1	210_{16} or 218_{16}	11	0…0	37_{16}	varies	varies	varies	varies	varies	varies	varies	

0 = Telemetry Packet

1 = Secondary Header Present

0x210 during Operational Mode
0x218 during Diagnostic Mode

Standalone Packet

CCSDS Day Segmented

Figure 4.1-5. ATMS Science Data Packet Format

Check the JPSS MIS Server at https://jpssmis.gsfc.nasa.gov/frontmenu_dsp.cfm to verify that this is the correct version prior to use.

Table 4.1-5. ATMS Science Packet User Data Fields

Start Bit	Bit Size	Mnemonic Name	Description	Units OR State Value	Conversion Coefficients (formula or C5,C4,C3,C2,C1,C0) OR State Name	Data Type
0	16	N/A	Scan Angle Counts	degrees	-, -, -, -, 5.493E-3, -0.4998812	U
16	16	N/A	Error Status Flags (ESF)	N/A	N/A	U
16	1	N/A	ESF -- Start of Scan Synchronization Bit	0 1	Any other scan position Start of Scan position	B
17	1	N/A	ESF -- Reserved	N/A	N/A	N/A
18	2	N/A	ESF -- Time Error	01 10 11	TOD Pulse TOD Message Boundary Pulse	B
20	1	N/A	ESF -- SDE Data Parity Error	0 1	No SDE Parity Error SDE Parity Error Present	B
21	1	N/A	ESF -- SDE Telemetry/Header Parity Error	0 1	No parity Error 9-bit header has parity error	B
22	1	N/A	ESF -- Reflector Position Available	0 1	Position Data Available SDE Position Data not Available	B
23	1	N/A	ESF -- SDE Command Transmit Time Out	0 1	No Timeout Error Occurred Command Transmit Timeout Error Occured	B
24	8	N/A	ESF -- Telemetry/Header Code from SDE	N/A	N/A	U
32	16	N/A	Ch 1_Radiometric Counts	N/A	N/A	U
48	16	N/A	Ch 2_Radiometric Counts	N/A	N/A	U
64	16	N/A	Ch 3_Radiometric Counts	N/A	N/A	U
80	16	N/A	Ch 4_Radiometric Counts	N/A	N/A	U
96	16	N/A	Ch 5_Radiometric Counts	N/A	N/A	U
112	16	N/A	Ch 6_Radiometric Counts	N/A	N/A	U
128	16	N/A	Ch 7_Radiometric Counts	N/A	N/A	U
144	16	N/A	Ch 8_Radiometric Counts	N/A	N/A	U
160	16	N/A	Ch 9_Radiometric Counts	N/A	N/A	U
176	16	N/A	Ch 10_Radiometric Counts	N/A	N/A	U
192	16	N/A	Ch 11_Radiometric Counts	N/A	N/A	U
208	16	N/A	Ch 12_Radiometric Counts	N/A	N/A	U
224	16	N/A	Ch 13_Radiometric Counts	N/A	N/A	U
240	16	N/A	Ch 14_Radiometric Counts	N/A	N/A	U
256	16	N/A	Ch 15_Radiometric Counts	N/A	N/A	U
272	16	N/A	Ch 16_Radiometric Counts	N/A	N/A	U
288	16	N/A	Ch 17_Radiometric Counts	N/A	N/A	U
304	16	N/A	Ch 18_Radiometric Counts	N/A	N/A	U
320	16	N/A	Ch 19_Radiometric Counts	N/A	N/A	U
336	16	N/A	Ch 20_Radiometric Counts	N/A	N/A	U
352	16	N/A	Ch 21_Radiometric Counts	N/A	N/A	U
368	16	N/A	Ch 22_Radiometric Counts	N/A	N/A	U

Check the JPSS MIS Server at https://jpssmis.gsfc.nasa.gov/frontmenu_dsp.cfm to verify that this is the correct version prior to use.

4.1.4.5 Calibration Data

The ATMS Calibration Packet (APID 515) contains constants unique to each ATMS unit necessary to process the mission and housekeeping data. The parameters calibrate the receiver outputs, temperature sensors and the optical alignment of the sensor. See Section 4.1.4 for more information on PRT temperature sensors.

The structure of APID 515 is illustrated in Figure 4.1-6 and the user data fields are listed in Table 4.1-6. It is output once every 8 seconds.

Check the JPSS MIS Server at https://jpssmis.gsfc.nasa.gov/frontmenu_dsp.cfm to verify that this is the correct version prior to use.

ATMS Calibration Packet VERSION C DATE: 8/1/2004

Fixed Packet Length 444 Octets

	PACKET PRIMARY HEADER							SECONDARY HEADER	User Data Field	
	Verson No.	Packet Identification			Packet Sequence Control (PSC)		Packet Length		ATMS Diagnostic Telemetry	
		Type Indicator	Sec Hdr Flag	APID	Sequence Flags	Sequence Count		Start of Scan	ATMS Diagnostic Telemetry	
Bits	3	1	1	11	2	14	16	64	3440	TOTAL 3552
Octets			2		2		2	8	430	444
Value	000	0	1	203_{16}	11	000_{16}	$1B5_{16}$	varies	varies	

Secondary Header Present

Standalone Packet

CCSDS Day Segmented

	ATMS Calibration		4-wire PRT						Cal Target Offsets					Cold Calibration Offsets					
	PAM Resistance - KAV	PAM Resistance - WG	4-W PRT_KAV_1_R0	4-W PRT_KAV_1_alpha	4-W PRT_KAV_1_delta	4-W PRT_KAV_1_beta	4-W PRT_KAV_2-8_*	4-W PRT_WG_1-7_*	Cal Target Offset_K	Cal Target Offset_A	Cal Target Offset_V	Cal Target Offset_W	Cal Target Offset_G	Cold Calibration Offset_K	Cold Calibration Offset_A	Cold Calibration Offset_V	Cold Calibration Offset_W	Cold Calibration Offset_G	
Word #	1	2	3	4	5	6	see Note 1 7 to 34	see Note 1 33 to 62	63	64	65	66	67	68	69	70	71	72	subtotal
Bits	16	16	16	16	16	16	448	448	16	16	16	16	16	16	16	16	16	16	1152
Octets	2	2	2	2	2	2	56	56	2	2	2	2	2	2	2	2	2	2	144
Value	varies	varies	varies	varies	varies	varies	varies	varies	varies	varies	varies	varies	varies	varies	varies	varies	varies	varies	

	Quadratic Coefficients			K-band Alignment									Ka-band	V-band	W-band	G-band Ali	K-band Shelf PRT				
	Quadratic Coefficient_Chan 1	Quadratic Coefficient_Chan 2-22	Quadratic Coefficient_Chan 22	Alignment_K_01_X	Alignment_K_01_Y	Alignment_K_01_Z	Alignment_K_48_X	Alignment_K_48_Y	Alignment_K_48_Z	Alignment_K_96_X	Alignment_K_96_Y	Alignment_K_96_Z	Alignment_A_**_?	Alignment_V_**_?	Alignment_W_**_?	Alignment_G_**_?	K_SHELF_PRT_R0	K_SHELF_PRT_alpha	K_SHELF_PRT_delta	K_SHELF_PRT_RC	
Word #	73	74 to 93	94	95	96	97	98	99	100	101	102	103	see Note 2 104 to 112	see Note 2 113 to 121	see Note 2 122 to 130	see Note 2 131 to 139	140	141	142	143	subtotal
Bits	16	320	16	16	16	16	16	16	16	16	16	16	144	144	144	144	16	16	16	16	1136
Octets	2	40	2	2	2	2	2	2	2	2	2	2	18	18	18	18	2	2	2	2	142
Value	varies	varies	varies	varies	varies	varies	varies	varies	varies	varies	varies	varies	varies	varies	varies	varies	varies	varies	varies	varies	

	Shelf PRTs			2-wire PRT R0 and A1																	
	V_SHELF_PRT_***	W_SHELF_PRT_***	G_SHELF_PRT_***	K_RFE_PRT_R0	K_RFE_PRT_A1	KA_RFE_PRT_****	V_RFE_PRT_****	V_PRI_PLO_PRT_****	V_RED_PLO_PRT_****	V_IF_PRT_***	W_RFE_PRT_****	SAW_FILT_PRT_****	W_IF_PRT_***	W_PRI_GDO_PRT_****	W_RED_GDO_PRT_****	G_PRI_CSO_PRT_****	G_RED_CSO_PRT_****	G1_IF_PRT_****	G2_IF_PRT_****		
Word #	see note 3 144	see note 3 148	see note 3 152	156	157	see note 4 158	see note 4 160	see note 4 162	see note 4 164	see note 4 166	see note 4 168	see note 4 170	see note 4 172	see note 4 174	see note 4 176	see note 4 178	see note 4 180	see note 4 182	see note 4 184	subtotal	
Bits	64	64	64	16	16	32	32	32	32	32	32	32	32	32	32	32	32	32	32	672	
Octets	8	8	8	2	2	4	4	4	4	4	4	4	4	4	4	4	4	4	4	84	
Value	varies	varies	varies	varies	varies	varies	varies	varies	varies	varies	varies	varies	varies	varies	varies	varies	varies	varies	varies		

	2-wire PRT R0 and A1																			
	RCVPS_A_PRT_****	RCVPS_B_PRT_****	OCXO_PRI_PRT_****	OCXO_RED_PRT_****	DSPA_1553_PRT_****	DSPB_1553_PRT_****	SPA_PS_A_PRT_****	SPA_PS_B_PRT_****	DSPA_PROC_PRT_****	DSPB_PROC_PRT_****	SD_MECH_TEMP_****	SD_PS_PRTA_****	SD_PS_PRTB_****	MUXREST1_A	MUXREST2_A	MUXREST1_B	MUXREST2_B			
Word #	see note 4 186	see note 4 188	see note 4 190	see note 4 192	see note 4 194	see note 4 196	see note 4 198	see note 4 200	see note 4 202	see note 4 204	see note 4 206	see note 4 208	see note 4 210	212	213	214	215	subtotal	total	
Bits	32	32	32	32	32	32	32	32	32	32	32	32	32	16	16	16	16	480	3440	
Octets	4	4	4	4	4	4	4	4	4	4	4	4	4	2	2	2	2	60	430	
Value	varies	varies	varies	varies	varies	varies	varies	varies	varies	varies	varies	varies	varies	varies	varies	varies	varies			

Figure 4.1-6. ATMS Calibration Packet Format

NOTES

1) For 4-wire PRTs, "*" represents the four PRT parameters -- "R0", "alpha", "delta" and "beta", for every numbered PRT (2 to 8 in K, Ka and V), (1 to 7 in W and G)
2) For alignment data, "**" represents the position, either 01, 48 or 96, and "?" represents the axis, X, Y or Z.
3) For Shelf PRTs, "***" represents three PRT parameters and the cable resistance -- "R0", "alpha", "delta" and "RC".
4) For 2-wire PRTs, "****" represents the two PRT parameters, "R0" and "A1".

Check the JPSS MIS Server at https://jpssmis.gsfc.nasa.gov/frontmenu_dsp.cfm to verify that this is the correct version prior to use.

Table 4.1-6. ATMS Calibration Packet User Data Fields

Start Bit	Bit Size	Memonic Name	Description	Units OR State Value	Conversion Coefficients (formula or C5,C4,C3,C2,C1,C0) OR State Name	Data Type
0	16	N/A	K, Ka and V band Passive Analog Monitor resistance	Ohms	-, -, -, -, 0.006, 2300	U
16	16	N/A	W and G band Passive Analog Monitor resistance	Ohms	-, -, -, -, 0.006, 2300	U
32	16	N/A	K, Ka and V-band Cal Target temperature #1, parameter R0 -- 4-W PRT_KAV_1_R0	Ohms	-, -, -, -, 0.003, 1900	U
48	16	N/A	K, Ka and V-band Cal Target temperature #1, parameter alpha -- 4-W PRT_KAV_1_alpha	$Celsius^{-1}$	-, -, -, -, 5.0E-8, 0.0020	U
64	16	N/A	K, Ka and V-band Cal Target temperature #1, parameter delta -- 4-W PRT_KAV_1_delta	Celsius	-, -, -, -, 5.0E-5, 0.0	U
80	16	N/A	K, Ka and V-band Cal Target temperature #1, parameter beta -- 4-W PRT_KAV_1_beta	Celsius	-, -, -, -, 6.0E-5, -2.0	U
96	16	N/A	K, Ka and V-band Cal Target temperature #2, parameter R0 -- 4-W PRT_KAV_2_R0	Ohms	-, -, -, -, 0.003, 1900	U
112	16	N/A	K, Ka and V-band Cal Target temperature #2, parameter alpha -- 4-W PRT_KAV_2_alpha	$Celsius^{-1}$	-, -, -, -, 5.0E-8, 0.0020	U
128	16	N/A	K, Ka and V-band Cal Target temperature #2, parameter delta -- 4-W PRT_KAV_2_delta	Celsius	-, -, -, -, 5.0E-5, 0.0	U
144	16	N/A	K, Ka and V-band Cal Target temperature #2, parameter beta -- 4-W PRT_KAV_2_beta	Celsius	-, -, -, -, 6.0E-5, -2.0	U
160	16	N/A	K, Ka and V-band Cal Target temperature #3, parameter R0 -- 4-W PRT_KAV_3_R0	Ohms	-, -, -, -, 0.003, 1900	U
176	16	N/A	K, Ka and V-band Cal Target temperature #3, parameter alpha -- 4-W PRT_KAV_3_alpha	$Celsius^{-1}$	-, -, -, -, 5.0E-8, 0.0020	U
192	16	N/A	K, Ka and V-band Cal Target temperature #3, parameter delta -- 4-W PRT_KAV_3_delta	Celsius	-, -, -, -, 5.0E-5, 0.0	U
208	16	N/A	K, Ka and V-band Cal Target temperature #3, parameter beta -- 4-W PRT_KAV_3_beta	Celsius	-, -, -, -, 6.0E-5, -2.0	U
224	16	N/A	K, Ka and V-band Cal Target temperature #4, parameter R0 -- 4-W PRT_KAV_4_R0	Ohms	-, -, -, -, 0.003, 1900	U
240	16	N/A	K, Ka and V-band Cal Target temperature #4, parameter alpha -- 4-W PRT_KAV_4_alpha	$Celsius^{-1}$	-, -, -, -, 5.0E-8, 0.0020	U
256	16	N/A	K, Ka and V-band Cal Target temperature #4, parameter delta -- 4-W PRT_KAV_4_delta	Celsius	-, -, -, -, 5.0E-5, 0.0	U
272	16	N/A	K, Ka and V-band Cal Target temperature #4, parameter beta -- 4-W PRT_KAV_4_beta	Celsius	-, -, -, -, 6.0E-5, -2.0	U
288	16	N/A	K, Ka and V-band Cal Target temperature #5, parameter R0 -- 4-W PRT_KAV_5_R0	Ohms	-, -, -, -, 0.003, 1900	U
304	16	N/A	K, Ka and V-band Cal Target temperature #5, parameter alpha -- 4-W PRT_KAV_5_alpha	$Celsius^{-1}$	-, -, -, -, 5.0E-8, 0.0020	U
320	16	N/A	K, Ka and V-band Cal Target temperature #5, parameter delta -- 4-W PRT_KAV_5_delta	Celsius	-, -, -, -, 5.0E-5, 0.0	U
336	16	N/A	K, Ka and V-band Cal Target temperature #5, parameter beta -- 4-W PRT_KAV_5_beta	Celsius	-, -, -, -, 6.0E-5, -2.0	U
352	16	N/A	K, Ka and V-band Cal Target temperature #6, parameter R0 -- 4-W PRT_KAV_6_R0	Ohms	-, -, -, -, 0.003, 1900	U
368	16	N/A	K, Ka and V-band Cal Target temperature #6, parameter alpha -- 4-W PRT_KAV_6_alpha	$Celsius^{-1}$	-, -, -, -, 5.0E-8, 0.0020	U
384	16	N/A	K, Ka and V-band Cal Target temperature #6, parameter delta -- 4-W PRT_KAV_6_delta	Celsius	-, -, -, -, 5.0E-5, 0.0	U
400	16	N/A	K, Ka and V-band Cal Target temperature #6, parameter beta -- 4-W PRT_KAV_6_beta	Celsius	-, -, -, -, 6.0E-5, -2.0	U
416	16	N/A	K, Ka and V-band Cal Target temperature #7, parameter R0 -- 4-W PRT_KAV_7_R0	Ohms	-, -, -, -, 0.003, 1900	U
432	16	N/A	K, Ka and V-band Cal Target temperature #7, parameter alpha -- 4-W PRT_KAV_7_alpha	$Celsius^{-1}$	-, -, -, -, 5.0E-8, 0.0020	U
448	16	N/A	K, Ka and V-band Cal Target temperature #7, parameter delta -- 4-W PRT_KAV_7_delta	Celsius	-, -, -, -, 5.0E-5, 0.0	U
464	16	N/A	K, Ka and V-band Cal Target temperature #7, parameter beta -- 4-W PRT_KAV_7_beta	Celsius	-, -, -, -, 6.0E-5, -2.0	U
480	16	N/A	K, Ka and V-band Cal Target temperature #8, parameter R0 -- 4-W PRT_KAV_8_R0	Ohms	-, -, -, -, 0.003, 1900	U
496	16	N/A	K, Ka and V-band Cal Target temperature #8, parameter alpha -- 4-W PRT_KAV_8_alpha	$Celsius^{-1}$	-, -, -, -, 5.0E-8, 0.0020	U
512	16	N/A	K, Ka and V-band Cal Target temperature #8, parameter delta -- 4-W PRT_KAV_8_delta	Celsius	-, -, -, -, 5.0E-5, 0.0	U
528	16	N/A	K, Ka and V-band Cal Target temperature #8, parameter beta -- 4-W PRT_KAV_8_beta	Celsius	-, -, -, -, 6.0E-5, -2.0	U
544	16	N/A	W and G-band Cal Target temperature #1, parameter R0 -- 4-W PRT_WG_1_R0	Ohms	-, -, -, -, 0.003, 1900	U
560	16	N/A	W and G-band Cal Target temperature #1, parameter alpha -- 4-W PRT_WG_1_alpha	$Celsius^{-1}$	-, -, -, -, 5.0E-8, 0.0020	U
576	16	N/A	W and G-band Cal Target temperature #1, parameter delta -- 4-W PRT_WG_1_delta	Celsius	-, -, -, -, 5.0E-5, 0.0	U
592	16	N/A	W and G-band Cal Target temperature #1, parameter beta -- 4-W PRT_WG_1_beta	Celsius	-, -, -, -, 6.0E-5, -2.0	U
608	16	N/A	W and G-band Cal Target temperature #2, parameter R0 -- 4-W PRT_WG_2_R0	Ohms	-, -, -, -, 0.003, 1900	U
624	16	N/A	W and G-band Cal Target temperature #2, parameter alpha -- 4-W PRT_WG_2_alpha	$Celsius^{-1}$	-, -, -, -, 5.0E-8, 0.0020	U
640	16	N/A	W and G-band Cal Target temperature #2, parameter delta -- 4-W PRT_WG_2_delta	Celsius	-, -, -, -, 5.0E-5, 0.0	U
656	16	N/A	W and G-band Cal Target temperature #2, parameter beta -- 4-W PRT_WG_2_beta	Celsius	-, -, -, -, 6.0E-5, -2.0	U
672	16	N/A	W and G-band Cal Target temperature #3, parameter R0 -- 4-W PRT_WG_3_R0	Ohms	-, -, -, -, 0.003, 1900	U
688	16	N/A	W and G-band Cal Target temperature #3, parameter alpha -- 4-W PRT_WG_3_alpha	$Celsius^{-1}$	-, -, -, -, 5.0E-8, 0.0020	U

Start Bit	Bit Size	Memonic Name	Description	Units OR State Value	Conversion Coefficients (formula or C5,C4,C3,C2,C1,C0) OR State Name	Data Type
704	16	N/A	W and G-band Cal Target temperature #3, parameter delta -- 4-W PRT_WG_3_ delta	Celsius	-, -, -, -, 5.0E-5, 0.0	U
720	16	N/A	W and G-band Cal Target temperature #3, parameter beta -- 4-W PRT_WG_3_ beta	Celsius	-, -, -, -, 6.0E-5, -2.0	U
736	16	N/A	W and G-band Cal Target temperature #4, parameter R0 -- 4-W PRT_WG_4_R0	Ohms	-, -, -, -, 0.003, 1900	U
752	16	N/A	W and G-band Cal Target temperature #4, parameter alpha -- 4-W PRT_WG_4_ alpha	$Celsius^{-1}$	-, -, -, -, 5.0E-8, 0.0020	U
768	16	N/A	W and G-band Cal Target temperature #4, parameter delta -- 4-W PRT_WG_4_ delta	Celsius	-, -, -, -, 5.0E-5, 0.0	U
784	16	N/A	W and G-band Cal Target temperature #4, parameter beta -- 4-W PRT_WG_4_ beta	Celsius	-, -, -, -, 6.0E-5, -2.0	U
800	16	N/A	W and G-band Cal Target temperature #5, parameter R0 -- 4-W PRT_WG_5_R0	Ohms	-, -, -, -, 0.003, 1900	U
816	16	N/A	W and G-band Cal Target temperature #5, parameter alpha -- 4-W PRT_WG_5_ alpha	$Celsius^{-1}$	-, -, -, -, 5.0E-8, 0.0020	U
832	16	N/A	W and G-band Cal Target temperature #5, parameter delta -- 4-W PRT_WG_5_ delta	Celsius	-, -, -, -, 5.0E-5, 0.0	U
848	16	N/A	W and G-band Cal Target temperature #5, parameter beta -- 4-W PRT_WG_5_ beta	Celsius	-, -, -, -, 6.0E-5, -2.0	U
864	16	N/A	W and G-band Cal Target temperature #6, parameter R0 -- 4-W PRT_WG_6_R0	Ohms	-, -, -, -, 0.003, 1900	U
880	16	N/A	W and G-band Cal Target temperature #6, parameter alpha -- 4-W PRT_WG_6_ alpha	$Celsius^{-1}$	-, -, -, -, 5.0E-8, 0.0020	U
896	16	N/A	W and G-band Cal Target temperature #6, parameter delta -- 4-W PRT_WG_6_ delta	Celsius	-, -, -, -, 5.0E-5, 0.0	U
912	16	N/A	W and G-band Cal Target temperature #6, parameter beta -- 4-W PRT_WG_6_ beta	Celsius	-, -, -, -, 6.0E-5, -2.0	U
928	16	N/A	W and G-band Cal Target temperature #7, parameter R0 -- 4-W PRT_WG_7_R0	Ohms	-, -, -, -, 0.003, 1900	U
944	16	N/A	W and G-band Cal Target temperature #7, parameter alpha -- 4-W PRT_WG_7_ alpha	$Celsius^{-1}$	-, -, -, -, 5.0E-8, 0.0020	U
960	16	N/A	W and G-band Cal Target temperature #7, parameter delta -- 4-W PRT_WG_7_ delta	Celsius	-, -, -, -, 5.0E-5, 0.0	U
976	16	N/A	W and G-band Cal Target temperature #7, parameter beta -- 4-W PRT_WG_7_ beta	Celsius	-, -, -, -, 6.0E-5, -2.0	U
992	16	N/A	K band Cal Target Offset	Celsius	-, -, -, -, -7.5E-6, 0.0	U
1008	16	N/A	KA band Cal Target Offset	Celsius	-, -, -, -, -7.5E-6, 0.0	U
1024	16	N/A	V band Cal Target Offset	Celsius	-, -, -, -, -7.5E-6, 0.0	U
1040	16	N/A	W band Cal Target Offset	Celsius	-, -, -, -, -7.5E-6, 0.0	U
1056	16	N/A	G band Cal Target Offset	Celsius	-, -, -, -, -7.5E-6, 0.0	U
1072	16	N/A	K band Cold Calibration Offset	Celsius	-, -, -, -, 1.5E-5, 0.0	U
1088	16	N/A	KA band Cold Calibration Offset	Celsius	-, -, -, -, 1.5E-5, 0.0	U
1104	16	N/A	V band Cold Calibration Offset	Celsius	-, -, -, -, 1.5E-5, 0.0	U
1120	16	N/A	W band Cold Calibration Offset	Celsius	-, -, -, -, 1.5E-5, 0.0	U
1136	16	N/A	G band Cold Calibration Offset	Celsius	-, -, -, -, 1.5E-5, 0.0	U
1152	16	N/A	Quadratic Coefficient at Chan 1	Kelvin	-, -, -, -, 2.6E-5, -0.850	U
1168	16	N/A	Quadratic Coefficient at Chan 2	Kelvin	-, -, -, -, 2.6E-5, -0.850	U
1184	16	N/A	Quadratic Coefficient at Chan 3	Kelvin	-, -, -, -, 2.6E-5, -0.850	U
1200	16	N/A	Quadratic Coefficient at Chan 4	Kelvin	-, -, -, -, 2.6E-5, -0.850	U
1216	16	N/A	Quadratic Coefficient at Chan 5	Kelvin	-, -, -, -, 2.6E-5, -0.850	U
1232	16	N/A	Quadratic Coefficient at Chan 6	Kelvin	-, -, -, -, 2.6E-5, -0.850	U
1248	16	N/A	Quadratic Coefficient at Chan 7	Kelvin	-, -, -, -, 2.6E-5, -0.850	U
1264	16	N/A	Quadratic Coefficient at Chan 8	Kelvin	-, -, -, -, 2.6E-5, -0.850	U
1280	16	N/A	Quadratic Coefficient at Chan 9	Kelvin	-, -, -, -, 2.6E-5, -0.850	U
1296	16	N/A	Quadratic Coefficient at Chan 10	Kelvin	-, -, -, -, 2.6E-5, -0.850	U
1312	16	N/A	Quadratic Coefficient at Chan 11	Kelvin	-, -, -, -, 2.6E-5, -0.850	U
1328	16	N/A	Quadratic Coefficient at Chan 12	Kelvin	-, -, -, -, 2.6E-5, -0.850	U
1344	16	N/A	Quadratic Coefficient at Chan 13	Kelvin	-, -, -, -, 2.6E-5, -0.850	U
1360	16	N/A	Quadratic Coefficient at Chan 14	Kelvin	-, -, -, -, 2.6E-5, -0.850	U
1376	16	N/A	Quadratic Coefficient at Chan 15	Kelvin	-, -, -, -, 2.6E-5, -0.850	U
1392	16	N/A	Quadratic Coefficient at Chan 16	Kelvin	-, -, -, -, 2.6E-5, -0.850	U

Start Bit	Bit Size	Memonic Name	Description	Units OR State Value	Conversion Coefficients (formula or C5,C4,C3,C2,C1,C0) OR State Name	Data Type
1408	16	N/A	Quadratic Coefficient at Chan 17	Kelvin	-, -, -, -, 2.6E-5, -0.850	U
1424	16	N/A	Quadratic Coefficient at Chan 18	Kelvin	-, -, -, -, 2.6E-5, -0.850	U
1440	16	N/A	Quadratic Coefficient at Chan 19	Kelvin	-, -, -, -, 2.6E-5, -0.850	U
1456	16	N/A	Quadratic Coefficient at Chan 20	Kelvin	-, -, -, -, 2.6E-5, -0.850	U
1472	16	N/A	Quadratic Coefficient at Chan 21	Kelvin	-, -, -, -, 2.6E-5, -0.850	U
1488	16	N/A	Quadratic Coefficient at Chan 22	Kelvin	-, -, -, -, 2.6E-5, -0.850	U
1504	16	N/A	K band alignment 01 at X axis -- Alignment_K_01_X	Degrees	-, -, -, -, 2.0E-5, -0.655	U
1520	16	N/A	K band Alignment 01 at Y axis -- Alignment_K_01_Y	Degrees	-, -, -, -, 2.0E-5, -0.655	U
1536	16	N/A	K band Alignment 01 at Z axis -- Alignment_K_01_Z	Degrees	-, -, -, -, 2.0E-5, -0.655	U
1552	16	N/A	K band Alignment 48 at X axis -- Alignment_K_48_X	Degrees	-, -, -, -, 2.0E-5, -0.655	U
1568	16	N/A	K band Alignment 48 at Y axis -- Alignment_K_48_Y	Degrees	-, -, -, -, 2.0E-5, -0.655	U
1584	16	N/A	K band Alignment 48 at Z axis -- Alignment_K_48_Z	Degrees	-, -, -, -, 2.0E-5, -0.655	U
1600	16	N/A	K band Alignment 96 at X axis -- Alignment_K_96_X	Degrees	-, -, -, -, 2.0E-5, -0.655	U
1616	16	N/A	K band Alignment 96 at Y axis -- Alignment_K_96_Y	Degrees	-, -, -, -, 2.0E-5, -0.655	U
1632	16	N/A	K band Alignment 96 at Z axis -- Alignment_K_96_Z	Degrees	-, -, -, -, 2.0E-5, -0.655	U
1648	16	N/A	Ka band alignment 01 at X axis -- Alignment_A_01_X	Degrees	-, -, -, -, 2.0E-5, -0.655	U
1664	16	N/A	Ka band Alignment 01 at Y axis -- Alignment_A_01_Y	Degrees	-, -, -, -, 2.0E-5, -0.655	U
1680	16	N/A	Ka band Alignment 01 at Z axis -- Alignment_A_01_Z	Degrees	-, -, -, -, 2.0E-5, -0.655	U
1696	16	N/A	Ka band Alignment 48 at X axis -- Alignment_A_48_X	Degrees	-, -, -, -, 2.0E-5, -0.655	U
1712	16	N/A	Ka band Alignment 48 at Y axis -- Alignment_A_48_Y	Degrees	-, -, -, -, 2.0E-5, -0.655	U
1728	16	N/A	Ka band Alignment 48 at Z axis -- Alignment_A_48_Z	Degrees	-, -, -, -, 2.0E-5, -0.655	U
1744	16	N/A	Ka band Alignment 96 at X axis -- Alignment_A_96_X	Degrees	-, -, -, -, 2.0E-5, -0.655	U
1760	16	N/A	Ka band Alignment 96 at Y axis -- Alignment_A_96_Y	Degrees	-, -, -, -, 2.0E-5, -0.655	U
1776	16	N/A	Ka band Alignment 96 at Z axis -- Alignment_A_96_Z	Degrees	-, -, -, -, 2.0E-5, -0.655	U
1792	16	N/A	V band alignment 01 at X axis -- Alignment_V_01_X	Degrees	-, -, -, -, 2.0E-5, -0.655	U
1808	16	N/A	V band Alignment 01 at Y axis -- Alignment_V_01_Y	Degrees	-, -, -, -, 2.0E-5, -0.655	U
1824	16	N/A	V band Alignment 01 at Z axis -- Alignment_V_01_Z	Degrees	-, -, -, -, 2.0E-5, -0.655	U
1840	16	N/A	V band Alignment 48 at X axis -- Alignment_V_48_X	Degrees	-, -, -, -, 2.0E-5, -0.655	U
1856	16	N/A	V band Alignment 48 at Y axis -- Alignment_V_48_Y	Degrees	-, -, -, -, 2.0E-5, -0.655	U
1872	16	N/A	V band Alignment 48 at Z axis -- Alignment_V_48_Z	Degrees	-, -, -, -, 2.0E-5, -0.655	U
1888	16	N/A	V band Alignment 96 at X axis -- Alignment_V_96_X	Degrees	-, -, -, -, 2.0E-5, -0.655	U
1904	16	N/A	V band Alignment 96 at Y axis -- Alignment_V_96_Y	Degrees	-, -, -, -, 2.0E-5, -0.655	U
1920	16	N/A	V band Alignment 96 at Z axis -- Alignment_V_96_Z	Degrees	-, -, -, -, 2.0E-5, -0.655	U
1936	16	N/A	W band alignment 01 at X axis -- Alignment_W_01_X	Degrees	-, -, -, -, 2.0E-5, -0.655	U
1952	16	N/A	W band Alignment 01 at Y axis -- Alignment_W_01_Y	Degrees	-, -, -, -, 2.0E-5, -0.655	U
1968	16	N/A	W band Alignment 01 at Z axis -- Alignment_W_01_Z	Degrees	-, -, -, -, 2.0E-5, -0.655	U
1984	16	N/A	W band Alignment 48 at X axis -- Alignment_W_48_X	Degrees	-, -, -, -, 2.0E-5, -0.655	U
2000	16	N/A	W band Alignment 48 at Y axis -- Alignment_W_48_Y	Degrees	-, -, -, -, 2.0E-5, -0.655	U
2016	16	N/A	W band Alignment 48 at Z axis -- Alignment_W_48_Z	Degrees	-, -, -, -, 2.0E-5, -0.655	U
2032	16	N/A	W band Alignment 96 at X axis -- Alignment_W_96_X	Degrees	-, -, -, -, 2.0E-5, -0.655	U
2048	16	N/A	W band Alignment 96 at Y axis -- Alignment_W_96_Y	Degrees	-, -, -, -, 2.0E-5, -0.655	U
2064	16	N/A	W band Alignment 96 at Z axis -- Alignment_W_96_Z	Degrees	-, -, -, -, 2.0E-5, -0.655	U
2080	16	N/A	G band alignment 01 at X axis -- Alignment_G_01_X	Degrees	-, -, -, -, 2.0E-5, -0.655	U
2096	16	N/A	G band Alignment 01 at Y axis -- Alignment_G_01_Y	Degrees	-, -, -, -, 2.0E-5, -0.655	U

Start Bit	Bit Size	Memonic Name	Description	Units OR State Value	Conversion Coefficients (formula or C5,C4,C3,C2,C1,C0) OR State Name	Data Type
2112	16	N/A	G band Alignment 01 at Z axis -- Alignment_G_01_Z	Degrees	-, -, -, -, 2.0E-5, -0.655	U
2128	16	N/A	G band Alignment 48 at X axis -- Alignment_G_48_X	Degrees	-, -, -, -, 2.0E-5, -0.655	U
2144	16	N/A	G band Alignment 48 at Y axis -- Alignment_G_48_Y	Degrees	-, -, -, -, 2.0E-5, -0.655	U
2160	16	N/A	G band Alignment 48 at Z axis -- Alignment_G_48_Z	Degrees	-, -, -, -, 2.0E-5, -0.655	U
2176	16	N/A	G band Alignment 96 at X axis -- Alignment_G_96_X	Degrees	-, -, -, -, 2.0E-5, -0.655	U
2192	16	N/A	G band Alignment 96 at Y axis -- Alignment_G_96_Y	Degrees	-, -, -, -, 2.0E-5, -0.655	U
2208	16	N/A	G band Alignment 96 at Z axis -- Alignment_G_96_Z	Degrees	-, -, -, -, 2.0E-5, -0.655	U
2224	16	N/A	K band shelf temperature, R0 parameter -- K_SHELF_PRT_R0	Ohms	-, -, -, -, 0.003, 1900	U
2240	16	N/A	K band shelf temperature, alpha parameter -- K_SHELF_PRT_alpha	Celsius^{-1}	-, -, -, -, 5.0E-8, 0.0020	U
2256	16	N/A	K band shelf temperature, delta parameter -- K_SHELF_PRT_delta	Celsius	-, -, -, -, 5.0E-5, 0.0	U
2272	16	N/A	K band shelf temperature, Rc parameter -- K_SHELF_PRT_RC	Ohms	-, -, -, -, 0.0003, 0.0	U
2288	16	N/A	V band shelf temperature, R0 parameter -- V_SHELF_PRT_ R0	Ohms	-, -, -, -, 0.003, 1900	U
2304	16	N/A	V band shelf temperature, alpha parameter -- V_SHELF_PRT_ alpha	Celsius^{-1}	-, -, -, -, 5.0E-8, 0.0020	U
2320	16	N/A	V band shelf temperature, delta parameter -- V_SHELF_PRT_ delta	Celsius	-, -, -, -, 5.0E-5, 0.0	U
2336	16	N/A	V band shelf temperature, Rc parameter -- V_SHELF_PRT_RC	Ohms	-, -, -, -, 0.0003, 0.0	U
2352	16	N/A	W band shelf temperature, R0 parameter -- W_SHELF_PRT_ R0	Ohms	-, -, -, -, 0.003, 1900	U
2368	16	N/A	W band shelf temperature, alpha parameter -- W_SHELF_PRT_ alpha	Celsius^{-1}	-, -, -, -, 5.0E-8, 0.0020	U
2384	16	N/A	W band shelf temperature, delta parameter -- W_SHELF_PRT_ delta	Celsius	-, -, -, -, 5.0E-5, 0.0	U
2400	16	N/A	W band shelf temperature, Rc parameter -- W_SHELF_PRT_RC	Ohms	-, -, -, -, 0.0003, 0.0	U
2416	16	N/A	G band shelf temperature, R0 parameter -- G_SHELF_PRT_ R0	Ohms	-, -, -, -, 0.003, 1900	U
2432	16	N/A	G band shelf temperature, alpha parameter -- G_SHELF_PRT_ alpha	Celsius^{-1}	-, -, -, -, 5.0E-8, 0.0020	U
2448	16	N/A	G band shelf temperature, delta parameter -- G_SHELF_PRT_ delta	Celsius	-, -, -, -, 5.0E-5, 0.0	U
2464	16	N/A	G band shelf temperature, Rc parameter -- G_SHELF_PRT_RC	Ohms	-, -, -, -, 0.0003, 0.0	U
2480	16	N/A	K band RFE temperature, R0 parameter -- K_RFE_PRT _R0	Ohms	-, -, -, -, 0.003, 1900	U
2496	16	N/A	K band RFE temperature, A1 parameter -- K_RFE_PRT _A1	Celsius/Ohm	-, -, -, -, 3.0E-6, 0.0	U
2512	16	N/A	KA band RFE temperature, R0 parameter -- KA_RFE_PRT_R0	Ohms	-, -, -, -, 0.003, 1900	U
2528	16	N/A	KA band RFE temperature, A1 parameter -- KA_RFE_PRT_A1	Celsius/Ohm	-, -, -, -, 3.0E-6, 0.0	U
2544	16	N/A	V band RFE temperature, R0 parameter -- V_RFE_PRT_R0	Ohms	-, -, -, -, 0.003, 1900	U
2560	16	N/A	V band RFE temperature, A1 parameter -- V_RFE_PRT_A1	Celsius/Ohm	-, -, -, -, 3.0E-6, 0.0	U
2576	16	N/A	V band primary PL oscillator temperature, R0 parameter -- V_PRI_PLO_PRT_R0	Ohms	-, -, -, -, 0.003, 1900	U
2592	16	N/A	V band primary PL oscillator temperature, A1 parameter -- V_PRI_PLO_PRT_A1	Celsius/Ohm	-, -, -, -, 3.0E-6, 0.0	U
2608	16	N/A	V band reduntancy PL oscillator temperature, R0 parameter -- V_RED_PLO_PRT_R0	Ohms	-, -, -, -, 0.003, 1900	U
2624	16	N/A	V band reduntancy PL oscillator temperature, A1 parameter -- V_RED_PLO_PRT_A1	Celsius/Ohm	-, -, -, -, 3.0E-6, 0.0	U
2640	16	N/A	V band IF temperature, R0 parameter -- V_IF_PRT_R0	Ohms	-, -, -, -, 0.003, 1900	U
2656	16	N/A	V band IF temperature, A1 parameter -- V_IF_PRT_A1	Celsius/Ohm	-, -, -, -, 3.0E-6, 0.0	U
2672	16	N/A	W band RFE temperature, R0 parameter -- W_RFE_PRT_R0	Ohms	-, -, -, -, 0.003, 1900	U
2688	16	N/A	W band RFE temperature, A1 parameter -- W_RFE_PRT_A1	Celsius/Ohm	-, -, -, -, 3.0E-6, 0.0	U
2704	16	N/A	SAW filter temperature, R0 parameter -- SAW_FILT_PRT_R0	Ohms	-, -, -, -, 0.003, 1900	U
2720	16	N/A	SAW filter temperature, A1 parameter -- SAW_FILT_PRT_A1	Celsius/Ohm	-, -, -, -, 3.0E-6, 0.0	U
2736	16	N/A	W band IF temperature, R0 parameter -- W_IF_PRT_R0	Ohms	-, -, -, -, 0.003, 1900	U
2752	16	N/A	W band IF temperature, A1 parameter -- W_IF_PRT_A1	Celsius/Ohm	-, -, -, -, 3.0E-6, 0.0	U
2768	16	N/A	W band primary GD oscillator temperature, R0 parameter -- W_PRI_GDO_PRT_R0	Ohms	-, -, -, -, 0.003, 1900	U
2784	16	N/A	W band primary GD oscillator temperature, A1 parameter -- W_PRI_GDO_PRT_A1	Celsius/Ohm	-, -, -, -, 3.0E-6, 0.0	U
2800	16	N/A	W band reduntancy GD oscillator temperature, R0 parameter -- W_RED_GDO_PRT_R0	Ohms	-, -, -, -, 0.003, 1900	U

Start Bit	Bit Size	Memonic Name	Description	Units OR State Value	Conversion Coefficients (formula or C5,C4,C3,C2,C1,C0) OR State Name	Data Type
2816	16	N/A	W band reduntancy GD oscillator temperature, A1 parameter -- W_RED_GDO_PRT_A1	Celsius/Ohm	-, -, -, -, 3.0E-6, 0.0	U
2832	16	N/A	G band primary CS oscillator temperature, R0 parameter -- G_PRI_CSO_PRT_R0	Ohms	-, -, -, -, 0.003, 1900	U
2848	16	N/A	G band primary CS oscillator temperature, A1 parameter -- G_PRI_CSO_PRT_A1	Celsius/Ohm	-, -, -, -, 3.0E-6, 0.0	U
2864	16	N/A	G band primary GD oscillator temperature, R0 parameter -- G_RED_CSO_PRT_R0	Ohms	-, -, -, -, 0.003, 1900	U
2880	16	N/A	G band primary GD oscillator temperature, A1 parameter -- G_RED_CSO_PRT_A1	Celsius/Ohm	-, -, -, -, 3.0E-6, 0.0	U
2896	16	N/A	G band Path 1 IF temperature, R0 parameter -- G1_IF_PRT_R0	Ohms	-, -, -, -, 0.003, 1900	U
2912	16	N/A	G band Path 1 IF temperature, A1 parameter -- G1_IF_PRT_A1	Celsius/Ohm	-, -, -, -, 3.0E-6, 0.0	U
2928	16	N/A	G band Path 2 IF temperature, R0 parameter -- G2_IF_PRT_R0	Ohms	-, -, -, -, 0.003, 1900	U
2944	16	N/A	G band Path 2 IF temperature, A1 parameter -- G2_IF_PRT_A1	Celsius/Ohm	-, -, -, -, 3.0E-6, 0.0	U
2960	16	N/A	Receiver power supply path A temperature, R0 parameter -- RCVPS_A_PRT_R0	Ohms	-, -, -, -, 0.003, 1900	U
2976	16	N/A	Receiver power supply path A temperature, A1 parameter -- RCVPS_A_PRT_A1	Celsius/Ohm	-, -, -, -, 3.0E-6, 0.0	U
2992	16	N/A	Receiver power supply path B temperature, R0 parameter -- RCVPS_B_PRT_R0	Ohms	-, -, -, -, 0.003, 1900	U
3008	16	N/A	Receiver power supply path B temperature, A1 parameter -- RCVPS_B_PRT_A1	Celsius/Ohm	-, -, -, -, 3.0E-6, 0.0	U
3024	16	N/A	Oscillator primary temperature, R0 parameter -- OCXO_PRI_PRT_R0	Ohms	-, -, -, -, 0.003, 1900	U
3040	16	N/A	Oscillator primary temperature, A1 parameter -- OCXO_PRI_PRT_A1	Celsius/Ohm	-, -, -, -, 3.0E-6, 0.0	U
3056	16	N/A	Oscillator reduntant temperature, R0 parameter -- OCXO_RED_PRT_R0	Ohms	-, -, -, -, 0.003, 1900	U
3072	16	N/A	Oscillator reduntant temperature, A1 parameter -- OCXO_RED_PRT_A1	Celsius/Ohm	-, -, -, -, 3.0E-6, 0.0	U
3088	16	N/A	1553 Digital Signal Processor Side A, temperature reading, R0 parameter -- DSPA_1553_PRT_R0	Ohms	-, -, -, -, 0.003, 1900	U
3104	16	N/A	1553 Digital Signal Processor Side A, temperature reading, A1 parameter -- DSPA_1553_PRT_A1	Celsius/Ohm	-, -, -, -, 3.0E-6, 0.0	U
3120	16	N/A	1553 Digital Signal Processor Side B, temperature reading, R0 parameter -- DSPB_1553_PRT_R0	Ohms	-, -, -, -, 0.003, 1900	U
3136	16	N/A	1553 Digital Signal Processor Side B, temperature reading, A1 parameter -- DSPB_1553_PRT_A1	Celsius/Ohm	-, -, -, -, 3.0E-6, 0.0	U
3152	16	N/A	Signal processing assembly power supply path A temperature, R0 parameter -- SPA_PS_A_PRT_R0	Ohms	-, -, -, -, 0.003, 1900	U
3168	16	N/A	Signal processing assembly power supply path A temperature, A1 parameter -- SPA_PS_A_PRT_A1	Celsius/Ohm	-, -, -, -, 3.0E-6, 0.0	U
3184	16	N/A	Signal processing assembly power supply path B temperature, R0 parameter -- SPA_PS_B_PRT_R0	Ohms	-, -, -, -, 0.003, 1900	U
3200	16	N/A	Signal processing assembly power supply path B temperature, A1 parameter -- SPA_PS_B_PRT_A1	Celsius/Ohm	-, -, -, -, 3.0E-6, 0.0	U
3216	16	N/A	Digital Signal Processor, Side A temperature, R0 parameter -- DSPA_PROC_PRT_R0	Ohms	-, -, -, -, 0.003, 1900	U
3232	16	N/A	Digital Signal Processor, Side A temperature, A1 parameter -- DSPA_PROC_PRT_A1	Celsius/Ohm	-, -, -, -, 3.0E-6, 0.0	U
3248	16	N/A	Digital Signal Processor, Side B temperature, R0 parameter -- DSPB_PROC_PRT_R0	Ohms	-, -, -, -, 0.003, 1900	U
3264	16	N/A	Digital Signal Processor, Side B temperature, A1 parameter -- DSPB_PROC_PRT_A1	Celsius/Ohm	-, -, -, -, 3.0E-6, 0.0	U
3280	16	N/A	Scan drive mechanism temperature, R0 parameter -- SD_MECH_TEMP_R0	Ohms	-, -, -, -, 0.003, 1900	U
3296	16	N/A	Scan drive mechanism temperature, A1 parameter -- SD_MECH_TEMP_A1	Celsius/Ohm	-, -, -, -, 3.0E-6, 0.0	U
3312	16	N/A	Scan drive mechanism power supply Side A temperature, R0 parameter -- SD_PS_PRTA_R0	Ohms	-, -, -, -, 0.003, 1900	U
3328	16	N/A	Scan drive mechanism power supply Side A temperature, A1 parameter -- SD_PS_PRTA_A1	Celsius/Ohm	-, -, -, -, 3.0E-6, 0.0	U
3344	16	N/A	Scan drive mechanism power supply Side B temperature, R0 parameter -- SD_PS_PRTB_R0	Ohms	-, -, -, -, 0.003, 1900	U
3360	16	N/A	Scan drive mechanism power supply Side B temperature, A1 parameter -- SD_PS_PRTB_A1	Celsius/Ohm	-, -, -, -, 3.0E-6, 0.0	U
3376	16	N/A	Housekeeping Reference Resistance #1, Side A -- MUXREST1_A	Ohms	-, -, -, -, 0.003, 1900	U
3392	16	N/A	Housekeeping Reference Resistance #2, Side A -- MUXREST2_A	Ohms	-, -, -, -, 0.003, 1900	U
3408	16	N/A	Housekeeping Reference Resistance #1, Side B -- MUXREST1_B	Ohms	-, -, -, -, 0.003, 1900	U
3424	16	N/A	Housekeeping Reference Resistance #2, Side B -- MUXREST2_B	Ohms	-, -, -, -, 0.003, 1900	U

The SD_MECH_TEMP, SD_PS_PRTA and SD_PS_PRTB (R0 and A1) parameters are not used for processing. Instead the ATSDMECHT and ATSDPST parameters in the Health and Status Engineering packet (Table 4.1-8) are used to derive the Scan Drive temperatures.

4.1.4.6 Engineering Data-Hot Cal Temperatures

The ATMS Hot Calibration Target Temperature Engineering Packet (APID 530) contains data used for SDR processing and is output every 8/3 seconds. It contains platinum resistance temperature (PRT) sensor data for the two hot calibration targets. The structure of APID 530 is illustrated in Figure 4.1-7 and the user data fields are listed in Table 4.1-7.

ATMS Engineering -- Hot Cal Temperatures Packet **VERSION C DATE: 8/1/2004**

Fixed Packet Length 48 Octets

	PACKET PRIMARY HEADER							SECOND-ARY HEADER	User Data Field	
	Verson No.	Packet Identification			Packet Sequence Control (PSC)		Packet Length		ATMS Engineering Telemetry	
		Type Indicator	Sec Hdr Flag	APID	Sequence Flags	Sequence Count		Start of Data	ATMS Hot Cal Temperatures	
										TOTAL
Bits	3	1	1	11	2	14	16	64	272	384
Octets	2				2		2	8	34	48
Value	000	0	1	212_{16}	11	000_{16}	029_{16}	varies	varies	

Secondary Header Present

Standalone Packet

CCSDS Day Segmented

	ATMS Engineering -- Hot Cal Temperatures																	
	KV_WL_4WP RT_1	KV_WL_4WP RT_2	KV_WL_4WP RT_3	KV_WL_4WP RT_4	KV_WL_4WP RT_5	KV_WL_4WP RT_6	KV_WL_4WP RT_7	KV_WL_4WP RT_8	KV_WL_4WR ES	WG_WL_4WP RT_1	WG_WL_4WP RT_2	WG_WL_4WP RT_3	WG_WL_4WP RT_4	WG_WL_4WP RT_5	WG_WL_4WP RT_6	WG_WL_4WP RT_7	WG_WL_4WR ES	
Word #	1	2	3	4	5	6	7	8	9	10	11	12	13	14	15	16	17	subtotal
Bits	16	16	16	16	16	16	16	16	16	16	16	16	16	16	16	16	16	272
Octets	2	2	2	2	2	2	2	2	2	2	2	2	2	2	2	2	2	34
Value	varies	varies	varies	varies	varies	varies	varies	varies	varies	varies	varies	varies	varies	varies	varies	varies	varies	

Figure 4.1-7. ATMS Engineering Hot Cal Temperature Packet Format

Check the JPSS MIS Server at https://jpssmis.gsfc.nasa.gov/frontmenu_dsp.cfm to verify that this is the correct version prior to use.

Table 4.1-7. ATMS Hot Cal Temperature Engineering Packet User Data Fields

Start Bit	Bit Size	Memonic Name	Description	Units OR State Value	Conversion Coefficients (formula or C5,C4,C3,C2,C1,C0) OR State Name	Data Type
0	16	N/A	K, Ka, V-band warm load 4 wire temp sensor 1 reading -- KV_WL_4WPRT_1	Celsius	Eqn (1) and (2) of Section 4.1.4	U
16	16	N/A	K, Ka, V-band warm load 4 wire temp sensor 2 reading -- KV_WL_4WPRT_2	Celsius	Eqn (1) and (2) of Section 4.1.4	U
32	16	N/A	K, Ka, V-band warm load 4 wire temp sensor 3 reading -- KV_WL_4WPRT_3	Celsius	Eqn (1) and (2) of Section 4.1.4	U
48	16	N/A	K, Ka, V-band warm load 4 wire temp sensor 4 reading -- KV_WL_4WPRT_4	Celsius	Eqn (1) and (2) of Section 4.1.4	U
64	16	N/A	K, Ka, V-band warm load 4 wire temp sensor 5 reading -- KV_WL_4WPRT_5	Celsius	Eqn (1) and (2) of Section 4.1.4	U
80	16	N/A	K, Ka, V-band warm load 4 wire temp sensor 6 reading -- KV_WL_4WPRT_6	Celsius	Eqn (1) and (2) of Section 4.1.4	U
96	16	N/A	K, Ka, V-band warm load 4 wire temp sensor 7 reading -- KV_WL_4WPRT_7	Celsius	Eqn (1) and (2) of Section 4.1.4	U
112	16	N/A	K, Ka, V-band warm load 4 wire temp sensor 8 reading -- KV_WL_4WPRT_8	Celsius	Eqn (1) and (2) of Section 4.1.4	U
128	16	N/A	K, Ka, V-band warm load 4 wire temp sensor reference resistance (gamma 1) -- KV_WL_4WRES	Counts	N/A	U
144	16	N/A	W, G-band warm load 4 wire temp sensor 1 reading -- WG_WL_4WPRT_1	Celsius	Eqn (1) and (2) of Section 4.1.4	U
160	16	N/A	W, G-band warm load 4 wire temp sensor 2 reading -- WG_WL_4WPRT_2	Celsius	Eqn (1) and (2) of Section 4.1.4	U
176	16	N/A	W, G-band warm load 4 wire temp sensor 3 reading -- WG_WL_4WPRT_3	Celsius	Eqn (1) and (2) of Section 4.1.4	U
192	16	N/A	W, G-band warm load 4 wire temp sensor 4 reading -- WG_WL_4WPRT_4	Celsius	Eqn (1) and (2) of Section 4.1.4	U
208	16	N/A	W, G-band warm load 4 wire temp sensor 5 reading -- WG_WL_4WPRT_5	Celsius	Eqn (1) and (2) of Section 4.1.4	U
224	16	N/A	W, G-band warm load 4 wire temp sensor 6 reading -- WG_WL_4WPRT_6	Celsius	Eqn (1) and (2) of Section 4.1.4	U
240	16	N/A	W, G-band warm load 4 wire temp sensor 7 reading -- WG_WL_4WPRT_7	Celsius	Eqn (1) and (2) of Section 4.1.4	U
256	16	N/A	W, G-band warm load 4 wire temp sensor reference resistance (gamma 1) -- WG_WL_4WRES	Counts	N/A	U

4.1.4.7 Engineering Data-Health and Status

The ATMS Health and Status Engineering Packet (APID 531) is output every 8 seconds, or every 3 scans. The contents are identical to the ATMS LEO&A and Housekeeping Packets: 2-wire temperature sensors, voltage monitors, scan drive telemetry and three status words -- SD_MODE_ERRORS, INSTRUMENT_MODE, and ERROR_STATUS (words 72, 73, and 74). Table 4.1.8 lists all the user data fields, each 16 bits (or 1 word) in length. The mnemonic column of Table 4.1.8 includes the Word Number associated with the telemetry item. The Word Number is used to identify the Safety-Critical-Limits-Telemetry item associated with the ERROR_STATUS word and the Telemetry Item Word Number in the Dwell Packet (see Section 4.1.5). The UTC time in the secondary header represents the time the first sample is taken. The structure of APID 531 is illustrated in Figure 4.1-8.

ATMS Engineering -- Health and Status Packet VERSION C DATE: 8/1/2004

Fixed Packet Length 162 Octets

	PACKET PRIMARY HEADER							SECONDARY HEADER	User Data Field	
	Verson No.	Packet Identification			Packet Sequence Control (PSC)		Packet Length		ATMS Engineering Telemetry	
		Type Indicator	Sec Hdr Flag	APID	Sequence Flags	Sequence Count		Start of Data	ATMS Health and Status Telemetry	
Bits	3	1	1	11	2	14	16	64	1184	TOTAL 1296
Octets	2				2		2	8	148	162
Value	000	0	1	213_{16}	11	000_{16}	$09B_{16}$	varies	varies	

Secondary Header Present

Standalone Packet

CCSDS Day Segmented

ATMS Engineering Telemetry -- Health and Status																										
	Software Version/Serial Number	SPA_P5V_?_VMON	SPA_P15V_?_VMON	SPA_N15V_?_VMON	RCV_P6V_RF_VMON	RCV_P12V_RF2_VMON	RCV_P15V_RF_VMON	RCV_N15V_RF_VMON	RCV_P15V_ANA_VMON	RCV_N15V_ANA_VMON	K_RFE_PRT	KA_RFE_PRT	V_RFE_PRT	V_PRI_PLO_PRT	V_RED_PLO_PRT	V_IF_PRT	W_RFE_PRT	SAW_FILT_PRT	W_IF_PRT	W_PRI_GDO_PRT	W_RED_GDO_PRT	G_PRI_CSO_PRT	G_RED_CSO_PRT	G1_IF_PRT	G2_IF_PRT	
		see Note 1	see Note 1	see Note 1																						
Word #	1	2	3	4	5	6	7	8	9	10	11	12	13	14	15	16	17	18	19	20	21	22	23	24	25	subtotal
Bits	16	16	16	16	16	16	16	16	16	16	16	16	16	16	16	16	16	16	16	16	16	16	16	16	16	400
Octets	2	2	2	2	2	2	2	2	2	2	2	2	2	2	2	2	2	2	2	2	2	2	2	2	2	50
Value	varies	varies	varies	varies	varies	varies	varies	varies	varies	varies	varies	varies	varies	varies	varies	varies	varies	varies	varies	varies	varies	varies	varies	varies	varies	

ATMS Engineering Telemetry -- Health and Status (Continued)																										
	W_SHELF_PRT	KA_SHELF_PRT	G_SHELF_PRT	V_SHELF_PRT	RCVPS_A_PRT	RCVPS_B_PRT	OCXO_PRI_PRT	OCXO_RED_PRT	DSPA_1553_PRT	DSPB_1553_PRT	SPA_PS_A_PRT	SPA_PS_B_PRT	DSPA_PROC_PRT	DSPB_PROC_PRT	SD_MECH_TEMP	SD_PS_PRT	V_PLO_A_LOCK_VMON	V_PLO_B_LOCK_VMON	HK_2WREST1_?	HK_2WREST2_?	4W_GND_?	2W_GND_?	VD_REF_?/Module 1	VD_REF_?/Module 2	VD_REF_?/Module 3	
																			see Note 1	see Note 1	see Note 1	see Note 1	see Note 1	see Note 1	see Note 1	
Word #	26	27	28	29	30	31	32	33	34	35	36	37	38	39	40	41	42	43	44	45	46	47	48	49	50	subtotal
Bits	16	16	16	16	16	16	16	16	16	16	16	16	16	16	16	16	16	16	16	16	16	16	16	16	16	400
Octets	2	2	2	2	2	2	2	2	2	2	2	2	2	2	2	2	2	2	2	2	2	2	2	2	2	50
Value	varies	varies	varies	varies	varies	varies	varies	varies	varies	varies	varies	varies	varies	varies	varies	varies	varies	varies	varies	varies	varies	varies	varies	varies	varies	

ATMS Engineering Telemetry -- Health and Status (Continued)																											
	VD_REF_?/Module 4	VD_GND_?/Module 1	VD_GND_?/Module 2	VD_GND_?/Module 3	VD_GND_?/Module 4	SD_P5V_VMON	SD_P12V_VMON	SD_N12V_VMON	MAIN_MOTOR_CUR	COMP_MOTOR_CUR	RESOLVER_VMON	SD_MAIN_MOTOR_VEL	SD_COMP_MOTOR_VEL	SD_MAIN_LOOP_ERROR	SD_MAIN_LOOP_INT_ERROR	SD_MAIN_LOOP_VEL_ERROR	SD_COMP_LOOP_ERROR	SD_MAIN_MOTOR_REQ_VOLTAGE	SD_COMP_MOTOR_REQ_VOLTAGE	SD_FEED_FORWARD_VOLTAGE	COMP_MOTOR_POS	SD_MODE_ERRORS	INSTRUMENT_MODE	ERROR_STATUS		
																											user data
	see Note 1	see Note 1	see Note 1	see Note 1	see Note 1																	see Note 2	see Note 2	see Note 2		field total
Word #	51	52	53	54	55	56	57	58	59	60	61	62	63	64	65	66	67	68	69	70	71	72	73	74	subtotal	
Bits	16	16	16	16	16	16	16	16	16	16	16	16	16	16	16	16	16	16	16	16	16	16	16	16	384	1184
Octets	2	2	2	2	2	2	2	2	2	2	2	2	2	2	2	2	2	2	2	2	2	2	2	2	48	148
Value	varies	varies	varies	varies	varies	varies	varies	varies	varies	varies	varies	varies	varies	varies	varies	varies	varies	varies	varies	varies	varies	varies	varies	varies		

Figure 4.1-8. ATMS Engineering Health and Status Packet Format

NOTES:
1. "?" represents "A" or "B" depending on which side is active.
2. See Table 4.1.8 for bit assignments of these fields.

Check the JPSS MIS Server at https://jpssmis.gsfc.nasa.gov/frontmenu_dsp.cfm to verify that this is the correct version prior to use.

Table 4.1-8. ATMS Health and Status Engineering Packet User Data Fields

Start Bit	Bit Size	Memonic Name (Dwell Item Number)	Description	Units OR State Value	Conversion Coefficients (formula or C5,C4,C3,C2,C1,C0) OR State Name	Data Type
0	16	ATSWVER2	Software Version/Serial Number -- (1)	N/A	N/A	U
16	16	ATSPAP5V	Signal Processing Assembly Secondary Voltage Monitor -- SPA_P5V_A_VMON or SPA_P5V_B_VMON (2)	Volts	8.5832E-05, 0.00	U
32	16	ATSPAP15V	Signal Processing Assembly Secondary Voltage Monitor -- SPA_P15V_A_VMON or SPA_P15V_B_VMON (3)	Volts	2.7466E-04, 0.00	U
48	16	ATSPAM15V	Signal Processing Assembly Secondary Voltage Monitor -- SPA_N15V_A_VMON or SPA_N15V_B_VMON (4)	Volts	-2.7466E-04, 0.00	U
64	16	ATRCVP6RF1V	Receiver Secondary Voltage Monitor -- RCV_P6V_RF_VMON (5)	Volts	1.0717E-04, 0.00	U
80	16	ATRCVP12RF2V	Receiver Secondary Voltage Monitor -- RCV_P12V_RF2_VMON (6)	Volts	2.12505E-04, 0.00	U
96	16	ATRCVP15RF1V	Receiver Secondary Voltage Monitor -- RCV_P15V_RF_VMON (7)	Volts	2.5628E-04, 0.70	U
112	16	ATRCVM15RF1V	Receiver Secondary Voltage Monitor -- RCV_N15V_RF_VMON (8)	Volts	-2.5628E-04, -0.70	U
128	16	ATRCVP15ANAV	Receiver Secondary Voltage Monitor -- RCV_P15V_ANA_VMON (9)	Volts	2.6560E-04, 0.00	U
144	16	ATRCVM15ANAV	Receiver Secondary Voltage Monitor -- RCV_N15V_ANA_VMON (10)	Volts	-2.6560E-04, 0.00	U
160	16	ATKRFET	K-band Receiver Front End Temperature monitor (2-wire PRT) -- K_RFE_PRT (11)	Celsius	Eqn (3) of Section 4.1.4	U
176	16	ATKARFET	Ka-Band Receiver Front End Temperature monitor (2-wire PRT) -- KA_RFE_PRT (12)	Celsius	Eqn (3) of Section 4.1.4	U
192	16	ATVRFET	V-Band Receiver Front End Temperature monitor (2-wire PRT) -- V_RFE_PRT (13)	Celsius	Eqn (3) of Section 4.1.4	U
208	16	ATVPLO1T	V-Band Primary PLL Oscillator Temperature monitor (2-wire PRT) -- V_PRI_PLO_PRT (14)	Celsius	Eqn (3) of Section 4.1.4	U
224	16	ATVPLO2T	V-Band Redundant PLL Oscillator Temperature monitor (2-wire PRT) -- V_RED_PLO_PRT (15)	Celsius	Eqn (3) of Section 4.1.4	U
240	16	ATVIFT	V-band IF Module Temperature monitor (2-wire PRT) -- V_IF_PRT (16)	Celsius	Eqn (3) of Section 4.1.4	U
256	16	ATWRFPT	W-band Receiver Front End Temperature monitor (2-wire PRT) -- W_RFE_PRT (17)	Celsius	Eqn (3) of Section 4.1.4	U
272	16	ATSAWT	SAW filter Temperature monitor (2-wire PRT) -- SAW_FILT_PRT (18)	Celsius	Eqn (3) of Section 4.1.4	U
288	16	ATWIFT	W-band IF Module Temperature monitor (2-wire PRT) -- W_IF_PRT (19)	Celsius	Eqn (3) of Section 4.1.4	U
304	16	ATWGDO1T	W-band Primary Gunn Diode Oscillator Temperature monitor (2-wire PRT) -- W_PRI_GDO_PRT (20)	Celsius	Eqn (3) of Section 4.1.4	U
320	16	ATWGDO2T	Temperature monitor (2-wire PRT) -- W_RED_GDO_PRT (21)	Celsius	Eqn (3) of Section 4.1.4	U
336	16	ATGCSO1T	G-band Primary Cavity-Stabilized Oscillator Temperature monitor (2-wire PRT) -- G_PRI_CSO_PRT (22)	Celsius	Eqn (3) of Section 4.1.4	U
352	16	ATGCSO2T	G-band Redundant Cavity-Stabilized Oscillator Temperature monitor (2-wire PRT) -- G_RED_CSO_PRT (23)	Celsius	Eqn (3) of Section 4.1.4	U
368	16	ATG1IFT	G-band IF Module #1 Temperature monitor (2-wire PRT) -- G1_IF_PRT (24)	Celsius	Eqn (3) of Section 4.1.4	U
384	16	ATG2IFT	G-band IF Module #2 Temperature monitor (2-wire PRT) -- G2_IF_PRT (25)	Celsius	Eqn (3) of Section 4.1.4	U
400	16	ATWSHELFT	W-band Shelf Temperature monitor (2-wire PRT) -- W_SHELF_PRT (26)	Celsius	Eqn (1) of Section 4.1.4	U
416	16	ATKSHELFT	K, Ka-band Shelf Temperature monitor (2-wire PRT) -- KKA_SHELF_PRT (27)	Celsius	Eqn (1) of Section 4.1.4	U
432	16	ATGSHELFT	G-band Shelf Temperature monitor (2-wire PRT) -- G_SHELF_PRT (28)	Celsius	Eqn (1) of Section 4.1.4	U
448	16	ATVSHELFT	V-band Shelf Temperature monitor (2-wire PRT) -- V_SHELF_PRT (29)	Celsius	Eqn (1) of Section 4.1.4	U
464	16	ATRCVAT	Receiver Power Supply, Side A Temperature monitor (2-wire PRT) -- RCVPS_A_PRT (30)	Celsius	Eqn (3) of Section 4.1.4	U
480	16	ATRCVBT	Receiver Power Supply, Side B Temperature monitor (2-wire PRT) -- RCVPS_B_PRT (31)	Celsius	Eqn (3) of Section 4.1.4	U
496	16	ATOCXO1T	Primary Oven-controlled Crystal Oscillator Temperature monitor (2-wire PRT) -- OCXO_PRI_PRT (32)	Celsius	Eqn (3) of Section 4.1.4	U
512	16	ATOCXO2T	Redundant Oven-controlled Crystal Oscillator Temperature monitor (2-wire PRT) -- OCXO_RED_PRT (33)	Celsius	Eqn (3) of Section 4.1.4	U
528	16	ATDSPAT	1553 Digital Signal Processor, Side A Temperature monitor (2-wire PRT) -- DSPA_1553_PRT (34)	Celsius	Eqn (3) of Section 4.1.4	U
544	16	ATDSPBT	1553 Digital Signal Processor, Side A Temperature monitor (2-wire PRT) -- DSPB_1553_PRT (35)	Celsius	Eqn (3) of Section 4.1.4	U

Check the JPSS MIS Server at https://jpssmis.gsfc.nasa.gov/frontmenu_dsp.cfm to verify that this is the correct version prior to use.

Start Bit	Bit Size	Memonic Name	Description	Units OR State Value	Conversion Coefficients (formula or C5,C4,C3,C2,C1,C0) OR State Name	Data Type
560	16	ATSPAAT	Signal Processing Assembly Power Supply, Side A Temperature monitor (2-wire PRT) -- SPA_PS_A_PRT (36)	Celsius	Eqn (3) of Section 4.1.4	U
576	16	ATSPABT	Signal Processing Assembly Power Supply, Side A Temperature monitor (2-wire PRT) -- SPA_PS_B_PRT (37)	Celsius	Eqn (3) of Section 4.1.4	U
592	16	ATDSPAPT	Digital Signal Processor, Side A Processor Temperature monitor (2-wire PRT) -- DSPA_PROC_PRT (38)	Celsius	Eqn (3) of Section 4.1.4	U
608	16	ATDSPBPT	Digital Signal Processor, Side A Processor Temperature monitor (2-wire PRT) -- DSPB_PROC_PRT (39)	Celsius	Eqn (3) of Section 4.1.4	U
624	16	ATSDMECHT	Scan Drive Mechanism Temperature monitor (2-wire PRT) -- SD_MECH_TEMP (40)	Celsius	[1000,000x(Count-399.3371)]/[8905947-(1907.3xCount)]	U
640	16	ATSDPST	Scan Drive Power Supply Temperature monitor (2-wire PRT) -- SD_PS_PRT (41)	Celsius	[1000,000x(Count-399.3371)]/[8905947-(1907.3xCount)]	U
656	16	ATVPLOAV	V-band Phase-Lock Loop Oscillator Voltage Monitor, Side A -- V_PLO_A_LOCK_VMON (42)	Volts	2.0399E-04, 0.00	U
672	16	ATVPLOBV	V-band Phase-Lock Loop Oscillator Voltage Monitor, Side B -- V_PLO_B_LOCK_VMON (43)	Volts	2.0399E-04, 0.00	U
688	16	ATHK2WREF1	2-wire PRT Housekeeping 1 Resistance (gamma 1) -- HK_2WREST1_A or HK_2WREST1_B (44)	Counts	Eqn (1) of Section 4.1.4	U
704	16	ATHK2WREF2	2-wire PRT Housekeeping 2 Resistance (gamma 1) -- HK_2WREST2_A or HK_2WREST2_B (45)	Counts	Eqn (1) of Section 4.1.4	U
720	16	AT4WGNDT	4-Wire PRT Ground Resistance (gamma 0) -- 4W_GND_A or 4W_GND_B (46)	Counts	Eqn (1) of Section 4.1.4	U
736	16	AT2WGNDT	2-Wire PRT Ground Resistance (gamma 0) -- 2W_GND_A or 2W_GND_B (47)	Counts	Eqn (1) of Section 4.1.4	U
752	16	ATVDREF1	Video Digitizer, Module 1, Reference Voltage -- VD_REF_A or VD_REF_B; Module 1 (48)	Volts	6.8666E-05, 0.00	U
768	16	ATVDREF2	Video Digitizer, Module 1, Reference Voltage -- VD_REF_A or VD_REF_B; Module 2 (49)	Volts	6.8666E-05, 0.00	U
784	16	ATVDREF3	Video Digitizer, Module 1, Reference Voltage -- VD_REF_A or VD_REF_B; Module 3 (50)	Volts	6.8666E-05, 0.00	U
800	16	ATVDREF4	Video Digitizer, Module 1, Reference Voltage -- VD_REF_A or VD_REF_B; Module 4 (51)	Volts	6.8666E-05, 0.00	U
816	16	ATVDGND1	Video Digitizer, Module 1, Ground Voltage -- VD_GND_A or VD_GND_B; Module 1 (52)	Volts	6.8666E-05, 0.00	U
832	16	ATVDGND2	Video Digitizer, Module 1, Ground Voltage -- VD_GND_A or VD_GND_B; Module 2 (53)	Volts	6.8666E-05, 0.00	U
848	16	ATVDGND3	Video Digitizer, Module 1, Ground Voltage -- VD_GND_A or VD_GND_B; Module 3 (54)	Volts	6.8666E-05, 0.00	U
864	16	ATVDGND4	Video Digitizer, Module 1, Ground Voltage -- VD_GND_A or VD_GND_B; Module 4 (55)	Volts	6.8666E-05, 0.00	U
880	16	ATSDP5V	Scan Drive, +5 V Power Supply Monitor -- SD_P5V_VMON, Count1 (56)	Volts	5008/Count1	U
896	16	ATSDP12V	Scan Drive, +12 V Power Supply Monitor -- SD_P12V_VMON, Count3 (57)	Volts	[(4.284xCount3)-(45.08657*Count2)/Count1]+43.30089	U
912	16	ATSDM12V	Scan Drive, -12 V Power Supply Monitor -- SD_N12V_VMON, Count2 (58)	Volts	[63.096xCount2/Count1]-60.6212	U
928	16	ATSDMMI	Scan Drive Main Motor Current -- MAIN_MOTOR_CUR (59)	Amps	-, -, -, -, 0.021777, -0.3888	S
944	16	ATSDCMI	Scan Drive Compensation Motor Current -- COMP_MOTOR_CUR (60)	Amps	-, -, -, -, 0.021777, -0.3888	S
960	16	ATRESV	Scan Drive Resolver Voltage -- RESOLVER_VMON (61)	Volts	-, -, -, -, 0.008817, 0.0	S
976	16	ATSDMMVEL	Scan Drive Main Motor Velocity -- SD_MAIN_MOTOR_VEL (62)	Deg/sec	-, -, -, -, 0.0625, 0.0	S
992	16	ATSDCMVEL	Scan Drive Compensation Motor Velocity -- SD_COMP_MOTOR_VEL (63)	Deg/sec	-, -, -, -, 0.0625, 0.0	S
1008	16	ATSDMLPERR	Scan Drive Main Motor Loop Error -- SD_MAIN_LOOP_ERROR (64)	Deg	-, -, -, -, 0.005493, 0.0	S
1024	16	ATSDMINTERR	Scan Drive Main Motor Loop Integral Error -- SD_MAIN_LOOP_INT_ERROR (65)	Deg	-, -, -, -, 0.005493, 0.0	S
1040	16	ATSDMVELERR	Scan Drive Main Motor Velocity Error -- SD_MAIN_LOOP_VEL_ERROR (66)	Deg/sec	-, -, -, -, 0.0625, 0.0	S
1056	16	ATSDCVELERR	Scan Drive Compensation Motor Loop Velocity Error -- SD_COMP_LOOP_VEL_ERROR (67)	Deg/sec	-, -, -, -, 0.0625, 0.0	S
1072	16	ATSDMMRV	Scan Drive, Main Motor Req Voltage -- SD_MAIN_MOTOR_REQ_VOLTAGE (68)	Volts	-, -, -, -, 0.0005493164, 0.0	S
1088	16	ATSCDMRV	Scan Drive Compensation Motor Req Voltage -- SD_COMP_MOTOR_REQ_VOLTAGE (69)	Volts	-, -, -, -, 0.0005493164, 0.0	S
1104	16	ATSDFFVR	Scan Drive Feed Forward Voltage -- SD_FEED_FORWARD_VOLTAGE (70)	Volts	458752/Count	S
1120	16	ATCMPOS	Scan Drive Compensation Motor Position -- COMP_MOTOR_POS (71)	Deg	-, -, -, -, 0.005493164, 0.0	S
1136	16	ATSDMODE	Scan drive mode error (SDME) -- SD_MODE_ERRORS (72)	N/A	N/A	U
1136	1	ATPWCYC	SDME -- Power Cycle Flag	0 1	"Reset" command received "Power on Reset" occurred	B
1137	1	ATSTNDBY	SDME -- Standby Mode	0 1	Other Mode Standby Mode	B

Check the JPSS MIS Server at https://jpssmis.gsfc.nasa.gov/frontmenu_dsp.cfm to verify that this is the correct version prior to use.

Start Bit	Bit Size	Memonic Name	Description	Units OR State Value	Conversion Coefficients (formula or C5,C4,C3,C2,C1,C0) OR State Name	Data Type
1138	1	ATSCANP	SDME -- Scan from PROM	0 1	SDE Scan not from PROM SDE is using Scan from PROM	B
1139	1	ATSCANR	SDME -- Scan from RAM	0 1	SDE Scan not from RAM SDE is using Scan from RAM	B
1140	1	N/A	SDME -- 0	0	N/A	0
1141	1	N/A	SDME -- 0	0	N/A	0
1142	1	ATSTATE	SDME -- Stare Mode	0 1	Scan Drive not in Stare mode Scan Drive is in Stare mode	B
1143	1	N/A	SDME -- 0	0	N/A	0
1144	1	ATCMDPAR	SDME -- Command Parity Error	0 1	Command Received with proper parity Command Received with illegal parity	B
1145	1	ATCMDLEN	SDME -- Command Length Error	0 1	Proper length command received Command received with illegal length	B
1146	1	ATCMDILL	SDME -- Illegal Command	0 1	SDE received valid command SDE received illegal command	B
1147	1	ATMMINHIB	SDME -- Main Motor Inhibited	0 1	Power to Main Motor On No Power to Main Motor	B
1148	1	ATSIDE	SDME -- Side A Selected	0 1	SDE Redundancy set to Side B SDE Redundancy set to Side A	B
1149	1	ATCOMPMOTOR	SDME -- Compensation Motor Off	0 1	Compensatiion Motor On Compensation Motor Off	B
1150	1	N/A	SDME -- 0	0	N/A	0
1151	1	AT64RTD	SDME -- 64X RTD Error Flag	0 1	No SDE Error SDE Error Present	B
1152	16	ATIMODE	Instrument Mode Word (IMW) -- INSTRUMENT_MODE (73)	N/A	N/A	N/A
1152	1	N/A	IMW -- Blank	0	N/A	0
1153	1	ATSAFEHOLD	IMW -- Safe Hold Mode	0 1	Instrument not in Safe Hold Instrument is in Safe Hold Mode	B
1154	1	ATCSAMP	IMW -- Continuous Sampling	0 1	Other mode selected Continuous Sampling Selected	B
1155	1	ATDEWLLEN	IMW -- Dwell Data Enabled	0 1	Dwell packets disabled Dwell packets enabled	B
1156	1	ATDIAGEN	IMW -- Diagnostic Data Enabled	0 1	Diagnostic Data Disabled Diagnostic Data Enabled	B
1157	1	ATSYNC	IMW -- Synchronization Mode (8-sec pulse or 1-sec message)	0 1	Using 8-second pulse Using 1 second message	B
1158	3	ATSCANID	IMW -- Scan Pattern ID	000 001 010 011 100 101 111	PROM Default Profile RAM Profile 1 RAM Profile 2 RAM Profile 3 RAM Profile 4 Stare Off	B

Check the JPSS MIS Server at https://jpssmis.gsfc.nasa.gov/frontmenu_dsp.cfm to verify that this is the correct version prior to use.

Start Bit	Bit Size	Memonic Name	Description	Units OR State Value	Conversion Coefficients (formula or C5,C4,C3,C2,C1,C0) OR State Name	Data Type
1161	1	ATPLOLOCK	IMW -- PLO Lock Indicator	0 1	PLO not locked PLO Lock signal detected	B
1162	1	ATRXST	IMW -- Receiver Enable	0 1	Receiver Subsystem Disabled Receiver Subsystem Enabled	B
1163	1	ATSDCEN	IMW -- SD Compensator Enable	0 1	SD Compensator Motor Disabled SD Compensator Motor Enabled	B
1164	1	ATSDST	IMW -- Scan Drive Enable	0 1	SDE disabled SDE enabled	B
1165	1	ATSPA	IMW -- SPA A/B	0 1	SPA A selected SPA B selected	B
1166	1	ATSAWF	IMW -- Saw Filter A/B	0 1	SAW Filter A selected SAW Filter B selected	B
1167	1	ATBLOCK	IMW -- Redundancy A/B	0 1	Redundancy A Block selected Redundancy B Block selected	B
1168	16	ATERROR1	Error Status Word (ESW) -- ERROR_STATUS (74)	N/A	N/A	N/A
1168	1	ATHADCLU	ESW -- Housekeeping ADC Latch-up	0 1	No Housekeeping Latch-up Latch-up condition on Housekeeping CCA	B
1169	1	ATVADCLU	ESW -- Video ADC Latch-up	0 1	No Video Digitizer Latch-up Latch-up condition on Video Digitizer CCA	B
1170	2	ATTIME	ESW -- Time Error	00 01 10 11	No Error TOD Pulse TOD Message Boundary Pulse	B
1172	1	ATDPAR	ESW -- SDE Data Parity Error	0 1	No parity Error 17-bit telemetry has parity error	B
1173	1	ATSDETHPAR	ESW -- SDE Telemetry Header Parity Error	0 1	No parity Error 9-bit header has parity error	B
1174	1	ATSDEDNA	ESW -- SDE Position Data not Available	0 1	Position Data Available SDE Position Data not Available	B
1175	1	ATSDECTO	ESW -- SDE Command Transmit Timeout	0 1	No Timeout Error Occurred Command Transmit Timeout Error Occured	B
1176	1	ATSPECORR	ESW -- Scan Phase Error Correction Transmitted	0 1	No Scan Phase Correction was necessary Scan Phase Error Correction was transmitted	B
1177	7	ATSCLTLM	ESW -- Safety Critical Limits Telemetry	N/A	N/A	N/A

4.1.4.8 Diagnostic Data

Output of the ATMS diagnostic packet is not planned or anticipated under normal conditions. Enabling the diagnostic packet puts the ATMS into Diagnostic Mode but does not by itself change the Science APID from APID 528 to APID 536. The diagnostic data packet is used to gain familiarity with the instrument on-orbit, or to gain additional information on any anomalous conditions. The ATMS diagnostic packet (APID 516) contains test channel data consisting of 148 samples of test data from the lower band shelves (KAV) and 148 samples from the upper band shelves (WG). The samples monitor stable reference signals to help determine whether signal contamination is pre- or post-detection. The ATMS outputs the diagnostic packet once every 8 seconds in Diagnostic mode. The fixed packet length is 622 octets. The structure of APID 516 is illustrated in Figure 4.1.9 and the user data fields are listed in Table 4.1-9.

ATMS Diagnostic Telemetry **VERSION** **C** **DATE:** **8/1/2004**

Fixed Packet Length 622 Octets

	PACKET PRIMARY HEADER							SECONDARY HEADER	User Data Field	
	Verson No.	Packet Identification			Packet Sequence Control (PSC)		Packet Length		ATMS Diagnostic Telemetry	
		Type Indicator	Sec Hdr Flag	APID	Sequence Flags	Sequence Count		Start of Data	ATMS Diagnostic Telemetry	TOTAL
Bits	3	1	1	11	2	14	16	64	4864	4976
Octets	2				2		2	8	608	622
Value	000	0	1	204_{16}	11	000_{16}	267_{16}	varies	varies	

Secondary Header Present

Standalone Packet

CCSDS Day Segmented

	ATMS Diagnostic Telemetry														
	Start of Scan Bytes 1,2 (UTC format)	Start of Scan Bytes 3,4 (UTC format)	Start of Scan Bytes 5,6 (UTC format)	Start of Scan Bytes 7,8 (UTC format)	Scan Synch Bytes 1,2 (UTC format)	Scan Synch Bytes 3,4 (UTC format)	Scan Synch Bytes 5,6 (UTC format)	Scan Synch Bytes 7,8 (UTC format)	KAV Test Counts, Position 1	WG Test Counts, Position 1	KAV Test Counts, Positions 2-147	WG Test Counts, Positions 2-147	KAV Test Counts, Position 148	WG Test Counts, Position 148	
Word #	1	2	3	4	5	6	7	8	9	10	11, 13, 15 …301	12, 14, 16 … 302	303	304	total
Bits	16	16	16	16	16	16	16	16	16	16	2336	2336	16	16	4864
Octets	2	2	2	2	2	2	2	2	2	2	292	292	2	2	608
Value	varies	varies	varies	varies	varies	varies	varies	varies	varies	varies	varies	varies	varies	varies	

Figure 4.1-9. ATMS Diagnostic Packet Format

Check the JPSS MIS Server at https://jpssmis.gsfc.nasa.gov/frontmenu_dsp.cfm to verify that this is the correct version prior to use.

Table 4.1-9. ATMS Diagnostic Packet User Data Fields

Start Bit	Bit Size	Memonic Name	Description	Units OR State Value	Conversion Coefficients (formula or C5,C4,C3,C2,C1,C0) OR State Name	Data Type
0	16	N/A	Bytes 1&2 of UTC time code for Start of Scan time	day	N/A	U
16	32	N/A	Bytes 3-6 of UTC time code for Start of Scan time	msec of day	N/A	U
48	16	N/A	Bytes 7&8 of UTC time code for Start of Scan time	usec	N/A	U
64	16	N/A	Bytes 1&2 of UTC time code for Scan Sync Pulse time	day	N/A	U
80	32	N/A	Bytes 3-6 of UTC time code for Scan Sync Pulse time	msec of day	N/A	U
112	16	N/A	Bytes 7&8 of UTC time code for Scan Sync Pulse time	usec	N/A	U
128	16	N/A	K, KA and V band test counts at position 1	N/A	N/A	U
144	16	N/A	W and G band test counts at position 1	N/A	N/A	U
160	16	N/A	K, KA and V band test counts at position 2	N/A	N/A	U
176	16	N/A	W and G band test counts at position 2	N/A	N/A	U
192	16	N/A	K, KA and V band test counts at position 3	N/A	N/A	U
208	16	N/A	W and G band test counts at position 3	N/A	N/A	U
224	16	N/A	K, KA and V band test counts at position 4	N/A	N/A	U
240	16	N/A	W and G band test counts at position 4	N/A	N/A	U
256	16	N/A	K, KA and V band test counts at position 5	N/A	N/A	U
272	16	N/A	W and G band test counts at position 5	N/A	N/A	U
288	16	N/A	K, KA and V band test counts at position 6	N/A	N/A	U
304	16	N/A	W and G band test counts at position 6	N/A	N/A	U
320	16	N/A	K, KA and V band test counts at position 7	N/A	N/A	U
336	16	N/A	W and G band test counts at position 7	N/A	N/A	U
352	16	N/A	K, KA and V band test counts at position 8	N/A	N/A	U
368	16	N/A	W and G band test counts at position 8	N/A	N/A	U
384	16	N/A	K, KA and V band test counts at position 9	N/A	N/A	U
400	16	N/A	W and G band test counts at position 9	N/A	N/A	U
416	16	N/A	K, KA and V band test counts at position 10	N/A	N/A	U
432	16	N/A	W and G band test counts at position 10	N/A	N/A	U
448	16	N/A	K, KA and V band test counts at position 11	N/A	N/A	U
464	16	N/A	W and G band test counts at position 11	N/A	N/A	U
480	16	N/A	K, KA and V band test counts at position 12	N/A	N/A	U
496	16	N/A	W and G band test counts at position 12	N/A	N/A	U
512	16	N/A	K, KA and V band test counts at position 13	N/A	N/A	U
528	16	N/A	W and G band test counts at position 13	N/A	N/A	U
544	16	N/A	K, KA and V band test counts at position 14	N/A	N/A	U
560	16	N/A	W and G band test counts at position 14	N/A	N/A	U
576	16	N/A	K, KA and V band test counts at position 15	N/A	N/A	U
592	16	N/A	W and G band test counts at position 15	N/A	N/A	U
608	16	N/A	K, KA and V band test counts at position 16	N/A	N/A	U
624	16	N/A	W and G band test counts at position 16	N/A	N/A	U
640	16	N/A	K, KA and V band test counts at position 17	N/A	N/A	U
656	16	N/A	W and G band test counts at position 17	N/A	N/A	U
672	16	N/A	K, KA and V band test counts at position 18	N/A	N/A	U
688	16	N/A	W and G band test counts at position 18	N/A	N/A	U
704	16	N/A	K, KA and V band test counts at position 19	N/A	N/A	U
720	16	N/A	W and G band test counts at position 19	N/A	N/A	U

Check the JPSS MIS Server at https://jpssmis.gsfc.nasa.gov/frontmenu_dsp.cfm to verify that this is the correct version prior to use.

Start Bit	Bit Size	Memonic Name	Description	Units OR State Value	Conversion Coefficients (formula or C5,C4,C3,C2,C1,C0) OR State Name	Data Type
736	16	N/A	K, KA and V band test counts at position 20	N/A	N/A	U
752	16	N/A	W and G band test counts at position 20	N/A	N/A	U
768	16	N/A	K, KA and V band test counts at position 21	N/A	N/A	U
784	16	N/A	W and G band test counts at position 21	N/A	N/A	U
800	16	N/A	K, KA and V band test counts at position 22	N/A	N/A	U
816	16	N/A	W and G band test counts at position 22	N/A	N/A	U
832	16	N/A	K, KA and V band test counts at position 23	N/A	N/A	U
848	16	N/A	W and G band test counts at position 23	N/A	N/A	U
864	16	N/A	K, KA and V band test counts at position 24	N/A	N/A	U
880	16	N/A	W and G band test counts at position 24	N/A	N/A	U
896	16	N/A	K, KA and V band test counts at position 25	N/A	N/A	U
912	16	N/A	W and G band test counts at position 25	N/A	N/A	U
928	16	N/A	K, KA and V band test counts at position 26	N/A	N/A	U
944	16	N/A	W and G band test counts at position 26	N/A	N/A	U
960	16	N/A	K, KA and V band test counts at position 27	N/A	N/A	U
976	16	N/A	W and G band test counts at position 27	N/A	N/A	U
992	16	N/A	K, KA and V band test counts at position 28	N/A	N/A	U
1008	16	N/A	W and G band test counts at position 28	N/A	N/A	U
1024	16	N/A	K, KA and V band test counts at position 29	N/A	N/A	U
1040	16	N/A	W and G band test counts at position 29	N/A	N/A	U
1056	16	N/A	K, KA and V band test counts at position 30	N/A	N/A	U
1072	16	N/A	W and G band test counts at position 30	N/A	N/A	U
1088	16	N/A	K, KA and V band test counts at position 31	N/A	N/A	U
1104	16	N/A	W and G band test counts at position 31	N/A	N/A	U
1120	16	N/A	K, KA and V band test counts at position 32	N/A	N/A	U
1136	16	N/A	W and G band test counts at position 32	N/A	N/A	U
1152	16	N/A	K, KA and V band test counts at position 33	N/A	N/A	U
1168	16	N/A	W and G band test counts at position 33	N/A	N/A	U
1184	16	N/A	K, KA and V band test counts at position 34	N/A	N/A	U
1200	16	N/A	W and G band test counts at position 34	N/A	N/A	U
1216	16	N/A	K, KA and V band test counts at position 35	N/A	N/A	U
1232	16	N/A	W and G band test counts at position 35	N/A	N/A	U
1248	16	N/A	K, KA and V band test counts at position 36	N/A	N/A	U
1264	16	N/A	W and G band test counts at position 36	N/A	N/A	U
1280	16	N/A	K, KA and V band test counts at position 37	N/A	N/A	U
1296	16	N/A	W and G band test counts at position 37	N/A	N/A	U
1312	16	N/A	K, KA and V band test counts at position 38	N/A	N/A	U
1328	16	N/A	W and G band test counts at position 38	N/A	N/A	U
1344	16	N/A	K, KA and V band test counts at position 39	N/A	N/A	U
1360	16	N/A	W and G band test counts at position 39	N/A	N/A	U
1376	16	N/A	K, KA and V band test counts at position 40	N/A	N/A	U
1392	16	N/A	W and G band test counts at position 40	N/A	N/A	U
1408	16	N/A	K, KA and V band test counts at position 41	N/A	N/A	U
1424	16	N/A	W and G band test counts at position 41	N/A	N/A	U
1440	16	N/A	K, KA and V band test counts at position 42	N/A	N/A	U

Check the JPSS MIS Server at https://jpssmis.gsfc.nasa.gov/frontmenu_dsp.cfm to verify that this is the correct version prior to use.

Start Bit	Bit Size	Memonic Name	Description	Units OR State Value	Conversion Coefficients (formula or C5,C4,C3,C2,C1,C0) OR State Name	Data Type
1456	16	N/A	W and G band test counts at position4 2	N/A	N/A	U
1472	16	N/A	K, KA and V band test counts at position 43	N/A	N/A	U
1488	16	N/A	W and G band test counts at position 43	N/A	N/A	U
1504	16	N/A	K, KA and V band test counts at position 44	N/A	N/A	U
1520	16	N/A	W and G band test counts at position 44	N/A	N/A	U
1536	16	N/A	K, KA and V band test counts at position 45	N/A	N/A	U
1552	16	N/A	W and G band test counts at position 45	N/A	N/A	U
1568	16	N/A	K, KA and V band test counts at position 46	N/A	N/A	U
1584	16	N/A	W and G band test counts at position 46	N/A	N/A	U
1600	16	N/A	K, KA and V band test counts at position 47	N/A	N/A	U
1616	16	N/A	W and G band test counts at position 47	N/A	N/A	U
1632	16	N/A	K, KA and V band test counts at position 48	N/A	N/A	U
1648	16	N/A	W and G band test counts at position 48	N/A	N/A	U
1664	16	N/A	K, KA and V band test counts at position 49	N/A	N/A	U
1680	16	N/A	W and G band test counts at position 49	N/A	N/A	U
1696	16	N/A	K, KA and V band test counts at position 50	N/A	N/A	U
1712	16	N/A	W and G band test counts at position 50	N/A	N/A	U
1728	16	N/A	K, KA and V band test counts at position 51	N/A	N/A	U
1744	16	N/A	W and G band test counts at position 51	N/A	N/A	U
1760	16	N/A	K, KA and V band test counts at position 52	N/A	N/A	U
1776	16	N/A	W and G band test counts at position 52	N/A	N/A	U
1792	16	N/A	K, KA and V band test counts at position 53	N/A	N/A	U
1808	16	N/A	W and G band test counts at position 53	N/A	N/A	U
1824	16	N/A	K, KA and V band test counts at position 54	N/A	N/A	U
1840	16	N/A	W and G band test counts at position 54	N/A	N/A	U
1856	16	N/A	K, KA and V band test counts at position 55	N/A	N/A	U
1872	16	N/A	W and G band test counts at position 55	N/A	N/A	U
1888	16	N/A	K, KA and V band test counts at position 56	N/A	N/A	U
1904	16	N/A	W and G band test counts at position 56	N/A	N/A	U
1920	16	N/A	K, KA and V band test counts at position 57	N/A	N/A	U
1936	16	N/A	W and G band test counts at position 57	N/A	N/A	U
1952	16	N/A	K, KA and V band test counts at position 58	N/A	N/A	U
1968	16	N/A	W and G band test counts at position 58	N/A	N/A	U
1984	16	N/A	K, KA and V band test counts at position 59	N/A	N/A	U
2000	16	N/A	W and G band test counts at position 59	N/A	N/A	U
2016	16	N/A	K, KA and V band test counts at position 60	N/A	N/A	U
2032	16	N/A	W and G band test counts at position 60	N/A	N/A	U
2048	16	N/A	K, KA and V band test counts at position 61	N/A	N/A	U
2064	16	N/A	W and G band test counts at position 61	N/A	N/A	U
2080	16	N/A	K, KA and V band test counts at position 62	N/A	N/A	U
2096	16	N/A	W and G band test counts at position 62	N/A	N/A	U
2112	16	N/A	K, KA and V band test counts at position 63	N/A	N/A	U
2128	16	N/A	W and G band test counts at position 63	N/A	N/A	U
2144	16	N/A	K, KA and V band test counts at position 64	N/A	N/A	U

Check the JPSS MIS Server at https://jpssmis.gsfc.nasa.gov/frontmenu_dsp.cfm to verify that this is the correct version prior to use.

Start Bit	Bit Size	Memonic Name	Description	Units OR State Value	Conversion Coefficients (formula or C5,C4,C3,C2,C1,C0) OR State Name	Data Type
2160	16	N/A	W and G band test counts at position 64	N/A	N/A	U
2176	16	N/A	K, KA and V band test counts at position 65	N/A	N/A	U
2192	16	N/A	W and G band test counts at position 65	N/A	N/A	U
2208	16	N/A	K, KA and V band test counts at position 66	N/A	N/A	U
2224	16	N/A	W and G band test counts at position 66	N/A	N/A	U
2240	16	N/A	K, KA and V band test counts at position 67	N/A	N/A	U
2256	16	N/A	W and G band test counts at position 67	N/A	N/A	U
2272	16	N/A	K, KA and V band test counts at position 68	N/A	N/A	U
2288	16	N/A	W and G band test counts at position 68	N/A	N/A	U
2304	16	N/A	K, KA and V band test counts at position 69	N/A	N/A	U
2320	16	N/A	W and G band test counts at position 69	N/A	N/A	U
2336	16	N/A	K, KA and V band test counts at position 70	N/A	N/A	U
2352	16	N/A	W and G band test counts at position 70	N/A	N/A	U
2368	16	N/A	K, KA and V band test counts at position 71	N/A	N/A	U
2384	16	N/A	W and G band test counts at position 71	N/A	N/A	U
2400	16	N/A	K, KA and V band test counts at position 72	N/A	N/A	U
2416	16	N/A	W and G band test counts at position 72	N/A	N/A	U
2432	16	N/A	K, KA and V band test counts at position 73	N/A	N/A	U
2448	16	N/A	W and G band test counts at position 73	N/A	N/A	U
2464	16	N/A	K, KA and V band test counts at position 74	N/A	N/A	U
2480	16	N/A	W and G band test counts at position 74	N/A	N/A	U
2496	16	N/A	K, KA and V band test counts at position 75	N/A	N/A	U
2512	16	N/A	W and G band test counts at position 75	N/A	N/A	U
2528	16	N/A	K, KA and V band test counts at position 76	N/A	N/A	U
2544	16	N/A	W and G band test counts at position 76	N/A	N/A	U
2560	16	N/A	K, KA and V band test counts at position 77	N/A	N/A	U
2576	16	N/A	W and G band test counts at position 77	N/A	N/A	U
2592	16	N/A	K, KA and V band test counts at position 78	N/A	N/A	U
2608	16	N/A	W and G band test counts at position 78	N/A	N/A	U
2624	16	N/A	K, KA and V band test counts at position 79	N/A	N/A	U
2640	16	N/A	W and G band test counts at position 79	N/A	N/A	U
2656	16	N/A	K, KA and V band test counts at position 80	N/A	N/A	U
2672	16	N/A	W and G band test counts at position 80	N/A	N/A	U
2688	16	N/A	K, KA and V band test counts at position 81	N/A	N/A	U
2704	16	N/A	W and G band test counts at position 81	N/A	N/A	U
2720	16	N/A	K, KA and V band test counts at position 82	N/A	N/A	U
2736	16	N/A	W and G band test counts at position 82	N/A	N/A	U
2752	16	N/A	K, KA and V band test counts at position 83	N/A	N/A	U
2768	16	N/A	W and G band test counts at position 83	N/A	N/A	U
2784	16	N/A	K, KA and V band test counts at position 84	N/A	N/A	U
2800	16	N/A	W and G band test counts at position 84	N/A	N/A	U
2816	16	N/A	K, KA and V band test counts at position 85	N/A	N/A	U
2832	16	N/A	W and G band test counts at position 85	N/A	N/A	U
2848	16	N/A	K, KA and V band test counts at position 86	N/A	N/A	U

Start Bit	Bit Size	Memonic Name	Description	Units OR State Value	Conversion Coefficients (formula or C5,C4,C3,C2,C1,C0) OR State Name	Data Type
2864	16	N/A	W and G band test counts at position 86	N/A	N/A	U
2880	16	N/A	K, KA and V band test counts at position 87	N/A	N/A	U
2896	16	N/A	W and G band test counts at position 87	N/A	N/A	U
2912	16	N/A	K, KA and V band test counts at position 88	N/A	N/A	U
2928	16	N/A	W and G band test counts at position 88	N/A	N/A	U
2944	16	N/A	K, KA and V band test counts at position 89	N/A	N/A	U
2960	16	N/A	W and G band test counts at position 89	N/A	N/A	U
2976	16	N/A	K, KA and V band test counts at position 90	N/A	N/A	U
2992	16	N/A	W and G band test counts at position 90	N/A	N/A	U
3008	16	N/A	K, KA and V band test counts at position 91	N/A	N/A	U
3024	16	N/A	W and G band test counts at position 91	N/A	N/A	U
3040	16	N/A	K, KA and V band test counts at position 92	N/A	N/A	U
3056	16	N/A	W and G band test counts at position 92	N/A	N/A	U
3072	16	N/A	K, KA and V band test counts at position 93	N/A	N/A	U
3088	16	N/A	W and G band test counts at position 93	N/A	N/A	U
3104	16	N/A	K, KA and V band test counts at position 94	N/A	N/A	U
3120	16	N/A	W and G band test counts at position 94	N/A	N/A	U
3136	16	N/A	K, KA and V band test counts at position 95	N/A	N/A	U
3152	16	N/A	W and G band test counts at position 95	N/A	N/A	U
3168	16	N/A	K, KA and V band test counts at position 96	N/A	N/A	U
3184	16	N/A	W and G band test counts at position 96	N/A	N/A	U
3200	16	N/A	K, KA and V band test counts at position 97	N/A	N/A	U
3216	16	N/A	W and G band test counts at position 97	N/A	N/A	U
3232	16	N/A	K, KA and V band test counts at position 98	N/A	N/A	U
3248	16	N/A	W and G band test counts at position 98	N/A	N/A	U
3264	16	N/A	K, KA and V band test counts at position 99	N/A	N/A	U
3280	16	N/A	W and G band test counts at position 99	N/A	N/A	U
3296	16	N/A	K, KA and V band test counts at position 100	N/A	N/A	U
3312	16	N/A	W and G band test counts at position 100	N/A	N/A	U
3328	16	N/A	K, KA and V band test counts at position 101	N/A	N/A	U
3344	16	N/A	W and G band test counts at position 101	N/A	N/A	U
3360	16	N/A	K, KA and V band test counts at position 102	N/A	N/A	U
3376	16	N/A	W and G band test counts at position 102	N/A	N/A	U
3392	16	N/A	K, KA and V band test counts at position 103	N/A	N/A	U
3408	16	N/A	W and G band test counts at position 103	N/A	N/A	U
3424	16	N/A	K, KA and V band test counts at position 104	N/A	N/A	U
3440	16	N/A	W and G band test counts at position 104	N/A	N/A	U
3456	16	N/A	K, KA and V band test counts at position 105	N/A	N/A	U
3472	16	N/A	W and G band test counts at position 105	N/A	N/A	U
3488	16	N/A	K, KA and V band test counts at position 106	N/A	N/A	U
3504	16	N/A	W and G band test counts at position 106	N/A	N/A	U
3520	16	N/A	K, KA and V band test counts at position 107	N/A	N/A	U
3536	16	N/A	W and G band test counts at position 107	N/A	N/A	U
3552	16	N/A	K, KA and V band test counts at position 108	N/A	N/A	U

Check the JPSS MIS Server at https://jpssmis.gsfc.nasa.gov/frontmenu_dsp.cfm to verify that this is the correct version prior to use.

Start Bit	Bit Size	Memonic Name	Description	Units OR State Value	Conversion Coefficients (formula or C5,C4,C3,C2,C1,C0) OR State Name	Data Type
3568	16	N/A	W and G band test counts at position 108	N/A	N/A	U
3584	16	N/A	K, KA and V band test counts at position 109	N/A	N/A	U
3600	16	N/A	W and G band test counts at position 109	N/A	N/A	U
3616	16	N/A	K, KA and V band test counts at position 110	N/A	N/A	U
3632	16	N/A	W and G band test counts at position 110	N/A	N/A	U
3648	16	N/A	K, KA and V band test counts at position 111	N/A	N/A	U
3664	16	N/A	W and G band test counts at position 111	N/A	N/A	U
3680	16	N/A	K, KA and V band test counts at position 112	N/A	N/A	U
3696	16	N/A	W and G band test counts at position 112	N/A	N/A	U
3712	16	N/A	K, KA and V band test counts at position 113	N/A	N/A	U
3728	16	N/A	W and G band test counts at position 113	N/A	N/A	U
3744	16	N/A	K, KA and V band test counts at position 114	N/A	N/A	U
3760	16	N/A	W and G band test counts at position 114	N/A	N/A	U
3776	16	N/A	K, KA and V band test counts at position 115	N/A	N/A	U
3792	16	N/A	W and G band test counts at position 115	N/A	N/A	U
3808	16	N/A	K, KA and V band test counts at position 116	N/A	N/A	U
3824	16	N/A	W and G band test counts at position 116	N/A	N/A	U
3840	16	N/A	K, KA and V band test counts at position 117	N/A	N/A	U
3856	16	N/A	W and G band test counts at position 117	N/A	N/A	U
3872	16	N/A	K, KA and V band test counts at position 118	N/A	N/A	U
3888	16	N/A	W and G band test counts at position 118	N/A	N/A	U
3904	16	N/A	K, KA and V band test counts at position 119	N/A	N/A	U
3920	16	N/A	W and G band test counts at position 119	N/A	N/A	U
3936	16	N/A	K, KA and V band test counts at position 120	N/A	N/A	U
3952	16	N/A	W and G band test counts at position 120	N/A	N/A	U
3968	16	N/A	K, KA and V band test counts at position 121	N/A	N/A	U
3984	16	N/A	W and G band test counts at position 121	N/A	N/A	U
4000	16	N/A	K, KA and V band test counts at position 122	N/A	N/A	U
4016	16	N/A	W and G band test counts at position 122	N/A	N/A	U
4032	16	N/A	K, KA and V band test counts at position 123	N/A	N/A	U
4048	16	N/A	W and G band test counts at position 123	N/A	N/A	U
4064	16	N/A	K, KA and V band test counts at position 124	N/A	N/A	U
4080	16	N/A	W and G band test counts at position 124	N/A	N/A	U
4096	16	N/A	K, KA and V band test counts at position 125	N/A	N/A	U
4112	16	N/A	W and G band test counts at position 125	N/A	N/A	U
4128	16	N/A	K, KA and V band test counts at position 126	N/A	N/A	U
4144	16	N/A	W and G band test counts at position 126	N/A	N/A	U
4160	16	N/A	K, KA and V band test counts at position 127	N/A	N/A	U
4176	16	N/A	W and G band test counts at position 127	N/A	N/A	U
4192	16	N/A	K, KA and V band test counts at position 128	N/A	N/A	U
4208	16	N/A	W and G band test counts at position 128	N/A	N/A	U
4224	16	N/A	K, KA and V band test counts at position 129	N/A	N/A	U
4240	16	N/A	W and G band test counts at position 129	N/A	N/A	U
4256	16	N/A	K, KA and V band test counts at position 130	N/A	N/A	U

Start Bit	Bit Size	Memonic Name	Description	Units OR State Value	Conversion Coefficients (formula or C5,C4,C3,C2,C1,C0) OR State Name	Data Type
4272	16	N/A	W and G band test counts at position 130	N/A	N/A	U
4288	16	N/A	K, KA and V band test counts at position 131	N/A	N/A	U
4304	16	N/A	W and G band test counts at position 131	N/A	N/A	U
4320	16	N/A	K, KA and V band test counts at position 132	N/A	N/A	U
4336	16	N/A	W and G band test counts at position 13 2	N/A	N/A	U
4352	16	N/A	K, KA and V band test counts at position 133	N/A	N/A	U
4368	16	N/A	W and G band test counts at position 133	N/A	N/A	U
4384	16	N/A	K, KA and V band test counts at position 134	N/A	N/A	U
4400	16	N/A	W and G band test counts at position 134	N/A	N/A	U
4416	16	N/A	K, KA and V band test counts at position 135	N/A	N/A	U
4432	16	N/A	W and G band test counts at position 135	N/A	N/A	U
4448	16	N/A	K, KA and V band test counts at position 136	N/A	N/A	U
4464	16	N/A	W and G band test counts at position 136	N/A	N/A	U
4480	16	N/A	K, KA and V band test counts at position 137	N/A	N/A	U
4496	16	N/A	W and G band test counts at position 137	N/A	N/A	U
4512	16	N/A	K, KA and V band test counts at position 138	N/A	N/A	U
4528	16	N/A	W and G band test counts at position 138	N/A	N/A	U
4544	16	N/A	K, KA and V band test counts at position 139	N/A	N/A	U
4560	16	N/A	W and G band test counts at position 139	N/A	N/A	U
4576	16	N/A	K, KA and V band test counts at position 140	N/A	N/A	U
4592	16	N/A	W and G band test counts at position 140	N/A	N/A	U
4608	16	N/A	K, KA and V band test counts at position 141	N/A	N/A	U
4624	16	N/A	W and G band test counts at position 141	N/A	N/A	U
4640	16	N/A	K, KA and V band test counts at position 142	N/A	N/A	U
4656	16	N/A	W and G band test counts at position 142	N/A	N/A	U
4672	16	N/A	K, KA and V band test counts at position 143	N/A	N/A	U
4688	16	N/A	W and G band test counts at position 143	N/A	N/A	U
4704	16	N/A	K, KA and V band test counts at position 144	N/A	N/A	U
4720	16	N/A	W and G band test counts at position 144	N/A	N/A	U
4736	16	N/A	K, KA and V band test counts at position 145	N/A	N/A	U
4752	16	N/A	W and G band test counts at position 145	N/A	N/A	U
4768	16	N/A	K, KA and V band test counts at position 146	N/A	N/A	U
4784	16	N/A	W and G band test counts at position 146	N/A	N/A	U
4800	16	N/A	K, KA and V band test counts at position 147	N/A	N/A	U
4816	16	N/A	W and G band test counts at position 147	N/A	N/A	U
4832	16	N/A	K, KA and V band test counts at position 148	N/A	N/A	U
4848	16	N/A	W and G band test counts at position 148	N/A	N/A	U

4.1.4.9 Dwell Data

The ATMS instrument reports selected housekeeping telemetry channels at the same rate as a radiometric signal channel (up to 55.5 Hz) in the dwell packet. The telemetry item is commanded to be one of the following Data Word Numbers from the Engineering Data Health and Status.

Data Word Number	Telemetry Mnemonic
2 to 25	SPA_P5V_A_VMON(SPA_P5V_B_VMON) thru G2_IF_PRT
30 to 47	RCVPS_A_PRT thru 2W_GND_A(2W_GND_B)
56 to 72	SD_P5V_VMON thru SD_MODE_ERRORS

The Dwell data packet, APID 517, is sent once every 8/3 seconds after a command request when the ATMS is in diagnostic mode. It has a fixed length of 312 octets. The structure of APID 517 is illustrated in Figure 4.1-10 and the user data fields are listed in Table 4.1-10.

ATMS Dwell Telemetry Packet **VERSION C** **DATE: 8/1/2004**

Fixed Packet Length 312 Octets

	PACKET PRIMARY HEADER							SECONDARY HEADER	User Data Field					
	Verson No.	Packet Identification			Packet Sequence Control (PSC)		Packet Length		ATMS Dwell Telemetry					
		Type Indicator	Sec Hdr Flag	APID	Sequence Flags	Sequence Count		Start of Data	Telemetry Item Word Number	Dwell Sample No. 1	Dwell Sample No. 2	Dwell Sample No. 3 to 147 … … … … … …	Dwell Sample No. 148	TOTAL
Bits	3	1	1	11	2	14	16	64	16	16	16	2320	16	2496
Octets	2				2		2	8	2	2	2	290	2	312
Value	000	0	1	205_{16}	11	0…0	131_{16}	varies	varies	varies	varies	varies	varies	

0 = Telemetry Packet

Secondary Header Present

Standalone Packet

CCSDS Day Segmented

This is the word number in the corresponding Housekeeping, LEO&A and Health and Status packets. Valid Range = 2-25, 30-47, 56-72.

Figure 4.1-10. ATMS Dwell Packet Format

Check the JPSS MIS Server at https://jpssmis.gsfc.nasa.gov/frontmenu_dsp.cfm to verify that this is the correct version prior to use.

Table 4.1-10. ATMS Dwell Packet User Data Fields

Start Bit	Bit Size	Memonic Name	Description	Units OR State Value	Conversion Coefficients (formula or C5,C4,C3,C2,C1,C0) OR State Name	Data Type
0	16	N/A	Telemetry Item Word #	N/A	N/A	U
16	16	N/A	Dwell Sample No. 1	N/A	N/A	U
32	16	N/A	Dwell Sample No. 2	N/A	N/A	U
48	16	N/A	Dwell Sample No. 3	N/A	N/A	U
64	16	N/A	Dwell Sample No. 4	N/A	N/A	U
80	16	N/A	Dwell Sample No. 5	N/A	N/A	U
96	16	N/A	Dwell Sample No. 6	N/A	N/A	U
112	16	N/A	Dwell Sample No. 7	N/A	N/A	U
128	16	N/A	Dwell Sample No. 8	N/A	N/A	U
144	16	N/A	Dwell Sample No. 9	N/A	N/A	U
160	16	N/A	Dwell Sample No. 10	N/A	N/A	U
176	16	N/A	Dwell Sample No. 11	N/A	N/A	U
192	16	N/A	Dwell Sample No. 12	N/A	N/A	U
208	16	N/A	Dwell Sample No. 13	N/A	N/A	U
224	16	N/A	Dwell Sample No. 14	N/A	N/A	U
240	16	N/A	Dwell Sample No. 15	N/A	N/A	U
256	16	N/A	Dwell Sample No. 16	N/A	N/A	U
272	16	N/A	Dwell Sample No. 17	N/A	N/A	U
288	16	N/A	Dwell Sample No. 18	N/A	N/A	U
304	16	N/A	Dwell Sample No. 19	N/A	N/A	U
320	16	N/A	Dwell Sample No. 20	N/A	N/A	U
336	16	N/A	Dwell Sample No. 21	N/A	N/A	U
352	16	N/A	Dwell Sample No. 22	N/A	N/A	U
368	16	N/A	Dwell Sample No. 23	N/A	N/A	U
384	16	N/A	Dwell Sample No. 24	N/A	N/A	U
400	16	N/A	Dwell Sample No. 25	N/A	N/A	U
416	16	N/A	Dwell Sample No. 26	N/A	N/A	U
432	16	N/A	Dwell Sample No. 27	N/A	N/A	U
448	16	N/A	Dwell Sample No. 28	N/A	N/A	U
464	16	N/A	Dwell Sample No. 29	N/A	N/A	U
480	16	N/A	Dwell Sample No. 30	N/A	N/A	U
496	16	N/A	Dwell Sample No. 31	N/A	N/A	U
512	16	N/A	Dwell Sample No. 32	N/A	N/A	U
528	16	N/A	Dwell Sample No. 33	N/A	N/A	U
544	16	N/A	Dwell Sample No. 34	N/A	N/A	U
560	16	N/A	Dwell Sample No. 35	N/A	N/A	U

Check the JPSS MIS Server at https://jpssmis.gsfc.nasa.gov/frontmenu_dsp.cfm to verify that this is the correct version prior to use.

Start Bit	Bit Size	Memonic Name	Description	Units OR State Value	Conversion Coefficients (formula or C5,C4,C3,C2,C1,C0) OR State Name	Data Type
576	16	N/A	Dwell Sample No. 36	N/A	N/A	U
592	16	N/A	Dwell Sample No. 37	N/A	N/A	U
608	16	N/A	Dwell Sample No. 38	N/A	N/A	U
624	16	N/A	Dwell Sample No. 39	N/A	N/A	U
640	16	N/A	Dwell Sample No. 40	N/A	N/A	U
656	16	N/A	Dwell Sample No. 41	N/A	N/A	U
672	16	N/A	Dwell Sample No. 42	N/A	N/A	U
688	16	N/A	Dwell Sample No. 43	N/A	N/A	U
704	16	N/A	Dwell Sample No. 44	N/A	N/A	U
720	16	N/A	Dwell Sample No. 45	N/A	N/A	U
736	16	N/A	Dwell Sample No. 46	N/A	N/A	U
752	16	N/A	Dwell Sample No. 47	N/A	N/A	U
768	16	N/A	Dwell Sample No. 48	N/A	N/A	U
784	16	N/A	Dwell Sample No. 49	N/A	N/A	U
800	16	N/A	Dwell Sample No. 50	N/A	N/A	U
816	16	N/A	Dwell Sample No. 51	N/A	N/A	U
832	16	N/A	Dwell Sample No. 52	N/A	N/A	U
848	16	N/A	Dwell Sample No. 53	N/A	N/A	U
864	16	N/A	Dwell Sample No. 54	N/A	N/A	U
880	16	N/A	Dwell Sample No. 55	N/A	N/A	U
896	16	N/A	Dwell Sample No. 56	N/A	N/A	U
912	16	N/A	Dwell Sample No. 57	N/A	N/A	U
928	16	N/A	Dwell Sample No. 58	N/A	N/A	U
944	16	N/A	Dwell Sample No. 59	N/A	N/A	U
960	16	N/A	Dwell Sample No. 60	N/A	N/A	U
976	16	N/A	Dwell Sample No. 61	N/A	N/A	U
992	16	N/A	Dwell Sample No. 62	N/A	N/A	U
1008	16	N/A	Dwell Sample No. 63	N/A	N/A	U
1024	16	N/A	Dwell Sample No. 64	N/A	N/A	U
1040	16	N/A	Dwell Sample No. 65	N/A	N/A	U
1056	16	N/A	Dwell Sample No. 66	N/A	N/A	U
1072	16	N/A	Dwell Sample No. 67	N/A	N/A	U
1088	16	N/A	Dwell Sample No. 68	N/A	N/A	U
1104	16	N/A	Dwell Sample No. 69	N/A	N/A	U
1120	16	N/A	Dwell Sample No. 70	N/A	N/A	U
1136	16	N/A	Dwell Sample No. 71	N/A	N/A	U
1152	16	N/A	Dwell Sample No. 72	N/A	N/A	U

Check the JPSS MIS Server at https://jpssmis.gsfc.nasa.gov/frontmenu_dsp.cfm to verify that this is the correct version prior to use.

Start Bit	Bit Size	Memonic Name	Description	Units OR State Value	Conversion Coefficients (formula or C5,C4,C3,C2,C1,C0) OR State Name	Data Type
1168	16	N/A	Dwell Sample No. 73	N/A	N/A	U
1184	16	N/A	Dwell Sample No. 74	N/A	N/A	U
1200	16	N/A	Dwell Sample No. 75	N/A	N/A	U
1216	16	N/A	Dwell Sample No. 76	N/A	N/A	U
1232	16	N/A	Dwell Sample No. 77	N/A	N/A	U
1248	16	N/A	Dwell Sample No. 78	N/A	N/A	U
1264	16	N/A	Dwell Sample No. 79	N/A	N/A	U
1280	16	N/A	Dwell Sample No. 80	N/A	N/A	U
1296	16	N/A	Dwell Sample No. 81	N/A	N/A	U
1312	16	N/A	Dwell Sample No. 82	N/A	N/A	U
1328	16	N/A	Dwell Sample No. 83	N/A	N/A	U
1344	16	N/A	Dwell Sample No. 84	N/A	N/A	U
1360	16	N/A	Dwell Sample No. 85	N/A	N/A	U
1376	16	N/A	Dwell Sample No. 86	N/A	N/A	U
1392	16	N/A	Dwell Sample No. 87	N/A	N/A	U
1408	16	N/A	Dwell Sample No. 88	N/A	N/A	U
1424	16	N/A	Dwell Sample No. 89	N/A	N/A	U
1440	16	N/A	Dwell Sample No. 90	N/A	N/A	U
1456	16	N/A	Dwell Sample No. 91	N/A	N/A	U
1472	16	N/A	Dwell Sample No. 92	N/A	N/A	U
1488	16	N/A	Dwell Sample No. 93	N/A	N/A	U
1504	16	N/A	Dwell Sample No. 94	N/A	N/A	U
1520	16	N/A	Dwell Sample No. 95	N/A	N/A	U
1536	16	N/A	Dwell Sample No. 96	N/A	N/A	U
1552	16	N/A	Dwell Sample No. 97	N/A	N/A	U
1568	16	N/A	Dwell Sample No. 98	N/A	N/A	U
1584	16	N/A	Dwell Sample No. 99	N/A	N/A	U
1600	16	N/A	Dwell Sample No. 100	N/A	N/A	U
1616	16	N/A	Dwell Sample No. 101	N/A	N/A	U
1632	16	N/A	Dwell Sample No. 102	N/A	N/A	U
1648	16	N/A	Dwell Sample No. 103	N/A	N/A	U
1664	16	N/A	Dwell Sample No. 104	N/A	N/A	U
1680	16	N/A	Dwell Sample No. 105	N/A	N/A	U
1696	16	N/A	Dwell Sample No. 106	N/A	N/A	U
1712	16	N/A	Dwell Sample No. 107	N/A	N/A	U
1728	16	N/A	Dwell Sample No. 108	N/A	N/A	U
1744	16	N/A	Dwell Sample No. 109	N/A	N/A	U

Check the JPSS MIS Server at https://jpssmis.gsfc.nasa.gov/frontmenu_dsp.cfm to verify that this is the correct version prior to use.

Start Bit	Bit Size	Memonic Name	Description	Units OR State Value	Conversion Coefficients (formula or C5,C4,C3,C2,C1,C0) OR State Name	Data Type
1760	16	N/A	Dwell Sample No. 110	N/A	N/A	U
1776	16	N/A	Dwell Sample No. 111	N/A	N/A	U
1792	16	N/A	Dwell Sample No. 112	N/A	N/A	U
1808	16	N/A	Dwell Sample No. 113	N/A	N/A	U
1824	16	N/A	Dwell Sample No. 114	N/A	N/A	U
1840	16	N/A	Dwell Sample No. 115	N/A	N/A	U
1856	16	N/A	Dwell Sample No. 116	N/A	N/A	U
1872	16	N/A	Dwell Sample No. 117	N/A	N/A	U
1888	16	N/A	Dwell Sample No. 118	N/A	N/A	U
1904	16	N/A	Dwell Sample No. 119	N/A	N/A	U
1920	16	N/A	Dwell Sample No. 120	N/A	N/A	U
1936	16	N/A	Dwell Sample No. 121	N/A	N/A	U
1952	16	N/A	Dwell Sample No. 122	N/A	N/A	U
1968	16	N/A	Dwell Sample No. 123	N/A	N/A	U
1984	16	N/A	Dwell Sample No. 124	N/A	N/A	U
2000	16	N/A	Dwell Sample No. 125	N/A	N/A	U
2016	16	N/A	Dwell Sample No. 126	N/A	N/A	U
2032	16	N/A	Dwell Sample No. 127	N/A	N/A	U
2048	16	N/A	Dwell Sample No. 128	N/A	N/A	U
2064	16	N/A	Dwell Sample No. 129	N/A	N/A	U
2080	16	N/A	Dwell Sample No. 130	N/A	N/A	U
2096	16	N/A	Dwell Sample No. 131	N/A	N/A	U
2112	16	N/A	Dwell Sample No. 132	N/A	N/A	U
2128	16	N/A	Dwell Sample No. 133	N/A	N/A	U
2144	16	N/A	Dwell Sample No. 134	N/A	N/A	U
2160	16	N/A	Dwell Sample No. 135	N/A	N/A	U
2176	16	N/A	Dwell Sample No. 136	N/A	N/A	U
2192	16	N/A	Dwell Sample No. 137	N/A	N/A	U
2208	16	N/A	Dwell Sample No. 138	N/A	N/A	U
2224	16	N/A	Dwell Sample No. 139	N/A	N/A	U
2240	16	N/A	Dwell Sample No. 140	N/A	N/A	U
2256	16	N/A	Dwell Sample No. 141	N/A	N/A	U
2272	16	N/A	Dwell Sample No. 142	N/A	N/A	U
2288	16	N/A	Dwell Sample No. 143	N/A	N/A	U
2304	16	N/A	Dwell Sample No. 144	N/A	N/A	U
2320	16	N/A	Dwell Sample No. 145	N/A	N/A	U
2336	16	N/A	Dwell Sample No. 146	N/A	N/A	U
2352	16	N/A	Dwell Sample No. 147	N/A	N/A	U
2368	16	N/A	Dwell Sample No. 148	N/A	N/A	U

Check the JPSS MIS Server at https://jpssmis.gsfc.nasa.gov/frontmenu_dsp.cfm to verify that this is the correct version prior to use.

4.1.4.10 Memory Dump

Memory Dump packets (APID 524) are generated in response to a memory dump command. To confirm a memory load, the operator can compare the Memory Dump contents to what was loaded or calculate a 16-bit checksum of the load, send a Memory Checksum Command to have ATMS return its checksum of the received load and then compare the ground calculated checksum with the one ATMS calculated. The checksum is defined as the 16-bit sum of the 16-bit words over the memory range with the overflow discarded. The memory dump command can request memory from program RAM, data RAM, an I/O address, or the SDE. The ATMS Memory Interface technical memo, TM-04-161A, discussed these sections of the ATMS memory in greater detail. A memory dump request can request any size dump up to and including a complete dump of any one of the ATMS memory locations. The first memory dump packet user data field contains the type of memory, the memory start address, number of words to follow in the dump, and the actual memory data (contents of the memory data field). The packet is variable in length (up to 1024 octets) with an integral even number of octets. The Start of Data field (Secondary Header) in the memory dump packet indicates the time the dump packet was created.

Multiple dump packets are needed in order to retrieve the sections of memory larger than 1002 octets. For dumps larger than 1002 octets, all packets will be flagged as standalone and have secondary header timestamps with the time each individual packet was created. The Number of Words to Follow field always indicates the total number of words remaining in the dump. Since the CCSDS recommendations for grouped packets is not employed for the multiple packet dump (Packet Sequence Flag will always indicate standalone packets), sequencing of packets can be accomplished using either one or both the Packet Sequence field (Packet Sequence Control) and/or the Start of Data field (Secondary Header). Alternatively, larger blocks of memory may be dumped via multiple dump requests for 1002 octets or less. Each dump packet will then be of the format shown in Figure 4.1-11.

The maximum rate of memory dump packets is limited to 30 kbps, the maximum ATMS rate for mission data. Memory dump packets are sent at a rate that will not exceed the 30 kbps rate when combined with other ATMS mission data. The packet structure of APID 524 is illustrated in Figure 4.1-11 to Figure 4.1-14 and the user data fields are listed in Table 4.1-11.

Check the JPSS MIS Server at https://jpssmis.gsfc.nasa.gov/frontmenu_dsp.cfm to verify that this is the correct version prior to use.

STANDALONE PACKET

Variable Packet Length: up to 1024 Octets

	PACKET PRIMARY HEADER							SECONDARY HEADER	User Data Field				
	Verson No.	Packet Identification			Packet Sequence Control (PSC)		Packet Length		ATMS Memory Dump				
		Type Indicator	Sec Hdr Flag	APID	Sequence Flags	Sequence Count		Start of Scan	Type	Memory Start Address	Number of Words to Follow	Memory Data Field	TOTAL
Bits	3	1	1	11	2	14	16	64	2	30	32	up to 8016	8192
Octets	2				2		2	8	4		4	up to 1002	1024
Value	000	0	1	$20C_{16}$	11	0…0	varies	varies	varies	varies	varies	varies	

0 = Telemetry Packet

Secondary Header Present

11 = Standalone Packet

CCSDS Day Segmented

0=Prog
1=Data
2=I/O
3=SDE

Figure 4.1-11. ATMS Memory Dump Standalone Packet Format

INITIAL PACKET

Fixed Packet Length: 1024 Octets

	PACKET PRIMARY HEADER							SECONDARY HEADER	User Data Field				
	Verson No.	Packet Identification			Packet Sequence Control (PSC)		Packet Length		ATMS Memory Dump				
		Type Indicator	Sec Hdr Flag	APID	Sequence Flags	Sequence Count		Start of Scan	Type	Memory Start Address	Number of Words to Follow	Memory Data Field	TOTAL
Bits	3	1	1	11	2	14	16	64	2	30	32	8016	8192
Octets	2				2		2	8	4		4	1002	1024
Value	000	0	1	$20C_{16}$	11	0…0	$3F9_{16}$	varies	varies	varies	varies	varies	

0 = Telemetry Packet

Secondary Header Present

11 = Standalone Packet

CCSDS Day Segmented

0=Prog
1=Data
2=I/O
3=SDE

Figure 4.1-12. ATMS Memory Dump Initial Packet Forma

Check the JPSS MIS Server at https://jpssmis.gsfc.nasa.gov/frontmenu_dsp.cfm to verify that this is the correct version prior to use.

FOLLOW-ON PACKET

Fixed Packet Length: 1024 Octets

	PACKET PRIMARY HEADER							SECONDARY HEADER	User Data Field	
	Verson No.	Packet Identification			Packet Sequence Control (PSC)		Packet Length		ATMS Memory Dump	
		Type Indicator	Sec Hdr Flag	APID	Sequence Flags	Sequence Count		Start of Scan	Memory Data Field	TOTAL
Bits	3	1	1	11	2	14	16	64	8080	8192
Octets	2				2		2	8	1010	1024
Value	000	0	1	$20C_{16}$	11	varies	$3F9_{16}$	varies	varies	

0 = Telemetry Packet

Secondary Header Present

11 = Standalone Packet

CCSDS Day Segmented

Figure 4.1-13. ATMS Memory Dump Follow-on Packet Format

FINAL PACKET

Variable Packet Length: up to 1024 Octets

	PACKET PRIMARY HEADER							SECONDARY HEADER	User Data Field	
	Verson No.	Packet Identification			Packet Sequence Control (PSC)		Packet Length		ATMS Memory Dump	
		Type Indicator	Sec Hdr Flag	APID	Sequence Flags	Sequence Count		Start of Scan	Memory Data Field	TOTAL
Bits	3	1	1	11	2	14	16	64	up to 8080	8192
Octets	2				2		2	8	up to 1010	1024
Value	000	0	1	$20C_{16}$	11	varies	varies	varies	varies	

0 = Telemetry Packet

Secondary Header Present

11 = Standalone Packet

CCSDS Day Segmented

Figure 4.1-14. ATMS Memory Dump Final Packet Format

Table 4.1-11. ATMS Memory Dump Packet User Data Fields

Start Bit	Bit Size	Memonic Name	Description	Units OR State Value	Conversion Coefficients (formula or C5,C4,C3,C2,C1,C0) OR State Name	Data Type
0	2	N/A	Memory Dump Type	0 1 2 3	Pro Data I/O SDE	B
2	30	N/A	Start Address of Memory Dump	N/A	N/A	U
32	32	N/A	Number of 16-bit Words to Follow	N/A	N/A	U
64	variable	N/A	Memory Data Field	N/A	N/A	U

Check the JPSS MIS Server at https://jpssmis.gsfc.nasa.gov/frontmenu_dsp.cfm to verify that this is the correct version prior to use.

4.1.4.11 Test Packet

When commanded, ATMS will output one Test packet every time it is polled (12 Hz) until disabled by command. The Test packet consists of a packet header with APID 514 and a fixed data pattern of 250 'CC' hex characters for a total of 256 bytes. Figure 4.1-15 shows the format of the ATMS Test Packet.

	PACKET PRIMARY HEADER							User Data Field	
	Verson No.	Packet Identification			Packet Sequence		Packet Length	Test Pattern	
		Type Indicator	Sec Hdr Flag	APID	Sequence Flags	Sequence Count			TOTAL
Bits	3	1	1	11	2	14	16	2000	2048
Octets	2				2		2	250	256
Value	000	0	0	0x202	11	varies	0x00F9	repeating 0xCC	

Telemetry Packet

Secondary Header Not Present

Figure 4.1-15. ATMS Test Packet Format

Check the JPSS MIS Server at https://jpssmis.gsfc.nasa.gov/frontmenu_dsp.cfm to verify that this is the correct version prior to use.

4.2 CrIS

4.2.1 Introduction

The Crosstrack Infrared Sounder (CrIS), shown in Figure 4.2-1, is a dynamically aligned Michelson interferometer covering 3 bands over a spectral range of 3.92 µm to 15.38 µm (650 cm-1 to 2550 cm-1). The 8-second cross-track scan is controlled by a step-and settle-positioning system with 30 earth scene positions centered about nadir.

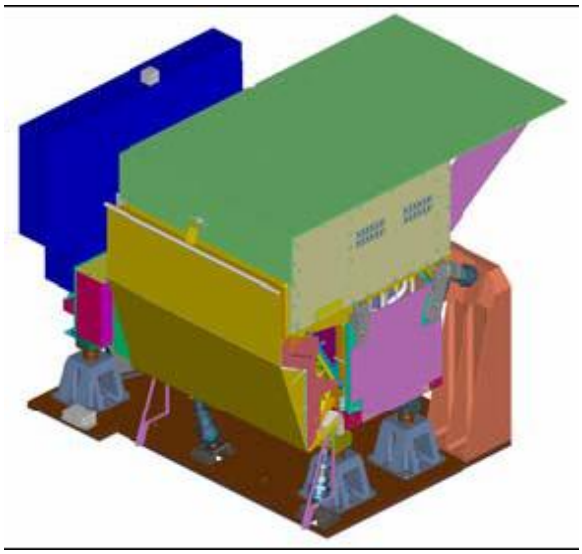

Figure 4.2-1. CrIS Drawing of the Instrument

Double-sided interferograms are collected from 9 fields of view (FOV) in a 3x3 array configuration at each position or field of regard (FOR) as shown in Figure 4.2-2.

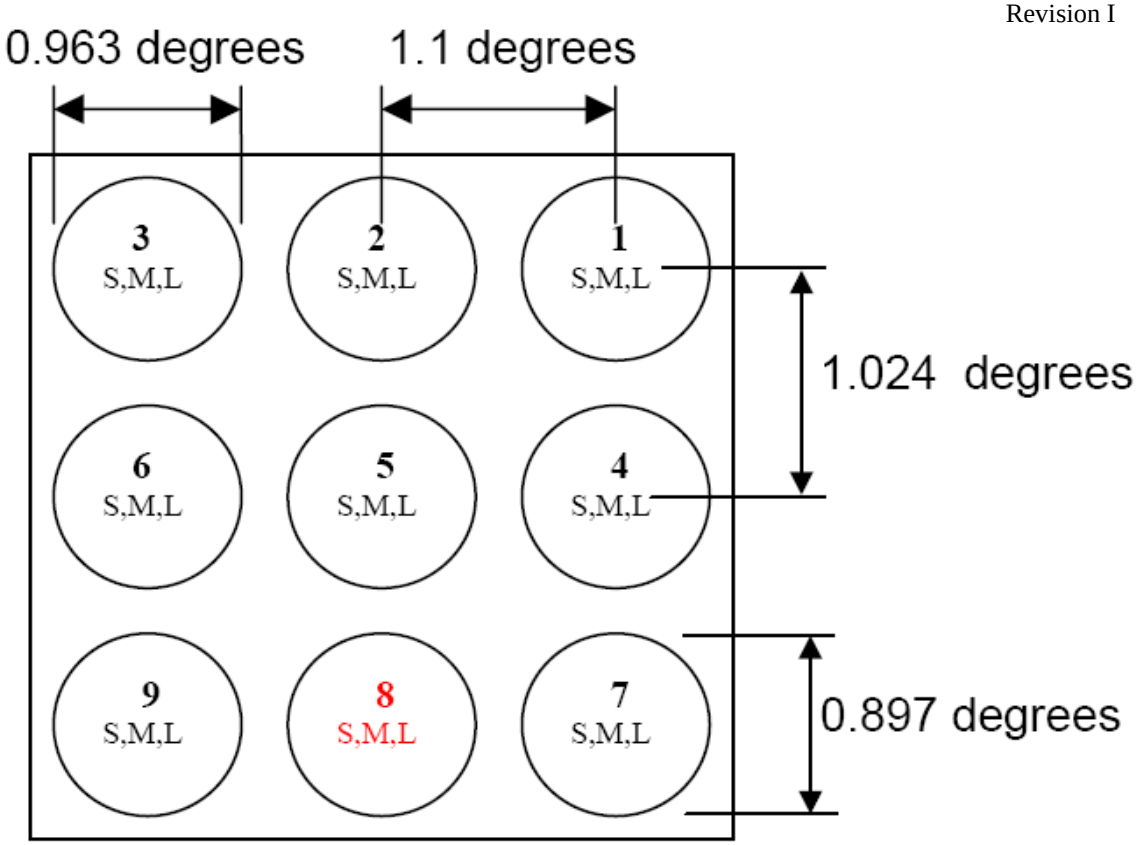

Figure 4.2-2. CrIS Field of Regard About Nadir and 9 Field of Views

(FOVs are depicted on the Earth; the anti-sun direction is to the left; the velocity direction is downward.)

The CrIS's mission is to collect upwelling infrared spectra at very high spectral resolution, and with excellent radiometric precision. This data is then merged with microwave data collected by the Advanced Technology Microwave Sounder (ATMS) to construct highly accurate temperature, moisture, and pressure profiles of the earth's atmosphere. Collectively, the CrIS and the ATMS sensors are referred to as the Crosstrack Infrared and Microwave Sounding Suite (CrIMSS).

The CrIS sensor system produces three key EDRs:

- Atmospheric Vertical Moisture Profiles
- Atmospheric Vertical Temperature Profiles
- Atmospheric Vertical Pressure Profiles

4.2.2 Instrument Function

Figure 4.2-3 shows an optical path of radiance through the CrIS modules. Figure 4.2-4 shows an exploded view of the CrIS modules. The optical bench module provides the structural anchor for telescope, interferometer (IM), aft optics, detector cooler, and detector preamplifier modules

Check the JPSS MIS Server at https://jpssmis.gsfc.nasa.gov/frontmenu_dsp.cfm to verify that this is the correct version prior to use.

(listed as the super module in Figure 4.2-4). The Scene Selection Module (SSM) contains the scan mirror, mirror baffle, bearings, cross-track and in-track scan motors and position sensors, scan electronics, earth radiators, and space radiators. The Internal Calibration Target (ICT), equipped with precision temperature sensors, emits a radiance standard for the calibration of the CrIS data measured by the CrIS once every eight second scan over the entire range of spectral bands. The Processing and Control Electronics (PCE) Module controls all sensor operations by processing Interferometer and SSM Commands and data, processing mission data (interferograms), collecting sensor health and status telemetry, controlling sensor temperatures, managing sensor power, and processing spacecraft commands and transmitting data.

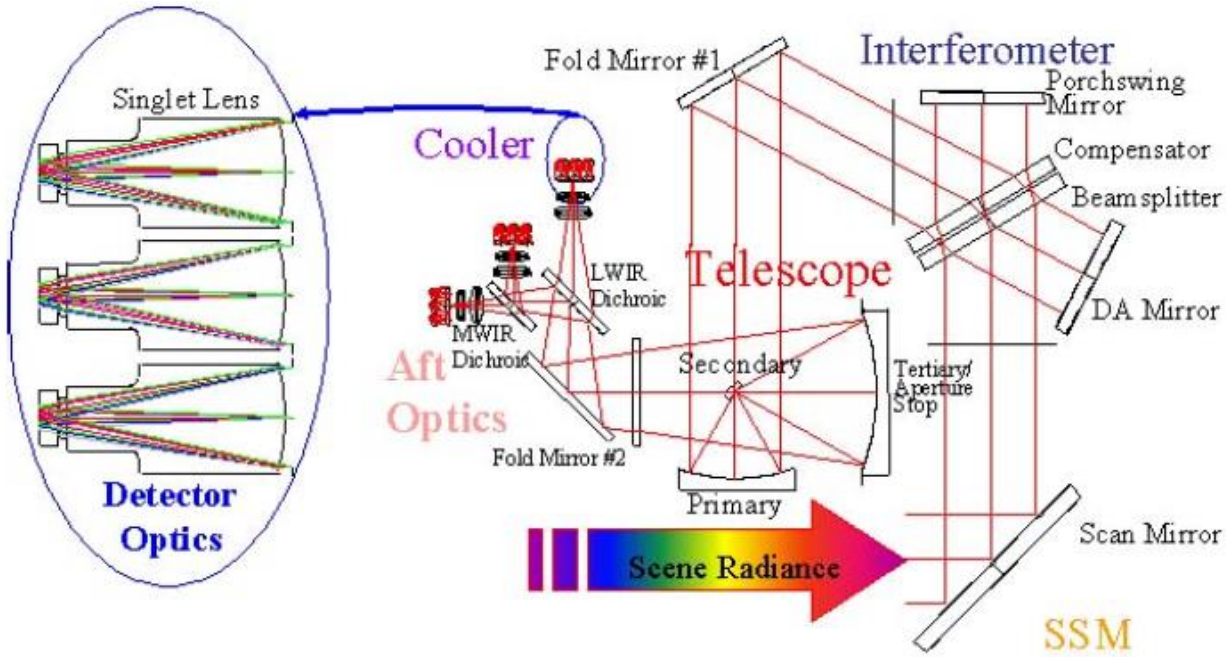

Figure 4.2-3. CrIS Signal Radiance Flow to Detectors

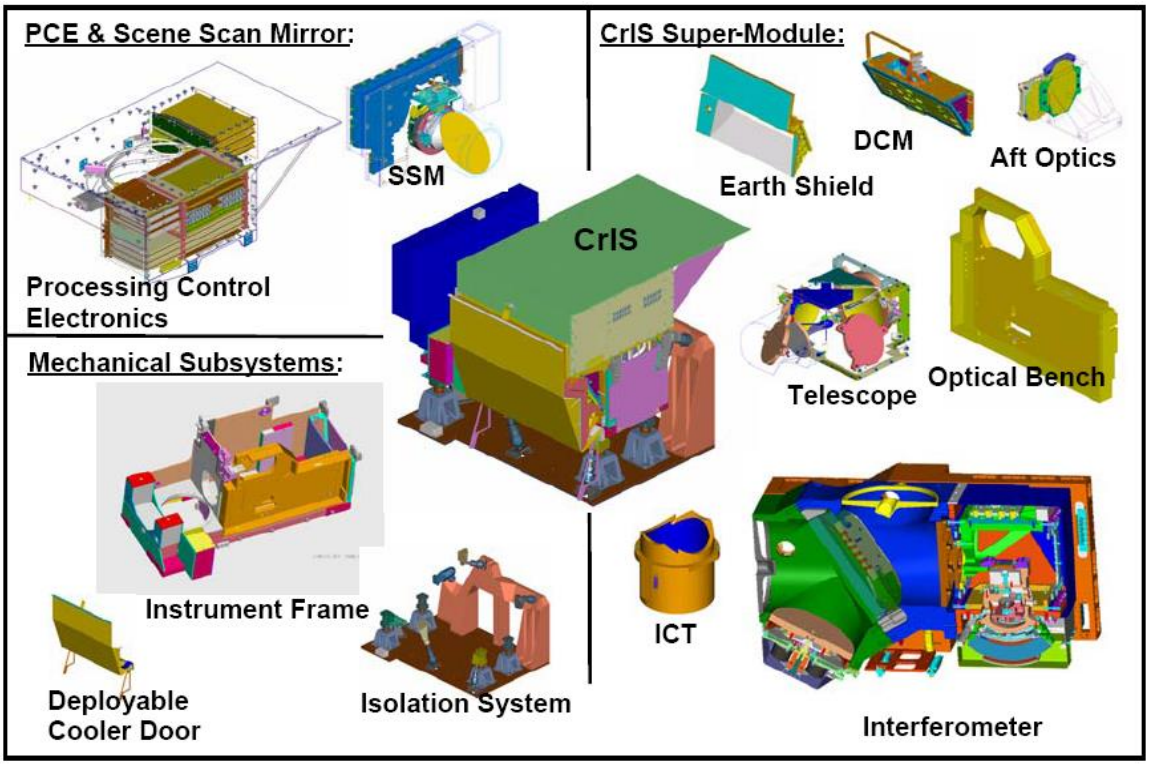

Figure 4.2-4. CrIS Modules (Exploded View)

The SSM directs Earth scene and calibration radiance into CrIS optical modules. Figure 4.2-5 shows the scene viewed by CrIS, which consists of 30 steps of 3.33 degrees each with 0.167-second dwell time reaching full ±48.3-degree scene coverage. The 3 x 3 array of 14 km diameter CrIS FOV undergoes a rotation during the cross-track scan and grows to maximum of 49 x 31 km ellipses as the scan progresses away from nadir. The SSM views the scene, space and internal calibration target every 8 seconds. The scan system also includes in-track velocity compensation.

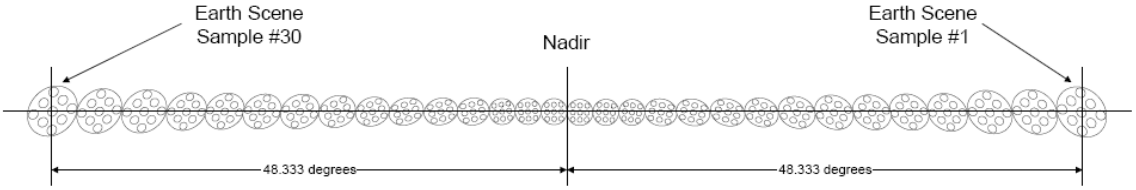

Figure 4.2-5. CrIS Scene View: 30 Steps per 8 Second Scan

After the SSM, incoming radiation passes through the Interferometer Module where it is modulated and passed to the Telescope Module. The Telescope Module delivers modulated radiation to the Aft Optics Module which divides the input into SWIR, MWIR, and LWIR bands with LWIR Dichroic and MWIR Dichroic beamsplitters. The spectral ranges, resolutions and maximum path differences (MPD) for the LWIR, MWIR, and SWIR are given in Table 4.2-1.

Table 4.2-1. CrIS Spectral Band Coverage and Resolution

Band	Spectral Range [cm^{-1}]	Spectral Range [μm^{-1}]	Band Width [cm^{-1}]	Resolution [cm^{-1}]	MPD [cm^{-1}]
LW	650-1095	15.4-9.1	445	0.625	0.8
MW	1210-1750	8.3-5.7	540	0.625	0.8
SW	2155-2550	4.6-3.9	395	0.625	0.8

The Interferometer Module (IM) consists of a Beamsplitter-Compensator Assembly, a Porchswing Assembly, and a Dynamic Alignment (DA) Assembly. The Porchswing Assembly drives the moving mirror to induce an optical path difference (OPD). The DA Assembly aligns the stationary or fixed mirror to compensate for the minimal tilt between the two arms (optical paths) of the interferometer. The IM provides the sampling metrology signal that is used to determine the OPD between the moving and fixed mirrors and the direction of the mirror movement.

The IM Electronics consist of two circuit card assemblies (CCA) which are the Zero Crossing and Telemetry CCA (ZC) and the Control Motor Driver CCA (CMD). The Zero Crossing and Telemetry CCA processes the Tx and Ty signals with modulation index analyzers for DA x and y controller thresholds. The Telemetry A/D and Multiplexer (MUX) provide telemetry measurements for motor currents, and metrology peak detect signals and temperature measurements of the ICT and OMA, using current sources for the reference resistors and the four-wire PRTs. The ICT four PRTs (temperature sensors) permit the determination of the ICT's viewed surface temperature and temperature uniformity. There is digital input interfacing for the porchswing ZPD and MPD limit switches. In addition, there is a 150V constant current controller for the Neon Calibration Lamp Driver.

The CMD CCA contains four servo controllers. Three controllers are for the interferometer mechanisms: Porchswing (PS), Dynamic Alignment X (DAx), and Dynamic Alignment y (DAy) which are all located in the OMA. The PS controller is optimized to control the PS velocity. The DA controllers are optimized to control IM cavity tilt. The fourth controller is used to control the temperature of the interferometer's laser diode. The temperature controller controls the laser diode (located in the OMA and part of the metrology subsystem) to a precise temperature. This is needed so that the laser diode does not drift in wavelength. The temperature controller loop contains a Thermal Electric Cooler (TEC) and driver.

The CMD CCA provides the PCE clock, timing, and serial command and telemetry interfaces. The clock generation function derives all of its necessary clocks from the PCE-generated 33MHz clock. The timing function synchronizes PS travel with the PCE-provided 400mS sync, generates and outputs a timing signal to the PCE to indicate proper synchronization for sampling IR data, and responds to the PCE-provided reset signal for proper start-up initialization. The serial command and telemetry function receives, parses and distributes PCE-generated commands, gathers telemetry data and arranges it in the proper protocol.

The CrIS PCE houses the Instrument Flight Computer (IFC), Housekeeping CCA, Signal Processing CCA's, FireWire Command & Data Bus interface, and the Power Supply Assembly.

Check the JPSS MIS Server at https://jpssmis.gsfc.nasa.gov/frontmenu_dsp.cfm to verify that this is the correct version prior to use.

The IFC exchanges command and data with the spacecraft over the 1394a serial interface bus and interfaces internally with the SSM and IM. In addition, the IFC controls the CrIS functions by communicating with the Housekeeping and Signal Processing CCAs and manages sensor power by switching power supplies and by providing all power supply converters with a common sync frequency.

The Signal Processing CCAs are comprised of three major subsystems. These are – the Preamp Electronics, the IR Signal Processing electronics and the FIR Filter electronics. Their purpose is to amplify, bandpass limit, digitize and process interferograms of scene radiance recorded by CrIS. Other detailed functions of include analog anti-alias filtering, impulse/noise detection/correction, digital Finite Impulse Response (FIR) filtering, decimation, ZPD location estimation, data quality flags generation, commandable analog IR gain control and key telemetry and commandable sampling electronics delay matching. There are three Signal Processing CCAs, one for each FPA of the three wavelength bands, i.e. SWIR, MWIR, and LWIR. Each FPA has 9 detectors producing 9 interferograms for each FOR. The interferogram processing is shown in Figure 4.2-6.

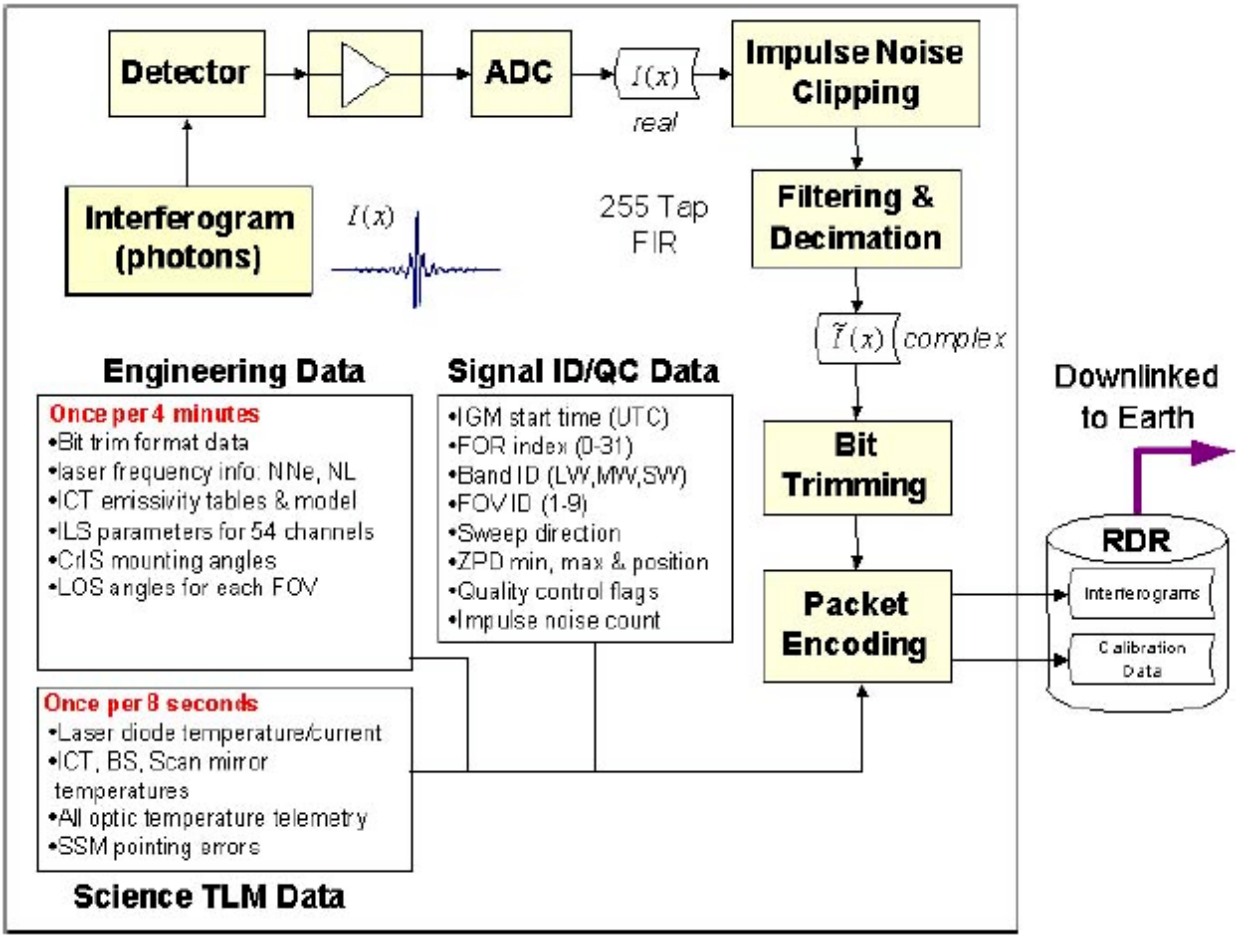

Figure 4.2-6. CrIS Functional Flow of Space Processing

The Structure Module consists of the primary sensor structure, the interface for mounting to the isolation module, the module interfaces, and the thermal control surfaces, heaters and electronics.

Check the JPSS MIS Server at https://jpssmis.gsfc.nasa.gov/frontmenu_dsp.cfm to verify that this is the correct version prior to use.

The Structure Module manages the loads and displacements induced by environmental inputs (vibration and thermal) to maintain the alignment of the optical sensitive components and to protect the detector cooler from contamination. The latter is accomplished by Deployable Cooler Cover, which is a retractable, metalized film cover. The Deployable Cooler Cover provides contamination protection for the Passive Radiant Cooler Module by blocking the view of the emitter to space during the sensor Outgas Mode. The Deployable Cooler Cover is then deployed after the outgas phase to expose the cooler to space. The cooler cover mounts directly to the CrIS sensor Structural Module. A pair of redundant limit switches is integrated into the cover mechanism to give positive indication of proper cover retraction and stowage. The door is controlled by the PCE.

4.2.3 Modes and Packet Structure

The CrIS functional modes are:

- OFF
- Survival
- Safe
- Diagnostic
- Operational
- Outgas

CrIS sensor operations are categorized into the six functional modes shown in Figure 4.2-7. These modes are not entirely unique. OFF and Survival modes share the common trait that the CrIS sensor provides no functionality. The reason is that power is not supplied to any of the functional components of the instrument in either mode but only to the survival and warm-up heaters when in Survival mode. In Safe and Outgas modes the CrIS sensor is only partially powered. As such these provide only limited functionality. In Operational and Diagnostic modes the full functionality of the CrIS sensor can be exercised. This requires that all subsystems be powered, which is not a requirement to be in Diagnostic mode. In the event that all subsystems are not powered then Diagnostic mode may bear a closer resemblance to Safe mode than to Operational. The Flight Software controls the instrument mode transitions.

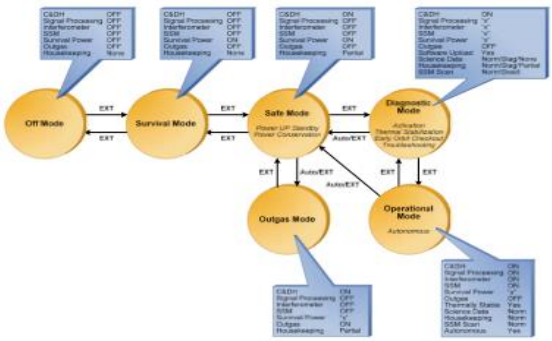

Figure 4.2-7. CrIS Modes and Mode Transitions

Within these modes the functions of activation and checkout for the CrIS sensor are supported. Activation refers to CrIS turn-on, and subsequent component warm up, or cool down, to

operating temperatures. Activation terminates when all Instrument modules (SSM, IM, SPs) have been fully powered and properly configured. This also includes ensuring that all temperatures, biases, and currents have stabilized within specified operational limits. For CrIS, this refers to a period of time, rather than a different state of the instrument. Activation also includes the opening of the Deployable Cooler Cover.

4.2.3.1 Off Mode

In the OFF Mode, the CrIS receives no external power for operation, including survival heater power. CrIS OFF mode is used for ground storage and transportation, launch, and spacecraft power crisis situations.

4.2.3.2 Survival Mode

Instrument operational power will be off but spacecraft will supply power to instrument survival or warm up heaters. In Survival Mode, the spacecraft is responsible for sampling critical instrument temperatures via the instrument passive analog temperature sensors. Normal instrument telemetry is not available with operational power off.

4.2.3.3 Safe Mode

The Safe Mode is an intermediate state between OFF/Survival mode and the other modes. In the Safe Mode the CrIS sensor is partially powered up and operating. Housekeeping telemetry, science/calibration telemetry and engineering packets are produced and transmitted in Safe Mode, however no science data is produced.

4.2.3.4 Diagnostic Mode

Diagnostic Mode capability is initiated by the ground or Spacecraft to operate CrIS in manner outside of the other standard modes. In the Diagnostic Mode, CrIS is capable of operation and supports the following:

1. Normal transition between the safe mode and the operational mode.
2. Early on-orbit checkout to verify the operability of the CrIS sensor. This is done via an ability to transmit raw undecimated interferograms, and to dwell on selected telemetry points so as to transmit data from these points at a high rate.
3. Support troubleshooting and/or instrument characterization.
4. Software uploads.
5. Starting at a single target location (i.e., Earth Scene, Deep Space or ICT)

To support early orbit checkout and anomaly resolution, CrIS can selectively disable any on-orbit processing operation that modifies (i.e. combines or compresses) raw data in any manner.

In the Diagnostic Mode, CrIS is capable of transmitting not only undecimated interferograms, but also may provide high data rate telemetry (Dwell Date) at a combined rate of 3200 samples per second. The definition of the Dwell Telemetry that can be transmitted in Diagnostic Mode can be found in Section 4.2.4.5.

CrIS accommodates the specified diagnostic mode by receipt of a command or series of commands that set up the desired diagnostic data output.

Check the JPSS MIS Server at https://jpssmis.gsfc.nasa.gov/frontmenu_dsp.cfm to verify that this is the correct version prior to use.

4.2.3.5 Operational Mode

When in the Operational Mode, the CrIS sensor is collecting mission and calibration data in its normal, continuous 8-second cross-track scan cycle. From Operational Mode, CrIS can transition to either Safe Mode or Diagnostic Mode. The transition to Safe Mode is done either by ground station command or autonomously by the flight software. The flight software will initiate a transition to Safe Mode when a critical fault is detected at which point it turns off the signal processors, Interferometer Module and Scene Select Module (after parking the SSM mirror at the ICT position).

CrIS is capable of remaining in normal Operational mode while the spacecraft performs orbit correction within the rates specified in the *National Polar-orbiting Operational Environmental Satellite System* (*NPOESS) Preparatory Project (NPP) Spacecraft to the Cross-Track Infrared Sounder (CrIS) Instrument Interface Control Document (ICD),* GSFC Document 429-03-05-02. The CrIS sensor is also capable of continued autonomous operation despite the occurrence of external CrIS synchronization errors. When a synchronization error occurs, it is reported in telemetry.

4.2.3.6 Outgas Mode

The Outgas Mode provides the function of purging contaminants from the CrIS sensor, by heating portions of the sensor to elevated temperatures. This mode is essentially the same as the instrument safe mode. No science data are collected while in this mode. The CrIS housekeeping, science/calibration and engineering packets are transmitted during this mode.

4.2.4 Mission Data

The CrIS generates mission data on an 8-second scan cycle. The 8-second scan is broken into forty 200 msec epochs beginning with the CrIS internal 8-second synchronization pulse which follows the CrIMSS pulse by 7.367 seconds. During proper synchronization, the pulse begins the slew (3 epochs) to the observation of the first of thirty Earth Scenes. After 30 epochs observing the Earth, the CrIS uses one epoch to slew to the Deep Space, two epochs to collect calibration interferograms of Deep Space, two epochs to slew to the ICT and two epochs collecting calibration inteferograms of the ICT. The CrIS scan sequence is shown in Figure 4.2-8, the Sync referenced in the figure is the CrIMSS Sync Pulse.

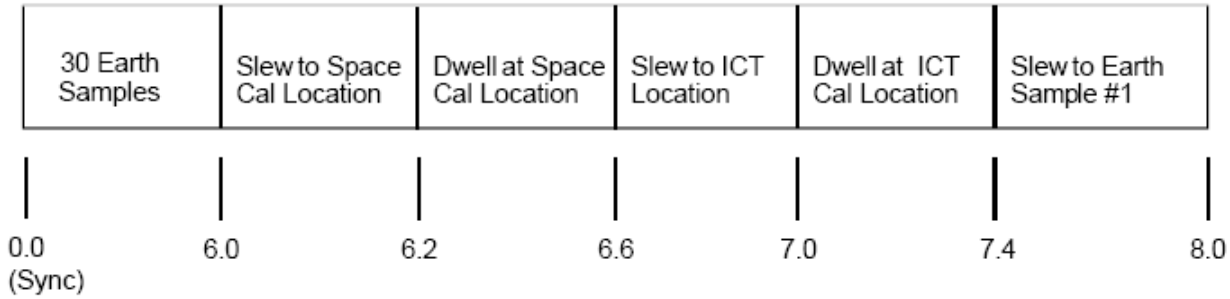

Figure 4.2-8. CrIS Normal Cross-track Scan Sequence (Timing in seconds)

All interferogram packets are formatted alike, though different APIDs contain Earth Scene, Deep Space, and ICT views. In Operational mode, the CrIS generates a set of 27 packets for each

Check the JPSS MIS Server at https://jpssmis.gsfc.nasa.gov/frontmenu_dsp.cfm to verify that this is the correct version prior to use.

observing epoch. In Diagnostic Mode, one of two data outputs are possible. In the first scenario, only 3 packets (one per band) instead of 27 are output for each observing epoch. The second scenario consists of the CrIS generating a set of 27 packets for each of the 34 observing epoch, but only of the APID type associated with the staring location (i.e. Earth Scene, Deep Space, or ICT). For interferogram packets, the UTC formatted timestamp in the secondary header (Table 4.1-3) indicates the time at the end of the interferogram sweep (+/- 1 msec). The time of the center of the Interferogram sweep can be determined by post-processing the UTC timestamp utilizing the timestamp bias parameter contained in the Engineering packet.

In addition to the interferogram packets, the CrIS outputs one Science Telemetry Packet per 8 second scan period, an Engineering packet every 4 minutes, 8 LEO&A and 8 housekeeping telemetry packets per 8 second scan period in Operational Mode. In Diagnostic Mode, CrIS generates Dwell packets every epoch (40 times per scan or every 200 msec) when requested. When a Memory Dump is requested, packets will come out every 200 msec until the total amount of data requested has been dumped (up to 40 times per scan). The NPP C&T Handbook describes the LEO&A and Housekeeping packet contents. For packets other than interferogram packets, the UTC formatted timestamp in the secondary header (Table 4.1-3) indicates the time the packet is generated.

Packet formats comply with the CCSDS Standards, as tailored for NPOESS use per the FT1394 System IRD. The CCSDS packet fields are in big-endian byte order.

4.2.4.1 Science Data

Table 4.2-2 lists all the X-band unique packets output by the CrIS.

Table 4.2-2. CrIS Mission Data Packet Types

VC ID	APID 10	Telemetry Packet Name	Data Rate (bps) by Mode				Downlink		Packet Size (octets) Truncated	Packet Size (octets) Full Spectral
			Operational Truncated	Diagnostic Truncated	Operational Full Spectral	Diagnostic Full Spectral (Note 4)	HRD	SMD		
0	1280	Instrument HK Telemetry Sub-Packet #1, Note 1	Note 1	Note 1			✓	✓	Note 1	
0	1281	Instrument HK Telemetry Sub-Packet #2, Note 1	Note 1	Note 1			✓	✓	Note 1	
0	1282	Instrument HK Telemetry Sub-Packet #3, Note 1	Note 1	Note 1			✓	✓	Note 1	
0	1283	Instrument HK Telemetry Sub-Packet #4, Note 1	Note 1	Note 1			✓	✓	Note 1	
0	1284	Instrument HK Telemetry Sub-Packet #5, Note 1	Note 1	Note 1			✓	✓	Note 1	

Check the JPSS MIS Server at https://jpssmis.gsfc.nasa.gov/frontmenu_dsp.cfm to verify that this is the correct version prior to use.

0	1285	Instrument HK Telemetry Sub-Packet #6, Note 1	Note 1	Note 1			✓	✓	Note 1	
0	1286	Instrument HK Telemetry Sub-Packet #7, Note 1	Note 1	Note 1			✓	✓	Note 1	
0	1287	Instrument HK Telemetry Sub-Packet #8, Note 1	Note 1	Note 1			✓	✓	Note 1	
0	1288	LEO&A, Note 1	Note 1	Note 1			✓	✓	Note 1	
6	1289	Eight Second Science/Calibration Telemetry Packet	560	560			✓	✓	560	
6	1290	Four Minute Engineering Telemetry Packet	257.7	257.7			✓	✓	7730	
21	1291	HK Telemetry Dwell Packet	---	39520				✓	988	
21	1292	SSM Telemetry Dwell Packet	---	46000				✓	1150	
21	1293	IM Telemetry Dwell Packet	---	46000				✓	1150	
8	1294	LW Diagnostic Interferogram Packet	---	1684240 (Note 2)		1699600 (Note 2) (Note 4)		✓	42106*	42490*
8	1295	MW Diagnostic Interferogram Packet	---	869520 (Note 2)		1704720 (Note 2) (Note 4)		✓	21738*	42618*
8	1296	SW Diagnostic Interferogram Packet	---	441680 (Note 2)		1702160 (Note 2) (Note 4)		✓	11042*	42554*
6	1315	LW 1 Earth Scene	726300***	---	731700***		✓	✓	2690**	2710**
6	1316	LW 2 Earth Scene	726300***	---	731700***		✓	✓	2690**	2710**
6	1317	LW 3 Earth Scene	726300***	---	731700***		✓	✓	2690**	2710**
7	1318	LW 4 Earth Scene	726300***	---	731700***		✓	✓	2690**	2710**
6	1319	LW 5 Earth Scene	726300***	---	731700***		✓	✓	2690**	2710**
6	1320	LW 6 Earth Scene	726300***	---	731700***		✓	✓	2690**	2710**
7	1320	LW 6 Earth Scene Note 3	726300***	---	731700***			✓	2690**	2710**
6	1321	LW 7 Earth Scene	726300***	---	731700***		✓	✓	2690**	2710**
6	1322	LW 8 Earth Scene	726300***	---	731700***		✓	✓	2690**	2710**
6	1323	LW 9 Earth Scene	726300***	---	731700***		✓	✓	2690**	2710**
6	1324	MW 1 Earth Scene	513540***	---	814860***		✓	✓	1902**	3018**
6	1325	MW 2 Earth Scene	513540***	---	814860***		✓	✓	1902**	3018**
6	1326	MW 3 Earth Scene	513540***	---	814860***		✓	✓	1902**	3018**
7	1327	MW 4 Earth Scene	513540***	---	814860***			✓	1902**	3018**
6	1328	MW 5 Earth Scene	513540***	---	814860***		✓	✓	1902**	3018**
6	1329	MW 6 Earth Scene	513540***	---	814860***		✓	✓	1902**	3018**
7	1329	MW 6 Earth Scene Note 3	513540***	---	814860***			✓	1902**	3018**
6	1330	MW 7 Earth Scene	513540***	---	814860***		✓	✓	1902**	3018**
6	1331	MW 8 Earth Scene	513540***	---	814860***		✓	✓	1902**	3018**
6	1332	MW 9 Earth Scene	513540***	---	814860***		✓	✓	1902**	3018**
6	1333	SW 1 Earth Scene	162540***	---	502740***		✓	✓	602**	1862**
6	1334	SW 2 Earth Scene	162540***	---	502740***		✓	✓	602**	1862**
6	1335	SW 3 Earth Scene	162540***	---	502740***		✓	✓	602**	1862**

7	1336	SW 4 Earth Scene	162540***	---	502740***			✓	602**	1862**
6	1337	SW 5 Earth Scene	162540***	---	502740***		✓	✓	602**	1862**
6	1338	SW 6 Earth Scene	162540***	---	502740***		✓	✓	602**	1862**
7	1338	SW 6 Earth Scene Note 3	162540***	---	502740***			✓	602**	1862**
6	1339	SW 7 Earth Scene	162540***	---	502740***		✓	✓	602**	1862**
6	1340	SW 8 Earth Scene	162540***	---	502740***		✓	✓	602**	1862**
6	1341	SW 9 Earth Scene	162540***	---	502740***		✓	✓	602**	1862**
6	1342	LW 1 Deep Space	48420***	---	48780***		✓	✓	2690**	2710**
6	1343	LW 2 Deep Space	48420***	---	48780***		✓	✓	2690**	2710**
6	1344	LW 3 Deep Space	48420***	---	48780***		✓	✓	2690**	2710**
7	1345	LW 4 Deep Space	48420***	---	48780***			✓	2690**	2710**
6	1346	LW 5 Deep Space	48420***	---	48780***		✓	✓	2690**	2710**
6	1347	LW 6 Deep Space	48420***	---	48780***		✓	✓	2690**	2710**
7	1347	LW 6 Deep Space Note 3	48420***	---	48780***			✓	2690**	2710**
6	1348	LW 7 Deep Space	48420***	---	48780***		✓	✓	2690**	2710**
6	1349	LW 8 Deep Space	48420***	---	48780***		✓	✓	2690**	2710**
6	1350	LW 9 Deep Space	48420***	---	48780***		✓	✓	2690**	2710**
6	1351	MW 1 Deep Space	34236***	---	54324***		✓	✓	1902**	3018**
6	1352	MW 2 Deep Space	34236***	---	54324***		✓	✓	1902**	3018**
6	1353	MW 3 Deep Space	34236***	---	54324***		✓	✓	1902**	3018**
7	1354	MW 4 Deep Space	34236***	---	54324***			✓	1902**	3018**
6	1355	MW 5 Deep Space	34236***	---	54324***		✓	✓	1902**	3018**
6	1356	MW 6 Deep Space	34236***	---	54324***		✓	✓	1902**	3018**
7	1356	MW 6 Deep Space Note 3	34236***	---	54324***			✓	1902**	3018**
6	1357	MW 7 Deep Space	34236***	---	54324***		✓	✓	1902**	3018**
6	1358	MW 8 Deep Space	34236***	---	54324***		✓	✓	1902**	3018**
6	1359	MW 9 Deep Space	34236***	---	54324***		✓	✓	1902**	3018**
6	1360	SW 1 Deep Space	10836***	---	33516***		✓	✓	602**	1862**
6	1361	SW 2 Deep Space	10836***	---	33516***		✓	✓	602**	1862**
6	1362	SW 3 Deep Space	10836***	---	33516***		✓	✓	602**	1862**
7	1363	SW 4 Deep Space	10836***	---	33516***			✓	602**	1862**
6	1364	SW 5 Deep Space	10836***	---	33516***		✓	✓	602**	1862**
6	1365	SW 6 Deep Space	10836***	---	33516***		✓	✓	602**	1862**
7	1365	SW 6 Deep Space Note 3	10836***	---	33516***			✓	602**	1862**
6	1366	SW 7 Deep Space	10836***	---	33516***		✓	✓	602**	1862**
6	1367	SW 8 Deep Space	10836***	---	33516***		✓	✓	602**	1862**
6	1368	SW 9 Deep Space	10836***	---	33516***		✓	✓	602**	1862**
6	1369	LW 1 Internal Calibration Target	48420***	---	48780***		✓	✓	2690**	2710**
6	1370	LW 2 Internal Calibration Target	48420***	---	48780***		✓	✓	2690**	2710**
6	1371	LW 3 Internal Calibration Target	48420***	---	48780***		✓	✓	2690**	2710**
7	1372	LW 4 Internal Calibration Target	48420***	---	48780***			✓	2690**	2710**
6	1373	LW 5 Internal Calibration Target	48420***	---	48780***		✓	✓	2690**	2710**
6	1374	LW 6 Internal Calibration Target	48420***	---	48780***		✓	✓	2690**	2710**
7	1374	LW 6 Internal Calibration Target Note 3	48420***	---	48780***			✓	2690**	2710**
6	1375	LW 7 Internal Calibration Target	48420***	---	48780***		✓	✓	2690**	2710**

6	1376	LW 8 Internal Calibration Target	48420***	---	48780***		✓	✓	2690**	2710**
6	1377	LW 9 Internal Calibration Target	48420***	---	48780***		✓	✓	2690**	2710**
6	1378	MW 1 Internal Calibration Target	34236***	---	54324***		✓	✓	1902**	3018**
6	1379	MW 2 Internal Calibration Target	34236***	---	54324***		✓	✓	1902**	3018**
6	1380	MW 3 Internal Calibration Target	34236***	---	54324***		✓	✓	1902**	3018**
7	1381	MW 4 Internal Calibration Target	34236***	---	54324***			✓	1902**	3018**
6	1382	MW 5 Internal Calibration Target	34236***	---	54324***		✓	✓	1902**	3018**
6	1383	MW 6 Internal Calibration Target	34236***	---	54324***		✓	✓	1902**	3018**
7	1383	MW 6 Internal Calibration Target Note 3	34236***	---	54324***			✓	1902**	3018**
6	1384	MW 7 Internal Calibration Target	34236***	---	54324***		✓	✓	1902**	3018**
6	1385	MW 8 Internal Calibration Target	34236***	---	54324***		✓	✓	1902**	3018**
6	1386	MW 9 Internal Calibration Target	34236***	---	54324***		✓	✓	1902**	3018**
6	1387	SW 1 Internal Calibration Target	10836***	---	33516***		✓	✓	602**	1862**
6	1388	SW 2 Internal Calibration Target	10836***	---	33516***		✓	✓	602**	1862**
6	1389	SW 3 Internal Calibration Target	10836***	---	33516***		✓	✓	602**	1862**
7	1390	SW 4 Internal Calibration Target	10836***	---	33516***			✓	602**	1862**
6	1391	SW 5 Internal Calibration Target	10836***	---	33516***		✓	✓	602**	1862**
6	1392	SW 6 Internal Calibration Target	10836***	---	33516***		✓	✓	602**	1862**
7	1392	SW 6 Internal Calibration Target Note 3	10836***	---	33516***			✓	602**	1862**
6	1393	SW 7 Internal Calibration Target	10836***	---	33516***		✓	✓	602**	1862**
6	1394	SW 8 Internal Calibration Target	10836***	---	33516***		✓	✓	602**	1862**
6	1395	SW 9 Internal Calibration Target	10836***	---	33516***		✓	✓	602**	1862**
21	1397	Memory Dump	---	variable				✓	Up to 32792	
8	1398	Test Packet, Note 1	---	256				✓	256	

1. Documented in the NPP Command and Telemetry Handbook
2. Data Rate for APIDs 1294-1296 assumes 40 packets per scan are output. It is possible for 34 packets per scan to be output. See Diagnostic Data section.
3. These duplicate rows show an alternate format to be used, at operations discretion, when HRD content is in danger of exceeding the 15Mbit/sec spacecraft limit
4. The CrIS instrument has an untested and unsupported Full Spectral Diagnostic mode of operation which is not documented in the CrIS ICD. Implementation will result in a CrIS data rate violation of approximately 2 times the current allocation and shall result in an oversubscription of the current HRD link and/or GS ingest

issues. An operational constraint is in place that requires reverting to truncated mode prior to implementing diagnostic mode.

* The maximum size of the diagnostic packets is 42618 octets.

** The maximum size of these packets is 4734 octets.

*** The data rates for APIDs 1315 through 1395 are listed as operational scan mode, 34 frame.

The CrIS outputs Earth Scene data in APIDs 1315 through 1341 thirty times (once per Earth Scene FOR) every 8 second scan when in Operational Mode. The 30 FORs are output at 200 msec intervals within the scan. The packets are configurable because the number of samples is fixed for each band and the size of each sample is configurable by command. The default sizes are below and the maximum sizes are included in the footnotes to Table 4.2-2.

Table 4.2-3. CrIS Operational Interferogram Samples by IR Band

IR Band	Post Processing Bits (for each I and Q)	Number of Samples (for each I and Q)	
		Truncated	Full Spectral
LW	18	866	874
MW	17	530	1052
SW	15	202	808

In Operational Mode, each IR band's interferogram samples a different number of complex numbers (see Table 4.2-3). The bit size of each sample after filtering and decimation but before bit trimming differs between bands. These data then pass through the programmable bit trimming process. The bit trimming for each band is divided into up to 16 zones, each with its unique bit trimmed sample length. The start and stop bit of the 40-bit filter response accumulator (defining the trimmed length) and the boundary of each zone is included in the Engineering Packet. Table 4.2-4 documents the default trimmed lengths for the default zones of the LW, MW and SW packets. The bits not used in the last 16-bit word of the I data block and Q data block are filled with zeros.

Figure 4.2-9 shows the format of all Interferogram Packets. The figure labels the packet length as variable because the fixed length packets are configurable and the nine APIDs associated with one IR band may be configured differently than nine APIDs of another IR Band. Table 4.2.5 lists the contents of the User Data field of the Interferogram Packet. The format of Table 4.2-5 remains the same but the mnemonic names will change depending on the apid. The Mnemonics for SW FOV 1 Earth Scene packets are depicted in table 4.2.5 as there are 27 different apids associated with the LW, MW, and SW band.

Table 4.2-4. CrIS Default Bit Trimming Output

	LW				MW				SW			
	Truncated	Full Spectral	Truncated	Full Spectral	Truncated	Full Spectral	Truncated	Full Spectral	Truncated	Full Spectral	Truncated	Full Spectral
	End Sample Index		Sample Bit Length		End Sample Index		Sample Bit Length		End Sample Index		Sample Bit Length	
Zone 1	50	54	11	11	134	116	13	10	42	94	10	8
Zone 2	91	95	13	13	209	316	14	11	77	149	10	9
Zone 3	375	379	12	12	315	509	17	12	125	243	15	8
Zone 4	421	425	13	13	390	543	14	17	161	324	10	9
Zone 5	445	449	18	18	530	736	13	12	202	379	10	10
Zone 6	491	495	13	13		936		11		429		15
Zone 7	775	779	12	12		1052		10		484		10
Zone 8	816	820	13	13						565		9
Zone 9	866	874	11	11						659		8
Zone 10										714		9
Zone 11										808		8
	LW Truncated		LW Full Spectral		MW Truncated		MW Full Spectral		SW Truncated		SW Full Spectral	
Total Interferogram Bits	10610 x 2 = 21220		10698 x 2 = 21396		7464 x 2 = 14928		11930 x 2 = 23860		2260 x 2 = 4520		7306 x 2 = 14612	
Total Interferogram Bytes (after zero fill)	1327 x 2 = 2654		1338 x 2 = 2676		934 x 2 = 1868		1492 x 2 = 2984		284 x 2 = 568		914 x 2 = 1828	
Total Packet Bytes, including header	2654 + 14 + 20 = 2688		2676 + 14 + 20 = 2710		1868 + 14 + 20 = 1902		2984 + 14 + 20 = 3018		568 + 14 + 20 = 602		1828 + 14 + 20 = 1862	

Check the JPSS MIS Server at https://jpssmis.gsfc.nasa.gov/frontmenu_dsp.cfm to verify that this is the correct version prior to use.

CrIS Interferogram Packet **VERSION B** **DATE**

	PACKET PRIMARY HEADER							SECONDARY HEADER	User Data Field												
	Verson No.	Packet Identification			Packet Sequence		Packet Length		CrIS Interferogram Header										Interferogram		
		Type Indicator	Sec Hdr Flag	APID	Sequence Flags	Sequence Count		Start of Scan	PCE App FSW Version	Instrument ID	Scan Information	Scan Status Flags	Impulse Noise Count	ZPD Amplitude	ZPD Location	Number of Convert Pulses	Filter Status Upper Register	Filter Status Lower Register	Number of I Words after Bit Trimming	Detector I Data	Detector Q Data	TOTAL
Bits	3	1	1	11	2	14	16	64	11	5	16	16	16	16	16	16	16	16	16	varies	varies	varies
Octets	2				2		2	8	2		2	2	2	2	2	2	2	2	2	varies	varies	varies
Value	000	0	1	varies	11	varies	varies	varies	varies	varies	varies	varies	varies	varies	varies	varies	varies	varies	varies	varies	varies	

Telemetry Packet

Secondary Header Present

Figure 4.2-9. CrIS Interferogram Packet Format

Check the JPSS MIS Server at https://jpssmis.gsfc.nasa.gov/frontmenu_dsp.cfm to verify that this is the correct version prior to use.

Table 4.2-5. CrIS Interferometer Packet User Data Fields

Start Bit	Bit Size	Mnemonic Name	Description	Units or State Value	Conversion Coefficients (formula or C5,C4,C3,C2,C1,C0) or State Name	Data Type
0	11	INF_SW1ES_PCEAppFSWVer	PCE Application FSW Version	N/A	N/A	U
11	5	INF_SW1ES_InstrumentID	Instrument ID	N/A	N/A	U
16	6	INF_SW1ES_ScanInfo(Field of Regard)	Scan Info(Field of Regard)	0 1-30 31 32 33	ICT Earth Scene # Deep Space UnknownFOR Nadir	U
22	2	INF_SW1ES_ScanInfo(Sweep Dir)	Scan Info(Sweep Direction)	0 1 2 3	Forward Reverse Unknown Unknown	U
24	2	INF_SW1ES_ScanInfo(Spare)	Scan Info(Spare)	N/A	N/A	U
26	1	INF_SW1ES_ScanInfo(End of PCI Sys Mem reached w/o end of dat ID)	Scan Info(End of PCI Sys Mem w/o EOD ID)	0 1	False True	U
27	1	INF_SW1ES_ScanInfo(I and Q Cnt Stat)	Scan Info(I and Q Count Status)	0 1	IQ Match IQ Not Match	U
28	4	INF_SW1ES_ScanInfo(Num Padded Zeros Added)	Scan Info(Number of Padded Zeros Added)	N/A	N/A	U
32	1	INF_SW1ES_ScanStatFlg(Invld Interferogram Dat Exceed ZPD Sat Limit)	Scan Stat Flg(Invld IGM Dat-ZPD Sat Lmt)	0 1	Valid Invalid	U
33	1	INF_SW1ES_ScanStatFlg(I Dat Bit Trim Failure)	Scan Stat Flg(I Data Bit Trim Fail)	0 1	False True	U
34	1	INF_SW1ES_ScanStatFlg(Q Dat Bit Trim Failure)	Scan Stat Flg(Q Data Bit Trim Fail)	0 1	False True	U
35	1	INF_SW1ES_ScanStatFlg(Fringe Cnt Err-Smple Pulse Err)	Scan Stat Flg(FCE(Sample Pulse Num Err))	0 1	False True	U
36	1	INF_SW1ES_ScanStatFlg(Spare1)	Scan Stat Flg(Spare)	N/A	N/A	U
37	1	INF_SW1ES_ScanStatFlg(I Coef Tbl mem Err)	Scan Stat Flg(I Coef Table Mem Err)	0 1	False True	U
38	1	INF_SW1ES_ScanStatFlg(Q Coef Tbl Mem Err)	Scan Stat Flg(Q Coef Table Mem Err)	0 1	False True	U
39	1	INF_SW1ES_ScanStatFlg(Bit Trim Tbl Mem Err)	Scan Stat Flg(Bit Trim Tbl Mem Err)	0 1	False True	U
40	1	INF_SW1ES_ScanStatFlg(Impulse Tbl Mem Err)	Scan Stat Flg(Impulse Tbl Mem Err))	0 1	False True	U
41	7	INF_SW1ES_ScanStatFlg(Spare2)	Scan Stat Flg(Spare)	N/A	N/A	U

Check the JPSS MIS Server at https://jpssmis.gsfc.nasa.gov/frontmenu_dsp.cfm to verify that this is the correct version prior to use.

Start Bit	Bit Size	Mnemonic Name	Description	Units or State Value	Conversion Coefficients (formula or C5,C4,C3,C2,C1,C0) or State Name	Data Type
48	6	INF_SW1ES_ImpulseNoiseCnt(Spare)	Impulse Noise Count(Spare)	N/A	N/A	U
54	10	INF_SW1ES_ImpulseNoiseCnt(Number Impulses Detected)	Number of impulses detected	N/A	N/A	U
64	6	INF_SW1ES_ZPDAmpChan(Spare)	ZPD Amplitude(Spare)	N/A	N/A	U
70	10	INF_SW1ES_ZPDAmpChan(ZPD Amp)	ZPD Amp (Bits 4-13 of the A/D Converter)	N/A	-, -, -, -, 16, 0	S
80	16	INF_SW1ES_ZPDLocChan(ZPD Location)	ZPD Location	N/A	N/A	S
96	16	INF_SW1ES_NumConvPulses(Total Num of Interfer Conv Pulses rcv	Num Interferometer Convert Pulses Recv	0 1	N/A	U
112	3	INF_SW1ES_FilterStatUpperrReg(FIR Revision Reg)	Fltr Stat Up Reg(FIR Revision Reg)	N/A	N/A	U
115	1	INF_SW1ES_FilterStatUpperReg(System Processor Last Bank Filled)	Filter Status Upper Reg.(System Processor Last Bank Filled)	0 1	Bank 1 Bank 2	
116	1	INF_SW1ES_FilterStatUpperReg(Reserved)	Filter Status Upper Reg.(Reserved)	N/A	N/A	
117	5	INF_SW1ES_FilterStatUpperReg(Diag Mode Chan Sel)	Filter Status Upper Reg.(Diag Mode Chan. Select)	24 25 26 27 20 21 22 23 12 13-15 All Others	Channel 1 Channel 2 Channel 3 Channel 4 Channel 5 Channel 6 Channel 7 Channel 8 Channel 9 Not Used Invalid	U
122	1	INF_SW1ES_FilterStatUpperReg(Diag Mode En/Disable)	Filter Status Upper Reg.(Diag Mode Enable/Disable)	0 1	Disabled Enabled	U
123	1	INF_SW1ES_FilterStatUpperReg(Byte Swap Mode)	INF_SW1ES_FilterStatUpperReg(Byte Swap Mode)	0 1	Disabled Enabled	U
124	1	INF_SW1ES_FilterStatUpperReg(Num of Sample Pulse Err)	Filter Status Upper Reg.(Number Sample Pulse Error)	0 1	No Error Error	U
125	1	INF_SW1ES_FilterStatUpperReg(Coef Set 2 Checksum Err)	Filter Status Upper Reg.(Coef Set 2 Checksum Error)	0 1	No Error Error	U
126	1	INF_SW1ES_FilterStatUpperReg(Coef Set 1 Checksum Err)	Filter Status Upper Reg.(Coef Set 1 Checksum Error)	0 1	No Error Error	U
127	1	INF_SW1ES_FilterStatUpperReg(Impuse Mask Err)	Filter Status Upper Reg.(Impuse Mask Error)	0 1	No Error Error	U
128	5	INF_SW1ES_FilterStatLowerReg(Not Used1)	Filter Status Lower Reg.(Not Used1)	N/A	N/A	U

Check the JPSS MIS Server at https://jpssmis.gsfc.nasa.gov/frontmenu_dsp.cfm to verify that this is the correct version prior to use.

Start Bit	Bit Size	Mnemonic Name	Description	Units or State Value	Conversion Coefficients (formula or C5,C4,C3,C2,C1,C0) or State Name	Data Type
133	1	INF_SW1ES_FilterStatLowerReg(Num Output Filter Smpl err)	Filter Status Lower Reg.(Number Output Filter Smpl Error)	0 1	False True	U
134	1	INF_SW1ES_FilterStatLowerReg(Not Used2)	Filter Status Lower Reg.(Not Used2)	N/A	N/A	U
135	1	INF_SW1ES_FilterStatLowerReg(Busy TO AD#9)	Filter Status Lower Reg.(Busy TO AD#9)	0 1	No Timeout Timeout	U
136	1	INF_SW1ES_FilterStatLowerReg(Busy TO AD#8)	Filter Status Lower Reg.(Busy TO AD#8)	0 1	No Timeout Timeout	U
137	1	INF_SW1ES_FilterStatLowerReg(Busy TO AD#7)	Filter Status Lower Reg.(Busy TO AD#7)	0 1	No Timeout Timeout	U
138	1	INF_SW1ES_FilterStatLowerReg(Busy TO AD#6)	Filter Status Lower Reg.(Busy TO AD#6)	0 1	No Timeout Timeout	U
139	1	INF_SW1ES_FilterStatLowerReg(Busy TO AD#5)	Filter Status Lower Reg.(Busy TO AD#5)	0 1	No Timeout Timeout	U
140	1	INF_SW1ES_FilterStatLowerReg(Busy TO AD#4)	Filter Status Lower Reg.(Busy TO AD#4)	0 1	No Timeout Timeout	U
141	1	INF_SW1ES_FilterStatLowerReg(Busy TO AD#3)	Filter Status Lower Reg.(Busy TO AD#3)	0 1	No Timeout Timeout	U
142	1	INF_SW1ES_FilterStatLowerReg(Busy TO AD#2)	Filter Status Lower Reg.(Busy TO AD#2)	0 1	No Timeout Timeout	U
143	1	INF_SW1ES_FilterStatLowerReg(Busy TO AD#1)	Filter Status Lower Reg.(Busy TO AD#1)	0 1	No Timeout Timeout	U
144	16	INF_SW1ES_NumIDatWrdAftrBitTrim(Total Num of I Wrds After Bit Trim)	Number of I Words After Bit Trimming	N/A	N/A	U
160	varies	INF_SW1ES_DetectorData	Detector Data -- Bit Trimmed Interferogram Data (I) 1st word	N/A	N/A	U
varies	varies	INF_SW1ES_DetectorData	Detector Data -- Bit Trimmed Interferogram Data (I) Last word	N/A	N/A	U
varies	varies	INF_SW1ES_DetectorData	Detector Data -- Bit Trimmed Interferogram Data (Q) 1st word	N/A	N/A	U
varies	varies	INF_SW1ES_DetectorData	Detector Data -- Bit Trimmed Interferogram Data (Q) Last word	N/A	N/A	U

Check the JPSS MIS Server at https://jpssmis.gsfc.nasa.gov/frontmenu_dsp.cfm to verify that this is the correct version prior to use.

4.2.4.2 Calibration Data

The CrIS outputs Deep Space view data in APIDs 1342 through 1368 and Internal Calibration Target view data in APIDs 1369 to 1395. The SSM spends two epochs at each location so each of the APIDs above is generated twice every 8 second scan when in Operational Mode. The packet format and user data fields for these APIDs are identical to the Science Data APIDs.

The CrIS also outputs one Science/Calibration Telemetry Packet in APID 1289 every 8 second scan period. This packet contains Calibration Resistor temperatures and ICT temperatures measured during all 40 epochs of the scan. Servo pointing errors are available when the SSM points to the 30 earth FORs. Additional fields are added to the first epoch observing the ICT. The packet has a fixed length of 560 octets.

Figure 4.2-10 shows the format of APID 1289. Table 4.2-6 lists the contents of the User Data field of the Science/Calibration Telemetry Packet. Note that conversion coefficients exist for many of the Science/Calibration mnemonics.

CrIS Eight Second Science Telemetry Packet VERSION H DATE

	PACKET PRIMARY HEADER							SECONDARY	User Data Field																		
	Verson No.	Packet Identification			Packet Sequence		Packet Length	Time Stamp			Epoch 1 Info					Epoch 2	Epoch 3	Epoch 4 Info									
		APID Type	Sec Hdr Flag	APID	Sequence Flags	Sequence Count			PCE App FSW Version	Instrument ID	IE CCA Cal Resistor Temp (epoch 1)	Low Range Cal Resistor (epoch 1)	High Range Cal Resistor (epoch 1)	ICT Temp #1 (epoch 1)	ICT Temp #2 (epoch 1)	Resistor and ICT Temps*	Resistor and ICT Temps*	IE CCA Cal Resistor Temp (epoch 4)	Low Range Cal Resistor (epoch 4)	High Range Cal Resistor (epoch 4)	ICT Temp #1 (epoch 4)	ICT Temp #2 (epoch 4)	Cross-Track Servo Error (sample 21, epoch 4)	In-Track Servo Error (sample 21, epoch 4)	subtotal	TOTAL
Bits	3	1	1	11	2	14	16	64	11	5	16	16	16	16	16	80	80	16	16	16	16	16	16	16	480	4480
Octets	2				2		2	8	2		2	2	2	2	2	10	10	2	2	2	2	2	2	2	60	560
Value	000	0	1	0x509	11	varies	0x022A	varies	varies	varies	varies	varies	varies	varies	varies	varies	varies	zeros	varies	varies	varies	varies	varies	varies		

Telemetry Packet

Secondary Header Present

	User Data Field																							
	Epoch 5	Epoch 6 to 33 Info	Epoch 34 to 38	Epoch 39																			Epoch 40	
	Resistor and ICT Temps, Servo Errors**	Resistor and ICT Temps, Servo Errors**	Resistor and ICT Temps only*	Laser Diode Current	IE CCA Cal Resistor Temp (epoch 39)	Low Range Cal Resistor (epoch 39)	High Range Cal Resistor (epoch 39)	ICT Temp #1 (epoch 39)	ICT Temp #2 (epoch 39)	Laser Diode Temp (epoch 39)	Beamsplitter Temp #1 (epoch 39)	OMA Structure Input Temp #1 (epoch 39)	OMA Structure Input Temp #2 (epoch 39)	SSM Scan Mirror Temp (epoch 39)	SSM Scan Mirror Baffle Temp (epoch 39)	Stage 2 Cooler Temp (epoch 39)	Stage 4 Cooler Temp (epoch 39)	Stage 1 Cooler Temp (epoch 39)	Stage 3 Cooler Temp (epoch 39)	Telescope Temp #1 (epoch 39)	Resistor and ICT Temps only (epoch 40)*	subtotal
	112	3136	400	16	16	16	16	16	16	16	16	16	16	16	16	16	16	16	16	16	80	4000
	14	392	50	2	2	2	2	2	2	2	2	2	2	2	2	2	2	2	2	2	10	500
	varies	varies	varies	varies	varies	varies	varies	varies	varies	varies	varies	varies	varies	varies	varies	varies	varies	varies	varies	varies	varies	

* Fields for these epochs are identical to Epoch 1
** Fields for these epochs are identical to Epoch 4

Figure 4.2-10. CrIS Science/Calibration Telemetry Packet Format

Table 4.2-6. CrIS Science/Calibration Telemetry Packet User Data Fields

Start Bit	Bit Size	Mnemonic Name	EU TYPE	Side 1 Conversion Coefficients	Side 2 Conversion Coefficients	Data Type
0	11	8Sec_SciCalib_PCEAppFSWVer	N/A	N/A	N/A	U
11	5	8Sec_SciCalib_InstrumentID	N/A	N/A	N/A	U
16	2	8Sec_SciCalib_IECCACalibResistorTemp(epoch1 - Spare)	N/A	N/A	N/A	U
18	14	8Sec_SciCalib_IECCACalibResistorTemp(epoch1)	Polynomial	-, -, 0, 0, 0.0062985, 21.052	-, -, 0, 0, 0.00632057, 22.89	S
32	2	8Sec_SciCalib_LowRangeCalibResistor(epoch1 - Spare)	N/A	N/A	N/A	U
34	14	8Sec_SciCalib_LowRangeCalibResistor(epoch1)	Polynomial	-, -, 0, 0, 0.00632450851228198, 23.6157147848609	-, -, 0, 0, 0.0062993081297153, 23.9436702010479	S
48	2	8Sec_SciCalib_HighRangeCalibResistor(epoch1 - Spare)	N/A	N/A	N/A	U
50	14	8Sec_SciCalib_HighRangeCalibResistor(epoch1)	Polynomial	-, -, 0, 0, 0.00632450851228198, 23.6157147848609	-, -, 0, 0, 0.0062993081297153, 23.9436702010479	S
64	2	8Sec_SciCalib_ICTTemp#1(epoch1 - Spare)	N/A	N/A	N/A	U
66	14	8Sec_SciCalib_ICTTemp#1(epoch1)	Polynomial	-, -, 0, 0, 0.00629693, 21.475	-, -, 0, 0, 0.00631454, 23.618	S
80	2	8Sec_SciCalib_ICTTemp#2(epoch1 - Spare)	N/A	N/A	N/A	U
82	14	8Sec_SciCalib_ICTTemp#2(epoch1)	Polynomial	-, -, 0, 0, 0.00631254, 22.144	-, -, 0, 0, 0.00631525, 23.481	S
96	2	8Sec_SciCalib_IECCACalibResistorTemp(epoch2 - Spare)	N/A	N/A	N/A	U
98	14	8Sec_SciCalib_IECCACalibResistorTemp(epoch2)	Polynomial	-, -, 0, 0, 0.0062985, 21.052	-, -, 0, 0, 0.00632057, 22.89	S
112	2	8Sec_SciCalib_LowRangeCalibResistor(epoch2 - Spare)	N/A	N/A	N/A	U
114	14	8Sec_SciCalib_LowRangeCalibResistor(epoch2)	Polynomial	-, -, 0, 0, 0.00632450851228198, 23.6157147848609	-, -, 0, 0, 0.0062993081297153, 23.9436702010479	S
128	2	8Sec_SciCalib_HighRangeCalibResistor(epoch2 - Spare)	N/A	N/A	N/A	U
130	14	8Sec_SciCalib_HighRangeCalibResistor(epoch2)	Polynomial	-, -, 0, 0, 0.00632450851228198, 23.6157147848609	-, -, 0, 0, 0.0062993081297153, 23.9436702010479	S
144	2	8Sec_SciCalib_ICTTemp#1(epoch2 - Spare)	N/A	N/A	N/A	U
146	14	8Sec_SciCalib_ICTTemp#1(epoch2)	Polynomial	-, -, 0, 0, 0.00629693, 21.475	-, -, 0, 0, 0.00631454, 23.618	S

Check the JPSS MIS Server at https://jpssmis.gsfc.nasa.gov/frontmenu_dsp.cfm to verify that this is the correct version prior to use.

Start Bit	Bit Size	Mnemonic Name	EU TYPE	Side 1 Conversion Coefficients	Side 2 Conversion Coefficients	Data Type
160	2	8Sec_SciCalib_ICTTemp#2(epoch2 - Spare)	N/A	N/A	N/A	U
162	14	8Sec_SciCalib_ICTTemp#2(epoch2)	Polynomial	-, -, 0, 0, 0.00631254, 22.144	-, -, 0, 0, 0.00631525, 23.481	S
176	2	8Sec_SciCalib_IECCACalibResistorTemp(epoch3 - Spare)	N/A	N/A	N/A	U
178	14	8Sec_SciCalib_IECCACalibResistorTemp(epoch3)	Polynomial	-, -, 0, 0, 0.0062985, 21.052	-, -, 0, 0, 0.00632057, 22.89	S
192	2	8Sec_SciCalib_LowRangeCalibResistor(epoch3 - Spare)	N/A	N/A	N/A	U
194	14	8Sec_SciCalib_LowRangeCalibResistor(epoch3)	Polynomial	-, -, 0, 0, 0.00632450851228198, 23.6157147848609	-, -, 0, 0, 0.0062993081297153, 23.9436702010479	S
208	2	8Sec_SciCalib_HighRangeCalibResistor(epoch3 - Spare)	N/A	N/A	N/A	U
210	14	8Sec_SciCalib_HighRangeCalibResistor(epoch3)	Polynomial	-, -, 0, 0, 0.00632450851228198, 23.6157147848609	-, -, 0, 0, 0.0062993081297153, 23.9436702010479	S
224	2	8Sec_SciCalib_ICTTemp#1(epoch3 - Spare)	N/A	N/A	N/A	U
226	14	8Sec_SciCalib_ICTTemp#1(epoch3)	Polynomial	-, -, 0, 0, 0.00629693, 21.475	-, -, 0, 0, 0.00631454, 23.618	S
240	2	8Sec_SciCalib_ICTTemp#2(epoch3 - Spare)	N/A	N/A	N/A	U
242	14	8Sec_SciCalib_ICTTemp#2(epoch3)	Polynomial	-, -, 0, 0, 0.00631254, 22.144	-, -, 0, 0, 0.00631525, 23.481	S
256	2	8Sec_SciCalib_IECCACalibResistorTemp(epoch4 - Spare)	N/A	N/A	N/A	U
258	14	8Sec_SciCalib_IECCACalibResistorTemp(epoch4)	Polynomial	-, -, 0, 0, 0.0062985, 21.052	-, -, 0, 0, 0.00632057, 22.89	S
272	2	8Sec_SciCalib_LowRangeCalibResistor(epoch4 - Spare)	N/A	N/A	N/A	U
274	14	8Sec_SciCalib_LowRangeCalibResistor(epoch4)	Polynomial	-, -, 0, 0, 0.00632450851228198, 23.6157147848609	-, -, 0, 0, 0.0062993081297153, 23.9436702010479	S
288	2	8Sec_SciCalib_HighRangeCalibResistor(epoch4 - Spare)	N/A	N/A	N/A	U
290	14	8Sec_SciCalib_HighRangeCalibResistor(epoch4)	Polynomial	-, -, 0, 0, 0.00632450851228198, 23.6157147848609	-, -, 0, 0, 0.0062993081297153, 23.9436702010479	S
304	2	8Sec_SciCalib_ICTTemp#1(epoch4 - Spare)	N/A	N/A	N/A	U
306	14	8Sec_SciCalib_ICTTemp#1(epoch4)	Polynomial	-, -, 0, 0, 0.00629693, 21.475	-, -, 0, 0, 0.00631454, 23.618	S
320	2	8Sec_SciCalib_ICTTemp#2(epoch4 - Spare)	N/A	N/A	N/A	U
322	14	8Sec_SciCalib_ICTTemp#2(epoch4)	Polynomial	-, -, 0, 0, 0.00631254, 22.144	-, -, 0, 0, 0.00631525, 23.481	S
336	16	8Sec_SciCalib_CrossTrkServoErr(sample 21 epoch 4)	Polynomial	-, -, 0, 0, 2.996, 0	-, -, 0, 0, 2.996, 0	S
352	16	8Sec_SciCalib_InTrkServoErr(sample 21 epoch 4)	Polynomial	-, -, 0, 0, 0.5645, 0	-, -, 0, 0, 0.5653, 0	S
368	2	8Sec_SciCalib_IECCACalibResistorTemp(epoch5 - Spare)	N/A	N/A	N/A	U
370	14	8Sec_SciCalib_IECCACalibResistorTemp(epoch5)	Polynomial	-, -, 0, 0, 0.0062985, 21.052	-, -, 0, 0, 0.00632057, 22.89	S
384	2	8Sec_SciCalib_LowRangeCalibResistor(epoch5 - Spare)	N/A	N/A	N/A	U

386	14	8Sec_SciCalib_LowRangeCalibResistor(epoch5)	Polynomial	-, -, 0, 0, 0.00632450851228198, 23.6157147848609	-, -, 0, 0, 0.0062993081297153, 23.9436702010479	S
400	2	8Sec_SciCalib_HighRangeCalibResistor(epoch5 - Spare)	N/A	N/A	N/A	U
402	14	8Sec_SciCalib_HighRangeCalibResistor(epoch5)	Polynomial	-, -, 0, 0, 0.00632450851228198, 23.6157147848609	-, -, 0, 0, 0.0062993081297153, 23.9436702010479	S
416	2	8Sec_SciCalib_ICTTemp#1(epoch5 - Spare)	N/A	N/A	N/A	U
418	14	8Sec_SciCalib_ICTTemp#1(epoch5)	Polynomial	-, -, 0, 0, 0.00629693, 21.475	-, -, 0, 0, 0.00631454, 23.618	S
432	2	8Sec_SciCalib_ICTTemp#2(epoch5 - Spare)	N/A	N/A	N/A	U
434	14	8Sec_SciCalib_ICTTemp#2(epoch5)	Polynomial	-, -, 0, 0, 0.00631254, 22.144	-, -, 0, 0, 0.00631525, 23.481	S
448	16	8Sec_SciCalib_CrossTrkServoErr(sample 21 epoch 5)	Polynomial	-, -, 0, 0, 2.996, 0	-, -, 0, 0, 2.996, 0	S
464	16	8Sec_SciCalib_InTrkServoErr(sample 21 epoch 5)	Polynomial	-, -, 0, 0, 0.5645, 0	-, -, 0, 0, 0.5653, 0	S
480	2	8Sec_SciCalib_IECCACalibResistorTemp(epoch6 - Spare)	N/A	N/A	N/A	U
482	14	8Sec_SciCalib_IECCACalibResistorTemp(epoch6)	Polynomial	-, -, 0, 0, 0.0062985, 21.052	-, -, 0, 0, 0.00632057, 22.89	S
496	2	8Sec_SciCalib_LowRangeCalibResistor(epoch6 - Spare)	N/A	N/A	N/A	U
498	14	8Sec_SciCalib_LowRangeCalibResistor(epoch6)	Polynomial	-, -, 0, 0, 0.00632450851228198, 23.6157147848609	-, -, 0, 0, 0.0062993081297153, 23.9436702010479	S
512	2	8Sec_SciCalib_HighRangeCalibResistor(epoch6 - Spare)	N/A	N/A	N/A	U
514	14	8Sec_SciCalib_HighRangeCalibResistor(epoch6)	Polynomial	-, -, 0, 0, 0.00632450851228198, 23.6157147848609	-, -, 0, 0, 0.0062993081297153, 23.9436702010479	S
528	2	8Sec_SciCalib_ICTTemp#1(epoch6 - Spare)	N/A	N/A	N/A	U
530	14	8Sec_SciCalib_ICTTemp#1(epoch6)	Polynomial	-, -, 0, 0, 0.00629693, 21.475	-, -, 0, 0, 0.00631454, 23.618	S
544	2	8Sec_SciCalib_ICTTemp#2(epoch6 - Spare)	N/A	N/A	N/A	U
546	14	8Sec_SciCalib_ICTTemp#2(epoch6)	Polynomial	-, -, 0, 0, 0.00631254, 22.144	-, -, 0, 0, 0.00631525, 23.481	S
560	16	8Sec_SciCalib_CrossTrkServoErr(sample 21 epoch 6)	Polynomial	-, -, 0, 0, 2.996, 0	-, -, 0, 0, 2.996, 0	S
576	16	8Sec_SciCalib_InTrkServoErr(sample 21 epoch 6)	Polynomial	-, -, 0, 0, 0.5645, 0	-, -, 0, 0, 0.5653, 0	S
592	2	8Sec_SciCalib_IECCACalibResistorTemp(epoch7 - Spare)	N/A	N/A	N/A	U
594	14	8Sec_SciCalib_IECCACalibResistorTemp(epoch7)	Polynomial	-, -, 0, 0, 0.0062985, 21.052	-, -, 0, 0, 0.00632057, 22.89	S
608	2	8Sec_SciCalib_LowRangeCalibResistor(epoch7 - Spare)	N/A	N/A	N/A	U
610	14	8Sec_SciCalib_LowRangeCalibResistor(epoch7)	Polynomial	-, -, 0, 0, 0.00632450851228198, 23.6157147848609	-, -, 0, 0, 0.0062993081297153, 23.9436702010479	S
624	2	8Sec_SciCalib_HighRangeCalibResistor(epoch7 - Spare)	N/A	N/A	N/A	U
626	14	8Sec_SciCalib_HighRangeCalibResistor(epoch7)	Polynomial	-, -, 0, 0, 0.00632450851228198, 23.6157147848609	-, -, 0, 0, 0.0062993081297153, 23.9436702010479	S
640	2	8Sec_SciCalib_ICTTemp#1(epoch7 - Spare)	N/A	N/A	N/A	U
642	14	8Sec_SciCalib_ICTTemp#1(epoch7)	Polynomial	-, -, 0, 0, 0.00629693, 21.475	-, -, 0, 0, 0.00631454, 23.618	S
656	2	8Sec_SciCalib_ICTTemp#2(epoch7 - Spare)	N/A	N/A	N/A	U
658	14	8Sec_SciCalib_ICTTemp#2(epoch7)	Polynomial	-, -, 0, 0, 0.00631254, 22.144	-, -, 0, 0, 0.00631525, 23.481	S
672	16	8Sec_SciCalib_CrossTrkServoErr(sample 21 epoch 7)	Polynomial	-, -, 0, 0, 2.996, 0	-, -, 0, 0, 2.996, 0	S
688	16	8Sec_SciCalib_InTrkServoErr(sample 21 epoch 7)	Polynomial	-, -, 0, 0, 0.5645, 0	-, -, 0, 0, 0.5653, 0	S
704	2	8Sec_SciCalib_IECCACalibResistorTemp(epoch8 - Spare)	N/A	N/A	N/A	U
706	14	8Sec_SciCalib_IECCACalibResistorTemp(epoch8)	Polynomial	-, -, 0, 0, 0.0062985, 21.052	-, -, 0, 0, 0.00632057, 22.89	S
720	2	8Sec_SciCalib_LowRangeCalibResistor(epoch8 - Spare)	N/A	N/A	N/A	U
722	14	8Sec_SciCalib_LowRangeCalibResistor(epoch8)	Polynomial	-, -, 0, 0, 0.00632450851228198, 23.6157147848609	-, -, 0, 0, 0.0062993081297153, 23.9436702010479	S
736	2	8Sec_SciCalib_HighRangeCalibResistor(epoch8 - Spare)	N/A	N/A	N/A	U
738	14	8Sec_SciCalib_HighRangeCalibResistor(epoch8)	Polynomial	-, -, 0, 0, 0.00632450851228198, 23.6157147848609	-, -, 0, 0, 0.0062993081297153, 23.9436702010479	S
752	2	8Sec_SciCalib_ICTTemp#1(epoch8 - Spare)	N/A	N/A	N/A	U
754	14	8Sec_SciCalib_ICTTemp#1(epoch8)	Polynomial	-, -, 0, 0, 0.00629693, 21.475	-, -, 0, 0, 0.00631454, 23.618	S
768	2	8Sec_SciCalib_ICTTemp#2(epoch8 - Spare)	N/A	N/A	N/A	U
770	14	8Sec_SciCalib_ICTTemp#2(epoch8)	Polynomial	-, -, 0, 0, 0.00631254, 22.144	-, -, 0, 0, 0.00631525, 23.481	S
784	16	8Sec_SciCalib_CrossTrkServoErr(sample 21 epoch 8)	Polynomial	-, -, 0, 0, 2.996, 0	-, -, 0, 0, 2.996, 0	S
800	16	8Sec_SciCalib_InTrkServoErr(sample 21 epoch 8)	Polynomial	-, -, 0, 0, 0.5645, 0	-, -, 0, 0, 0.5653, 0	S
816	2	8Sec_SciCalib_IECCACalibResistorTemp(epoch9 - Spare)	N/A	N/A	N/A	U
818	14	8Sec_SciCalib_IECCACalibResistorTemp(epoch9)	Polynomial	-, -, 0, 0, 0.0062985, 21.052	-, -, 0, 0, 0.00632057, 22.89	S
832	2	8Sec_SciCalib_LowRangeCalibResistor(epoch9 - Spare)	N/A	N/A	N/A	U
834	14	8Sec_SciCalib_LowRangeCalibResistor(epoch9)	Polynomial	-, -, 0, 0, 0.00632450851228198, 23.6157147848609	-, -, 0, 0, 0.0062993081297153, 23.9436702010479	S

848	2	8Sec_SciCalib_HighRangeCalibResistor(epoch9 - Spare)	N/A	N/A	N/A	U
850	14	8Sec_SciCalib_HighRangeCalibResistor(epoch9)	Polynomial	-, -, 0, 0, 0.00632450851228198, 23.6157147848609	-, -, 0, 0, 0.0062993081297153, 23.9436702010479	S
864	2	8Sec_SciCalib_ICTTemp#1(epoch9 - Spare)	N/A	N/A	N/A	U
866	14	8Sec_SciCalib_ICTTemp#1(epoch9)	Polynomial	-, -, 0, 0, 0.00629693, 21.475	-, -, 0, 0, 0.00631454, 23.618	S
880	2	8Sec_SciCalib_ICTTemp#2(epoch9 - Spare)	N/A	N/A	N/A	U
882	14	8Sec_SciCalib_ICTTemp#2(epoch9)	Polynomial	-, -, 0, 0, 0.00631254, 22.144	-, -, 0, 0, 0.00631525, 23.481	S
896	16	8Sec_SciCalib_CrossTrkServoErr(sample 21 epoch 9)	Polynomial	-, -, 0, 0, 2.996, 0	-, -, 0, 0, 2.996, 0	S
912	16	8Sec_SciCalib_InTrkServoErr(sample 21 epoch 9)	Polynomial	-, -, 0, 0, 0.5645, 0	-, -, 0, 0, 0.5653, 0	S
928	2	8Sec_SciCalib_IECCACalibResistorTemp(epoch10 - Spare)	N/A	N/A	N/A	U
930	14	8Sec_SciCalib_IECCACalibResistorTemp(epoch10)	Polynomial	-, -, 0, 0, 0.0062985, 21.052	-, -, 0, 0, 0.00632057, 22.89	S
944	2	8Sec_SciCalib_LowRangeCalibResistor(epoch10 - Spare)	N/A	N/A	N/A	U
946	14	8Sec_SciCalib_LowRangeCalibResistor(epoch10)	Polynomial	-, -, 0, 0, 0.00632450851228198, 23.6157147848609	-, -, 0, 0, 0.0062993081297153, 23.9436702010479	S
960	2	8Sec_SciCalib_HighRangeCalibResistor(epoch10 - Spare)	N/A	N/A	N/A	U
962	14	8Sec_SciCalib_HighRangeCalibResistor(epoch10)	Polynomial	-, -, 0, 0, 0.00632450851228198, 23.6157147848609	-, -, 0, 0, 0.0062993081297153, 23.9436702010479	S
976	2	8Sec_SciCalib_ICTTemp#1(epoch10 - Spare)	N/A	N/A	N/A	U
978	14	8Sec_SciCalib_ICTTemp#1(epoch10)	Polynomial	-, -, 0, 0, 0.00629693, 21.475	-, -, 0, 0, 0.00631454, 23.618	S
992	2	8Sec_SciCalib_ICTTemp#2(epoch10 - Spare)	N/A	N/A	N/A	U
994	14	8Sec_SciCalib_ICTTemp#2(epoch10)	Polynomial	-, -, 0, 0, 0.00631254, 22.144	-, -, 0, 0, 0.00631525, 23.481	S
1008	16	8Sec_SciCalib_CrossTrkServoErr(sample 21 epoch 10)	Polynomial	-, -, 0, 0, 2.996, 0	-, -, 0, 0, 2.996, 0	S
1024	16	8Sec_SciCalib_InTrkServoErr(sample 21 epoch 10)	Polynomial	-, -, 0, 0, 0.5645, 0	-, -, 0, 0, 0.5653, 0	S
1040	2	8Sec_SciCalib_IECCACalibResistorTemp(epoch11 - Spare)	N/A	N/A	N/A	U
1042	14	8Sec_SciCalib_IECCACalibResistorTemp(epoch11)	Polynomial	-, -, 0, 0, 0.0062985, 21.052	-, -, 0, 0, 0.00632057, 22.89	S
1056	2	8Sec_SciCalib_LowRangeCalibResistor(epoch11 - Spare)	N/A	N/A	N/A	U
1058	14	8Sec_SciCalib_LowRangeCalibResistor(epoch11)	Polynomial	-, -, 0, 0, 0.00632450851228198, 23.6157147848609	-, -, 0, 0, 0.0062993081297153, 23.9436702010479	S
1072	2	8Sec_SciCalib_HighRangeCalibResistor(epoch11 - Spare)	N/A	N/A	N/A	U
1074	14	8Sec_SciCalib_HighRangeCalibResistor(epoch11)	Polynomial	-, -, 0, 0, 0.00632450851228198, 23.6157147848609	-, -, 0, 0, 0.0062993081297153, 23.9436702010479	S
1088	2	8Sec_SciCalib_ICTTemp#1(epoch11 - Spare)	N/A	N/A	N/A	U
1090	14	8Sec_SciCalib_ICTTemp#1(epoch11)	Polynomial	-, -, 0, 0, 0.00629693, 21.475	-, -, 0, 0, 0.00631454, 23.618	S
1104	2	8Sec_SciCalib_ICTTemp#2(epoch11 - Spare)	N/A	N/A	N/A	U
1106	14	8Sec_SciCalib_ICTTemp#2(epoch11)	Polynomial	-, -, 0, 0, 0.00631254, 22.144	-, -, 0, 0, 0.00631525, 23.481	S
1120	16	8Sec_SciCalib_CrossTrkServoErr(sample 21 epoch 11)	Polynomial	-, -, 0, 0, 2.996, 0	-, -, 0, 0, 2.996, 0	S
1136	16	8Sec_SciCalib_InTrkServoErr(sample 21 epoch 11)	Polynomial	-, -, 0, 0, 0.5645, 0	-, -, 0, 0, 0.5653, 0	S
1152	2	8Sec_SciCalib_IECCACalibResistorTemp(epoch12 - Spare)	N/A	N/A	N/A	U
1154	14	8Sec_SciCalib_IECCACalibResistorTemp(epoch12)	Polynomial	-, -, 0, 0, 0.0062985, 21.052	-, -, 0, 0, 0.00632057, 22.89	S
1168	2	8Sec_SciCalib_LowRangeCalibResistor(epoch12 - Spare)	N/A	N/A	N/A	U
1170	14	8Sec_SciCalib_LowRangeCalibResistor(epoch12)	Polynomial	-, -, 0, 0, 0.00632450851228198, 23.6157147848609	-, -, 0, 0, 0.0062993081297153, 23.9436702010479	S
1184	2	8Sec_SciCalib_HighRangeCalibResistor(epoch12 - Spare)	N/A	N/A	N/A	U
1186	14	8Sec_SciCalib_HighRangeCalibResistor(epoch12)	Polynomial	-, -, 0, 0, 0.00632450851228198, 23.6157147848609	-, -, 0, 0, 0.0062993081297153, 23.9436702010479	S
1200	2	8Sec_SciCalib_ICTTemp#1(epoch12 - Spare)	N/A	N/A	N/A	U
1202	14	8Sec_SciCalib_ICTTemp#1(epoch12)	Polynomial	-, -, 0, 0, 0.00629693, 21.475	-, -, 0, 0, 0.00631454, 23.618	S
1216	2	8Sec_SciCalib_ICTTemp#2(epoch12 - Spare)	N/A	N/A	N/A	U
1218	14	8Sec_SciCalib_ICTTemp#2(epoch12)	Polynomial	-, -, 0, 0, 0.00631254, 22.144	-, -, 0, 0, 0.00631525, 23.481	S
1232	16	8Sec_SciCalib_CrossTrkServoErr(sample 21 epoch 12)	Polynomial	-, -, 0, 0, 2.996, 0	-, -, 0, 0, 2.996, 0	S
1248	16	8Sec_SciCalib_InTrkServoErr(sample 21 epoch 12)	Polynomial	-, -, 0, 0, 0.5645, 0	-, -, 0, 0, 0.5653, 0	S
1264	2	8Sec_SciCalib_IECCACalibResistorTemp(epoch13 - Spare)	N/A	N/A	N/A	U
1266	14	8Sec_SciCalib_IECCACalibResistorTemp(epoch13)	Polynomial	-, -, 0, 0, 0.0062985, 21.052	-, -, 0, 0, 0.00632057, 22.89	S
1280	2	8Sec_SciCalib_LowRangeCalibResistor(epoch13 - Spare)	N/A	N/A	N/A	U
1282	14	8Sec_SciCalib_LowRangeCalibResistor(epoch13)	Polynomial	-, -, 0, 0, 0.00632450851228198, 23.6157147848609	-, -, 0, 0, 0.0062993081297153, 23.9436702010479	S

1296	2	8Sec_SciCalib_HighRangeCalibResistor(epoch13 - Spare)	N/A	N/A	N/A	U
1298	14	8Sec_SciCalib_HighRangeCalibResistor(epoch13)	Polynomial	-, -, 0, 0, 0.00632450851228198, 23.6157147848609	-, -, 0, 0, 0.0062993081297153, 23.9436702010479	S
1312	2	8Sec_SciCalib_ICTTemp#1(epoch13 - Spare)	N/A	N/A	N/A	U
1314	14	8Sec_SciCalib_ICTTemp#1(epoch13)	Polynomial	-, -, 0, 0, 0.00629693, 21.475	-, -, 0, 0, 0.00631454, 23.618	S
1328	2	8Sec_SciCalib_ICTTemp#2(epoch13 - Spare)	N/A	N/A	N/A	U
1330	14	8Sec_SciCalib_ICTTemp#2(epoch13)	Polynomial	-, -, 0, 0, 0.00631254, 22.144	-, -, 0, 0, 0.00631525, 23.481	S
1344	16	8Sec_SciCalib_CrossTrkServoErr(sample 21 epoch 13)	Polynomial	-, -, 0, 0, 2.996, 0	-, -, 0, 0, 2.996, 0	S
1360	16	8Sec_SciCalib_InTrkServoErr(sample 21 epoch 13)	Polynomial	-, -, 0, 0, 0.5645, 0	-, -, 0, 0, 0.5653, 0	S
1376	2	8Sec_SciCalib_IECCACalibResistorTemp(epoch14 - Spare)	N/A	N/A	N/A	U
1378	14	8Sec_SciCalib_IECCACalibResistorTemp(epoch14)	Polynomial	-, -, 0, 0, 0.0062985, 21.052	-, -, 0, 0, 0.00632057, 22.89	S
1392	2	8Sec_SciCalib_LowRangeCalibResistor(epoch14 - Spare)	N/A	N/A	N/A	U
1394	14	8Sec_SciCalib_LowRangeCalibResistor(epoch14)	Polynomial	-, -, 0, 0, 0.00632450851228198, 23.6157147848609	-, -, 0, 0, 0.0062993081297153, 23.9436702010479	S
1408	2	8Sec_SciCalib_HighRangeCalibResistor(epoch14 - Spare)	N/A	N/A	N/A	U
1410	14	8Sec_SciCalib_HighRangeCalibResistor(epoch14)	Polynomial	-, -, 0, 0, 0.00632450851228198, 23.6157147848609	-, -, 0, 0, 0.0062993081297153, 23.9436702010479	S
1424	2	8Sec_SciCalib_ICTTemp#1(epoch14 - Spare)	N/A	N/A	N/A	U
1426	14	8Sec_SciCalib_ICTTemp#1(epoch14)	Polynomial	-, -, 0, 0, 0.00629693, 21.475	-, -, 0, 0, 0.00631454, 23.618	S
1440	2	8Sec_SciCalib_ICTTemp#2(epoch14 - Spare)	N/A	N/A	N/A	U
1442	14	8Sec_SciCalib_ICTTemp#2(epoch14)	Polynomial	-, -, 0, 0, 0.00631254, 22.144	-, -, 0, 0, 0.00631525, 23.481	S
1456	16	8Sec_SciCalib_CrossTrkServoErr(sample 21 epoch 14)	Polynomial	-, -, 0, 0, 2.996, 0	-, -, 0, 0, 2.996, 0	S
1472	16	8Sec_SciCalib_InTrkServoErr(sample 21 epoch 14)	Polynomial	-, -, 0, 0, 0.5645, 0	-, -, 0, 0, 0.5653, 0	S
1488	2	8Sec_SciCalib_IECCACalibResistorTemp(epoch15 - Spare)	N/A	N/A	N/A	U
1490	14	8Sec_SciCalib_IECCACalibResistorTemp(epoch15)	Polynomial	-, -, 0, 0, 0.0062985, 21.052	-, -, 0, 0, 0.00632057, 22.89	S
1504	2	8Sec_SciCalib_LowRangeCalibResistor(epoch15 - Spare)	N/A	N/A	N/A	U
1506	14	8Sec_SciCalib_LowRangeCalibResistor(epoch15)	Polynomial	-, -, 0, 0, 0.00632450851228198, 23.6157147848609	-, -, 0, 0, 0.0062993081297153, 23.9436702010479	S
1520	2	8Sec_SciCalib_HighRangeCalibResistor(epoch15 - Spare)	N/A	N/A	N/A	U
1522	14	8Sec_SciCalib_HighRangeCalibResistor(epoch15)	Polynomial	-, -, 0, 0, 0.00632450851228198, 23.6157147848609	-, -, 0, 0, 0.0062993081297153, 23.9436702010479	S
1536	2	8Sec_SciCalib_ICTTemp#1(epoch15 - Spare)	N/A	N/A	N/A	U
1538	14	8Sec_SciCalib_ICTTemp#1(epoch15)	Polynomial	-, -, 0, 0, 0.00629693, 21.475	-, -, 0, 0, 0.00631454, 23.618	S
1552	2	8Sec_SciCalib_ICTTemp#2(epoch15 - Spare)	N/A	N/A	N/A	U
1554	14	8Sec_SciCalib_ICTTemp#2(epoch15)	Polynomial	-, -, 0, 0, 0.00631254, 22.144	-, -, 0, 0, 0.00631525, 23.481	S
1568	16	8Sec_SciCalib_CrossTrkServoErr(sample 21 epoch 15)	Polynomial	-, -, 0, 0, 2.996, 0	-, -, 0, 0, 2.996, 0	S
1584	16	8Sec_SciCalib_InTrkServoErr(sample 21 epoch 15)	Polynomial	-, -, 0, 0, 0.5645, 0	-, -, 0, 0, 0.5653, 0	S
1600	2	8Sec_SciCalib_IECCACalibResistorTemp(epoch16 - Spare)	N/A	N/A	N/A	U
1602	14	8Sec_SciCalib_IECCACalibResistorTemp(epoch16)	Polynomial	-, -, 0, 0, 0.0062985, 21.052	-, -, 0, 0, 0.00632057, 22.89	S
1616	2	8Sec_SciCalib_LowRangeCalibResistor(epoch16 - Spare)	N/A	N/A	N/A	U
1618	14	8Sec_SciCalib_LowRangeCalibResistor(epoch16)	Polynomial	-, -, 0, 0, 0.00632450851228198, 23.6157147848609	-, -, 0, 0, 0.0062993081297153, 23.9436702010479	S
1632	2	8Sec_SciCalib_HighRangeCalibResistor(epoch16 - Spare)	N/A	N/A	N/A	U
1634	14	8Sec_SciCalib_HighRangeCalibResistor(epoch16)	Polynomial	-, -, 0, 0, 0.00632450851228198, 23.6157147848609	-, -, 0, 0, 0.0062993081297153, 23.9436702010479	S
1648	2	8Sec_SciCalib_ICTTemp#1(epoch16 - Spare)	N/A	N/A	N/A	U
1650	14	8Sec_SciCalib_ICTTemp#1(epoch16)	Polynomial	-, -, 0, 0, 0.00629693, 21.475	-, -, 0, 0, 0.00631454, 23.618	S
1664	2	8Sec_SciCalib_ICTTemp#2(epoch16 - Spare)	N/A	N/A	N/A	U
1666	14	8Sec_SciCalib_ICTTemp#2(epoch16)	Polynomial	-, -, 0, 0, 0.00631254, 22.144	-, -, 0, 0, 0.00631525, 23.481	S
1680	16	8Sec_SciCalib_CrossTrkServoErr(sample 21 epoch 16)	Polynomial	-, -, 0, 0, 2.996, 0	-, -, 0, 0, 2.996, 0	S
1696	16	8Sec_SciCalib_InTrkServoErr(sample 21 epoch 16)	Polynomial	-, -, 0, 0, 0.5645, 0	-, -, 0, 0, 0.5653, 0	S
1712	2	8Sec_SciCalib_IECCACalibResistorTemp(epoch17 - Spare)	N/A	N/A	N/A	U
1714	14	8Sec_SciCalib_IECCACalibResistorTemp(epoch17)	Polynomial	-, -, 0, 0, 0.0062985, 21.052	-, -, 0, 0, 0.00632057, 22.89	S
1728	2	8Sec_SciCalib_LowRangeCalibResistor(epoch17 - Spare)	N/A	N/A	N/A	U
1730	14	8Sec_SciCalib_LowRangeCalibResistor(epoch17)	Polynomial	-, -, 0, 0, 0.00632450851228198, 23.6157147848609	-, -, 0, 0, 0.0062993081297153, 23.9436702010479	S

1744	2	8Sec_SciCalib_HighRangeCalibResistor(epoch17 - Spare)	N/A	N/A	N/A	U
1746	14	8Sec_SciCalib_HighRangeCalibResistor(epoch17)	Polynomial	-, -, 0, 0, 0.00632450851228198, 23.6157147848609	-, -, 0, 0, 0.0062993081297153, 23.9436702010479	S
1760	2	8Sec_SciCalib_ICTTemp#1(epoch17 - Spare)	N/A	N/A	N/A	U
1762	14	8Sec_SciCalib_ICTTemp#1(epoch17)	Polynomial	-, -, 0, 0, 0.00629693, 21.475	-, -, 0, 0, 0.00631454, 23.618	S
1776	2	8Sec_SciCalib_ICTTemp#2(epoch17 - Spare)	N/A	N/A	N/A	U
1778	14	8Sec_SciCalib_ICTTemp#2(epoch17)	Polynomial	-, -, 0, 0, 0.00631254, 22.144	-, -, 0, 0, 0.00631525, 23.481	S
1792	16	8Sec_SciCalib_CrossTrkServoErr(sample 21 epoch 17)	Polynomial	-, -, 0, 0, 2.996, 0	-, -, 0, 0, 2.996, 0	S
1808	16	8Sec_SciCalib_InTrkServoErr(sample 21 epoch 17)	Polynomial	-, -, 0, 0, 0.5645, 0	-, -, 0, 0, 0.5653, 0	S
1824	2	8Sec_SciCalib_IECCACalibResistorTemp(epoch18 - Spare)	N/A	N/A	N/A	U
1826	14	8Sec_SciCalib_IECCACalibResistorTemp(epoch18)	Polynomial	-, -, 0, 0, 0.0062985, 21.052	-, -, 0, 0, 0.00632057, 22.89	S
1840	2	8Sec_SciCalib_LowRangeCalibResistor(epoch18 - Spare)	N/A	N/A	N/A	U
1842	14	8Sec_SciCalib_LowRangeCalibResistor(epoch18)	Polynomial	-, -, 0, 0, 0.00632450851228198, 23.6157147848609	-, -, 0, 0, 0.0062993081297153, 23.9436702010479	S
1856	2	8Sec_SciCalib_HighRangeCalibResistor(epoch18 - Spare)	N/A	N/A	N/A	U
1858	14	8Sec_SciCalib_HighRangeCalibResistor(epoch18)	Polynomial	-, -, 0, 0, 0.00632450851228198, 23.6157147848609	-, -, 0, 0, 0.0062993081297153, 23.9436702010479	S
1872	2	8Sec_SciCalib_ICTTemp#1(epoch18 - Spare)	N/A	N/A	N/A	U
1874	14	8Sec_SciCalib_ICTTemp#1(epoch18)	Polynomial	-, -, 0, 0, 0.00629693, 21.475	-, -, 0, 0, 0.00631454, 23.618	S
1888	2	8Sec_SciCalib_ICTTemp#2(epoch18 - Spare)	N/A	N/A	N/A	U
1890	14	8Sec_SciCalib_ICTTemp#2(epoch18)	Polynomial	-, -, 0, 0, 0.00631254, 22.144	-, -, 0, 0, 0.00631525, 23.481	S
1904	16	8Sec_SciCalib_CrossTrkServoErr(sample 21 epoch 18)	Polynomial	-, -, 0, 0, 2.996, 0	-, -, 0, 0, 2.996, 0	S
1920	16	8Sec_SciCalib_InTrkServoErr(sample 21 epoch 18)	Polynomial	-, -, 0, 0, 0.5645, 0	-, -, 0, 0, 0.5653, 0	S
1936	2	8Sec_SciCalib_IECCACalibResistorTemp(epoch19 - Spare)	N/A	N/A	N/A	U
1938	14	8Sec_SciCalib_IECCACalibResistorTemp(epoch19)	Polynomial	-, -, 0, 0, 0.0062985, 21.052	-, -, 0, 0, 0.00632057, 22.89	S
1952	2	8Sec_SciCalib_LowRangeCalibResistor(epoch19 - Spare)	N/A	N/A	N/A	U
1954	14	8Sec_SciCalib_LowRangeCalibResistor(epoch19)	Polynomial	-, -, 0, 0, 0.00632450851228198, 23.6157147848609	-, -, 0, 0, 0.0062993081297153, 23.9436702010479	S
1968	2	8Sec_SciCalib_HighRangeCalibResistor(epoch19 - Spare)	N/A	N/A	N/A	U
1970	14	8Sec_SciCalib_HighRangeCalibResistor(epoch19)	Polynomial	-, -, 0, 0, 0.00632450851228198, 23.6157147848609	-, -, 0, 0, 0.0062993081297153, 23.9436702010479	S
1984	2	8Sec_SciCalib_ICTTemp#1(epoch19 - Spare)	N/A	N/A	N/A	U
1986	14	8Sec_SciCalib_ICTTemp#1(epoch19)	Polynomial	-, -, 0, 0, 0.00629693, 21.475	-, -, 0, 0, 0.00631454, 23.618	S
2000	2	8Sec_SciCalib_ICTTemp#2(epoch19 - Spare)	N/A	N/A	N/A	U
2002	14	8Sec_SciCalib_ICTTemp#2(epoch19)	Polynomial	-, -, 0, 0, 0.00631254, 22.144	-, -, 0, 0, 0.00631525, 23.481	S
2016	16	8Sec_SciCalib_CrossTrkServoErr(sample 21 epoch 19)	Polynomial	-, -, 0, 0, 2.996, 0	-, -, 0, 0, 2.996, 0	S
2032	16	8Sec_SciCalib_InTrkServoErr(sample 21 epoch 19)	Polynomial	-, -, 0, 0, 0.5645, 0	-, -, 0, 0, 0.5653, 0	S
2048	2	8Sec_SciCalib_IECCACalibResistorTemp(epoch20 - Spare)	N/A	N/A	N/A	U
2050	14	8Sec_SciCalib_IECCACalibResistorTemp(epoch20)	Polynomial	-, -, 0, 0, 0.0062985, 21.052	-, -, 0, 0, 0.00632057, 22.89	S
2064	2	8Sec_SciCalib_LowRangeCalibResistor(epoch20 - Spare)	N/A	N/A	N/A	U
2066	14	8Sec_SciCalib_LowRangeCalibResistor(epoch20)	Polynomial	-, -, 0, 0, 0.00632450851228198, 23.6157147848609	-, -, 0, 0, 0.0062993081297153, 23.9436702010479	S
2080	2	8Sec_SciCalib_HighRangeCalibResistor(epoch20 - Spare)	N/A	N/A	N/A	U
2082	14	8Sec_SciCalib_HighRangeCalibResistor(epoch20)	Polynomial	-, -, 0, 0, 0.00632450851228198, 23.6157147848609	-, -, 0, 0, 0.0062993081297153, 23.9436702010479	S
2096	2	8Sec_SciCalib_ICTTemp#1(epoch20 - Spare)	N/A	N/A	N/A	U
2098	14	8Sec_SciCalib_ICTTemp#1(epoch20)	Polynomial	-, -, 0, 0, 0.00629693, 21.475	-, -, 0, 0, 0.00631454, 23.618	S
2112	2	8Sec_SciCalib_ICTTemp#2(epoch20 - Spare)	N/A	N/A	N/A	U
2114	14	8Sec_SciCalib_ICTTemp#2(epoch20)	Polynomial	-, -, 0, 0, 0.00631254, 22.144	-, -, 0, 0, 0.00631525, 23.481	S
2128	16	8Sec_SciCalib_CrossTrkServoErr(sample 21 epoch 20)	Polynomial	-, -, 0, 0, 2.996, 0	-, -, 0, 0, 2.996, 0	S
2144	16	8Sec_SciCalib_InTrkServoErr(sample 21 epoch 20)	Polynomial	-, -, 0, 0, 0.5645, 0	-, -, 0, 0, 0.5653, 0	S
2160	2	8Sec_SciCalib_IECCACalibResistorTemp(epoch21 - Spare)	N/A	N/A	N/A	U
2162	14	8Sec_SciCalib_IECCACalibResistorTemp(epoch21)	Polynomial	-, -, 0, 0, 0.0062985, 21.052	-, -, 0, 0, 0.00632057, 22.89	S
2176	2	8Sec_SciCalib_LowRangeCalibResistor(epoch21 - Spare)	N/A	N/A	N/A	U
2178	14	8Sec_SciCalib_LowRangeCalibResistor(epoch21)	Polynomial	-, -, 0, 0, 0.00632450851228198, 23.6157147848609	-, -, 0, 0, 0.0062993081297153, 23.9436702010479	S

2192	2	8Sec_SciCalib_HighRangeCalibResistor(epoch21 - Spare)	N/A	N/A	N/A	U
2194	14	8Sec_SciCalib_HighRangeCalibResistor(epoch21)	Polynomial	-, -, 0, 0, 0.00632450851228198, 23.6157147848609	-, -, 0, 0, 0.0062993081297153, 23.9436702010479	S
2208	2	8Sec_SciCalib_ICTTemp#1(epoch21 - Spare)	N/A	N/A	N/A	U
2210	14	8Sec_SciCalib_ICTTemp#1(epoch21)	Polynomial	-, -, 0, 0, 0.00629693, 21.475	-, -, 0, 0, 0.00631454, 23.618	S
2224	2	8Sec_SciCalib_ICTTemp#2(epoch21 - Spare)	N/A	N/A	N/A	U
2226	14	8Sec_SciCalib_ICTTemp#2(epoch21)	Polynomial	-, -, 0, 0, 0.00631254, 22.144	-, -, 0, 0, 0.00631525, 23.481	S
2240	16	8Sec_SciCalib_CrossTrkServoErr(sample 21 epoch 21)	Polynomial	-, -, 0, 0, 2.996, 0	-, -, 0, 0, 2.996, 0	S
2256	16	8Sec_SciCalib_InTrkServoErr(sample 21 epoch 21)	Polynomial	-, -, 0, 0, 0.5645, 0	-, -, 0, 0, 0.5653, 0	S
2272	2	8Sec_SciCalib_IECCACalibResistorTemp(epoch22 - Spare)	N/A	N/A	N/A	U
2274	14	8Sec_SciCalib_IECCACalibResistorTemp(epoch22)	Polynomial	-, -, 0, 0, 0.0062985, 21.052	-, -, 0, 0, 0.00632057, 22.89	S
2288	2	8Sec_SciCalib_LowRangeCalibResistor(epoch22 - Spare)	N/A	N/A	N/A	U
2290	14	8Sec_SciCalib_LowRangeCalibResistor(epoch22)	Polynomial	-, -, 0, 0, 0.00632450851228198, 23.6157147848609	-, -, 0, 0, 0.0062993081297153, 23.9436702010479	S
2304	2	8Sec_SciCalib_HighRangeCalibResistor(epoch22 - Spare)	N/A	N/A	N/A	U
2306	14	8Sec_SciCalib_HighRangeCalibResistor(epoch22)	Polynomial	-, -, 0, 0, 0.00632450851228198, 23.6157147848609	-, -, 0, 0, 0.0062993081297153, 23.9436702010479	S
2320	2	8Sec_SciCalib_ICTTemp#1(epoch22 - Spare)	N/A	N/A	N/A	U
2322	14	8Sec_SciCalib_ICTTemp#1(epoch22)	Polynomial	-, -, 0, 0, 0.00629693, 21.475	-, -, 0, 0, 0.00631454, 23.618	S
2336	2	8Sec_SciCalib_ICTTemp#2(epoch22 - Spare)	N/A	N/A	N/A	U
2338	14	8Sec_SciCalib_ICTTemp#2(epoch22)	Polynomial	-, -, 0, 0, 0.00631254, 22.144	-, -, 0, 0, 0.00631525, 23.481	S
2352	16	8Sec_SciCalib_CrossTrkServoErr(sample 21 epoch 22)	Polynomial	-, -, 0, 0, 2.996, 0	-, -, 0, 0, 2.996, 0	S
2368	16	8Sec_SciCalib_InTrkServoErr(sample 21 epoch 22)	Polynomial	-, -, 0, 0, 0.5645, 0	-, -, 0, 0, 0.5653, 0	S
2384	2	8Sec_SciCalib_IECCACalibResistorTemp(epoch23 - Spare)	N/A	N/A	N/A	U
2386	14	8Sec_SciCalib_IECCACalibResistorTemp(epoch23)	Polynomial	-, -, 0, 0, 0.0062985, 21.052	-, -, 0, 0, 0.00632057, 22.89	S
2400	2	8Sec_SciCalib_LowRangeCalibResistor(epoch23 - Spare)	N/A	N/A	N/A	U
2402	14	8Sec_SciCalib_LowRangeCalibResistor(epoch23)	Polynomial	-, -, 0, 0, 0.00632450851228198, 23.6157147848609	-, -, 0, 0, 0.0062993081297153, 23.9436702010479	S
2416	2	8Sec_SciCalib_HighRangeCalibResistor(epoch23 - Spare)	N/A	N/A	N/A	U
2418	14	8Sec_SciCalib_HighRangeCalibResistor(epoch23)	Polynomial	-, -, 0, 0, 0.00632450851228198, 23.6157147848609	-, -, 0, 0, 0.0062993081297153, 23.9436702010479	S
2432	2	8Sec_SciCalib_ICTTemp#1(epoch23 - Spare)	N/A	N/A	N/A	U
2434	14	8Sec_SciCalib_ICTTemp#1(epoch23)	Polynomial	-, -, 0, 0, 0.00629693, 21.475	-, -, 0, 0, 0.00631454, 23.618	S
2448	2	8Sec_SciCalib_ICTTemp#2(epoch23 - Spare)	N/A	N/A	N/A	U
2450	14	8Sec_SciCalib_ICTTemp#2(epoch23)	Polynomial	-, -, 0, 0, 0.00631254, 22.144	-, -, 0, 0, 0.00631525, 23.481	S
2464	16	8Sec_SciCalib_CrossTrkServoErr(sample 21 epoch 23)	Polynomial	-, -, 0, 0, 2.996, 0	-, -, 0, 0, 2.996, 0	S
2480	16	8Sec_SciCalib_InTrkServoErr(sample 21 epoch 23)	Polynomial	-, -, 0, 0, 0.5645, 0	-, -, 0, 0, 0.5653, 0	S
2496	2	8Sec_SciCalib_IECCACalibResistorTemp(epoch24 - Spare)	N/A	N/A	N/A	U
2498	14	8Sec_SciCalib_IECCACalibResistorTemp(epoch24)	Polynomial	-, -, 0, 0, 0.0062985, 21.052	-, -, 0, 0, 0.00632057, 22.89	S
2512	2	8Sec_SciCalib_LowRangeCalibResistor(epoch24 - Spare)	N/A	N/A	N/A	U
2514	14	8Sec_SciCalib_LowRangeCalibResistor(epoch24)	Polynomial	-, -, 0, 0, 0.00632450851228198, 23.6157147848609	-, -, 0, 0, 0.0062993081297153, 23.9436702010479	S
2528	2	8Sec_SciCalib_HighRangeCalibResistor(epoch24 - Spare)	N/A	N/A	N/A	U
2530	14	8Sec_SciCalib_HighRangeCalibResistor(epoch24)	Polynomial	-, -, 0, 0, 0.00632450851228198, 23.6157147848609	-, -, 0, 0, 0.0062993081297153, 23.9436702010479	S
2544	2	8Sec_SciCalib_ICTTemp#1(epoch24 - Spare)	N/A	N/A	N/A	U
2546	14	8Sec_SciCalib_ICTTemp#1(epoch24)	Polynomial	-, -, 0, 0, 0.00629693, 21.475	-, -, 0, 0, 0.00631454, 23.618	S
2560	2	8Sec_SciCalib_ICTTemp#2(epoch24 - Spare)	N/A	N/A	N/A	U
2562	14	8Sec_SciCalib_ICTTemp#2(epoch24)	Polynomial	-, -, 0, 0, 0.00631254, 22.144	-, -, 0, 0, 0.00631525, 23.481	S
2576	16	8Sec_SciCalib_CrossTrkServoErr(sample 21 epoch 24)	Polynomial	-, -, 0, 0, 2.996, 0	-, -, 0, 0, 2.996, 0	S
2592	16	8Sec_SciCalib_InTrkServoErr(sample 21 epoch 24)	Polynomial	-, -, 0, 0, 0.5645, 0	-, -, 0, 0, 0.5653, 0	S
2608	2	8Sec_SciCalib_IECCACalibResistorTemp(epoch25 - Spare)	N/A	N/A	N/A	U
2610	14	8Sec_SciCalib_IECCACalibResistorTemp(epoch25)	Polynomial	-, -, 0, 0, 0.0062985, 21.052	-, -, 0, 0, 0.00632057, 22.89	S
2624	2	8Sec_SciCalib_LowRangeCalibResistor(epoch25 - Spare)	N/A	N/A	N/A	U
2626	14	8Sec_SciCalib_LowRangeCalibResistor(epoch25)	Polynomial	-, -, 0, 0, 0.00632450851228198, 23.6157147848609	-, -, 0, 0, 0.0062993081297153, 23.9436702010479	S

2640	2	8Sec_SciCalib_HighRangeCalibResistor(epoch25 - Spare)	N/A	N/A	N/A	U
2642	14	8Sec_SciCalib_HighRangeCalibResistor(epoch25)	Polynomial	-, -, 0, 0, 0.00632450851228198, 23.6157147848609	-, -, 0, 0, 0.0062993081297153, 23.9436702010479	S
2656	2	8Sec_SciCalib_ICTTemp#1(epoch25 - Spare)	N/A	N/A	N/A	U
2658	14	8Sec_SciCalib_ICTTemp#1(epoch25)	Polynomial	-, -, 0, 0, 0.00629693, 21.475	-, -, 0, 0, 0.00631454, 23.618	S
2672	2	8Sec_SciCalib_ICTTemp#2(epoch25 - Spare)	N/A	N/A	N/A	U
2674	14	8Sec_SciCalib_ICTTemp#2(epoch25)	Polynomial	-, -, 0, 0, 0.00631254, 22.144	-, -, 0, 0, 0.00631525, 23.481	S
2688	16	8Sec_SciCalib_CrossTrkServoErr(sample 21 epoch 25)	Polynomial	-, -, 0, 0, 2.996, 0	-, -, 0, 0, 2.996, 0	S
2704	16	8Sec_SciCalib_InTrkServoErr(sample 21 epoch 25)	Polynomial	-, -, 0, 0, 0.5645, 0	-, -, 0, 0, 0.5653, 0	S
2720	2	8Sec_SciCalib_IECCACalibResistorTemp(epoch26 - Spare)	N/A	N/A	N/A	U
2722	14	8Sec_SciCalib_IECCACalibResistorTemp(epoch26)	Polynomial	-, -, 0, 0, 0.0062985, 21.052	-, -, 0, 0, 0.00632057, 22.89	S
2736	2	8Sec_SciCalib_LowRangeCalibResistor(epoch26 - Spare)	N/A	N/A	N/A	U
2738	14	8Sec_SciCalib_LowRangeCalibResistor(epoch26)	Polynomial	-, -, 0, 0, 0.00632450851228198, 23.6157147848609	-, -, 0, 0, 0.0062993081297153, 23.9436702010479	S
2752	2	8Sec_SciCalib_HighRangeCalibResistor(epoch26 - Spare)	N/A	N/A	N/A	U
2754	14	8Sec_SciCalib_HighRangeCalibResistor(epoch26)	Polynomial	-, -, 0, 0, 0.00632450851228198, 23.6157147848609	-, -, 0, 0, 0.0062993081297153, 23.9436702010479	S
2768	2	8Sec_SciCalib_ICTTemp#1(epoch26 - Spare)	N/A	N/A	N/A	U
2770	14	8Sec_SciCalib_ICTTemp#1(epoch26)	Polynomial	-, -, 0, 0, 0.00629693, 21.475	-, -, 0, 0, 0.00631454, 23.618	S
2784	2	8Sec_SciCalib_ICTTemp#2(epoch26 - Spare)	N/A	N/A	N/A	U
2786	14	8Sec_SciCalib_ICTTemp#2(epoch26)	Polynomial	-, -, 0, 0, 0.00631254, 22.144	-, -, 0, 0, 0.00631525, 23.481	S
2800	16	8Sec_SciCalib_CrossTrkServoErr(sample 21 epoch 26)	Polynomial	-, -, 0, 0, 2.996, 0	-, -, 0, 0, 2.996, 0	S
2816	16	8Sec_SciCalib_InTrkServoErr(sample 21 epoch 26)	Polynomial	-, -, 0, 0, 0.5645, 0	-, -, 0, 0, 0.5653, 0	S
2832	2	8Sec_SciCalib_IECCACalibResistorTemp(epoch27 - Spare)	N/A	N/A	N/A	U
2834	14	8Sec_SciCalib_IECCACalibResistorTemp(epoch27)	Polynomial	-, -, 0, 0, 0.0062985, 21.052	-, -, 0, 0, 0.00632057, 22.89	S
2848	2	8Sec_SciCalib_LowRangeCalibResistor(epoch27 - Spare)	N/A	N/A	N/A	U
2850	14	8Sec_SciCalib_LowRangeCalibResistor(epoch27)	Polynomial	-, -, 0, 0, 0.00632450851228198, 23.6157147848609	-, -, 0, 0, 0.0062993081297153, 23.9436702010479	S
2864	2	8Sec_SciCalib_HighRangeCalibResistor(epoch27 - Spare)	N/A	N/A	N/A	U
2866	14	8Sec_SciCalib_HighRangeCalibResistor(epoch27)	Polynomial	-, -, 0, 0, 0.00632450851228198, 23.6157147848609	-, -, 0, 0, 0.0062993081297153, 23.9436702010479	S
2880	2	8Sec_SciCalib_ICTTemp#1(epoch27 - Spare)	N/A	N/A	N/A	U
2882	14	8Sec_SciCalib_ICTTemp#1(epoch27)	Polynomial	-, -, 0, 0, 0.00629693, 21.475	-, -, 0, 0, 0.00631454, 23.618	S
2896	2	8Sec_SciCalib_ICTTemp#2(epoch27 - Spare)	N/A	N/A	N/A	U
2898	14	8Sec_SciCalib_ICTTemp#2(epoch27)	Polynomial	-, -, 0, 0, 0.00631254, 22.144	-, -, 0, 0, 0.00631525, 23.481	S
2912	16	8Sec_SciCalib_CrossTrkServoErr(sample 21 epoch 27)	Polynomial	-, -, 0, 0, 2.996, 0	-, -, 0, 0, 2.996, 0	S
2928	16	8Sec_SciCalib_InTrkServoErr(sample 21 epoch 27)	Polynomial	-, -, 0, 0, 0.5645, 0	-, -, 0, 0, 0.5653, 0	S
2944	2	8Sec_SciCalib_IECCACalibResistorTemp(epoch28 - Spare)	N/A	N/A	N/A	U
2946	14	8Sec_SciCalib_IECCACalibResistorTemp(epoch28)	Polynomial	-, -, 0, 0, 0.0062985, 21.052	-, -, 0, 0, 0.00632057, 22.89	S
2960	2	8Sec_SciCalib_LowRangeCalibResistor(epoch28 - Spare)	N/A	N/A	N/A	U
2962	14	8Sec_SciCalib_LowRangeCalibResistor(epoch28)	Polynomial	-, -, 0, 0, 0.00632450851228198, 23.6157147848609	-, -, 0, 0, 0.0062993081297153, 23.9436702010479	S
2976	2	8Sec_SciCalib_HighRangeCalibResistor(epoch28 - Spare)	N/A	N/A	N/A	U
2978	14	8Sec_SciCalib_HighRangeCalibResistor(epoch28)	Polynomial	-, -, 0, 0, 0.00632450851228198, 23.6157147848609	-, -, 0, 0, 0.0062993081297153, 23.9436702010479	S
2992	2	8Sec_SciCalib_ICTTemp#1(epoch28 - Spare)	N/A	N/A	N/A	U
2994	14	8Sec_SciCalib_ICTTemp#1(epoch28)	Polynomial	-, -, 0, 0, 0.00629693, 21.475	-, -, 0, 0, 0.00631454, 23.618	S
3008	2	8Sec_SciCalib_ICTTemp#2(epoch28 - Spare)	N/A	N/A	N/A	U
3010	14	8Sec_SciCalib_ICTTemp#2(epoch28)	Polynomial	-, -, 0, 0, 0.00631254, 22.144	-, -, 0, 0, 0.00631525, 23.481	S
3024	16	8Sec_SciCalib_CrossTrkServoErr(sample 21 epoch 28)	Polynomial	-, -, 0, 0, 2.996, 0	-, -, 0, 0, 2.996, 0	S
3040	16	8Sec_SciCalib_InTrkServoErr(sample 21 epoch 28)	Polynomial	-, -, 0, 0, 0.5645, 0	-, -, 0, 0, 0.5653, 0	S
3056	2	8Sec_SciCalib_IECCACalibResistorTemp(epoch29 - Spare)	N/A	N/A	N/A	U
3058	14	8Sec_SciCalib_IECCACalibResistorTemp(epoch29)	Polynomial	-, -, 0, 0, 0.0062985, 21.052	-, -, 0, 0, 0.00632057, 22.89	S
3072	2	8Sec_SciCalib_LowRangeCalibResistor(epoch29 - Spare)	N/A	N/A	N/A	U
3074	14	8Sec_SciCalib_LowRangeCalibResistor(epoch29)	Polynomial	-, -, 0, 0, 0.00632450851228198, 23.6157147848609	-, -, 0, 0, 0.0062993081297153, 23.9436702010479	S

3088	2	8Sec_SciCalib_HighRangeCalibResistor(epoch29 - Spare)	N/A	N/A	N/A	U
3090	14	8Sec_SciCalib_HighRangeCalibResistor(epoch29)	Polynomial	-, -, 0, 0, 0.00632450851228198, 23.6157147848609	-, -, 0, 0, 0.0062993081297153, 23.9436702010479	S
3104	2	8Sec_SciCalib_ICTTemp#1(epoch29 - Spare)	N/A	N/A	N/A	U
3106	14	8Sec_SciCalib_ICTTemp#1(epoch29)	Polynomial	-, -, 0, 0, 0.00629693, 21.475	-, -, 0, 0, 0.00631454, 23.618	S
3120	2	8Sec_SciCalib_ICTTemp#2(epoch29 - Spare)	N/A	N/A	N/A	U
3122	14	8Sec_SciCalib_ICTTemp#2(epoch29)	Polynomial	-, -, 0, 0, 0.00631254, 22.144	-, -, 0, 0, 0.00631525, 23.481	S
3136	16	8Sec_SciCalib_CrossTrkServoErr(sample 21 epoch 29)	Polynomial	-, -, 0, 0, 2.996, 0	-, -, 0, 0, 2.996, 0	S
3152	16	8Sec_SciCalib_InTrkServoErr(sample 21 epoch 29)	Polynomial	-, -, 0, 0, 0.5645, 0	-, -, 0, 0, 0.5653, 0	S
3168	2	8Sec_SciCalib_IECCACalibResistorTemp(epoch30 - Spare)	N/A	N/A	N/A	U
3170	14	8Sec_SciCalib_IECCACalibResistorTemp(epoch30)	Polynomial	-, -, 0, 0, 0.0062985, 21.052	-, -, 0, 0, 0.00632057, 22.89	S
3184	2	8Sec_SciCalib_LowRangeCalibResistor(epoch30 - Spare)	N/A	N/A	N/A	U
3186	14	8Sec_SciCalib_LowRangeCalibResistor(epoch30)	Polynomial	-, -, 0, 0, 0.00632450851228198, 23.6157147848609	-, -, 0, 0, 0.0062993081297153, 23.9436702010479	S
3200	2	8Sec_SciCalib_HighRangeCalibResistor(epoch30 - Spare)	N/A	N/A	N/A	U
3202	14	8Sec_SciCalib_HighRangeCalibResistor(epoch30)	Polynomial	-, -, 0, 0, 0.00632450851228198, 23.6157147848609	-, -, 0, 0, 0.0062993081297153, 23.9436702010479	S
3216	2	8Sec_SciCalib_ICTTemp#1(epoch30 - Spare)	N/A	N/A	N/A	U
3218	14	8Sec_SciCalib_ICTTemp#1(epoch30)	Polynomial	-, -, 0, 0, 0.00629693, 21.475	-, -, 0, 0, 0.00631454, 23.618	S
3232	2	8Sec_SciCalib_ICTTemp#2(epoch30 - Spare)	N/A	N/A	N/A	U
3234	14	8Sec_SciCalib_ICTTemp#2(epoch30)	Polynomial	-, -, 0, 0, 0.00631254, 22.144	-, -, 0, 0, 0.00631525, 23.481	S
3248	16	8Sec_SciCalib_CrossTrkServoErr(sample 21 epoch 30)	Polynomial	-, -, 0, 0, 2.996, 0	-, -, 0, 0, 2.996, 0	S
3264	16	8Sec_SciCalib_InTrkServoErr(sample 21 epoch 30)	Polynomial	-, -, 0, 0, 0.5645, 0	-, -, 0, 0, 0.5653, 0	S
3280	2	8Sec_SciCalib_IECCACalibResistorTemp(epoch31 - Spare)	N/A	N/A	N/A	U
3282	14	8Sec_SciCalib_IECCACalibResistorTemp(epoch31)	Polynomial	-, -, 0, 0, 0.0062985, 21.052	-, -, 0, 0, 0.00632057, 22.89	S
3296	2	8Sec_SciCalib_LowRangeCalibResistor(epoch31 - Spare)	N/A	N/A	N/A	U
3298	14	8Sec_SciCalib_LowRangeCalibResistor(epoch31)	Polynomial	-, -, 0, 0, 0.00632450851228198, 23.6157147848609	-, -, 0, 0, 0.0062993081297153, 23.9436702010479	S
3312	2	8Sec_SciCalib_HighRangeCalibResistor(epoch31 - Spare)	N/A	N/A	N/A	U
3314	14	8Sec_SciCalib_HighRangeCalibResistor(epoch31)	Polynomial	-, -, 0, 0, 0.00632450851228198, 23.6157147848609	-, -, 0, 0, 0.0062993081297153, 23.9436702010479	S
3328	2	8Sec_SciCalib_ICTTemp#1(epoch31 - Spare)	N/A	N/A	N/A	U
3330	14	8Sec_SciCalib_ICTTemp#1(epoch31)	Polynomial	-, -, 0, 0, 0.00629693, 21.475	-, -, 0, 0, 0.00631454, 23.618	S
3344	2	8Sec_SciCalib_ICTTemp#2(epoch31 - Spare)	N/A	N/A	N/A	U
3346	14	8Sec_SciCalib_ICTTemp#2(epoch31)	Polynomial	-, -, 0, 0, 0.00631254, 22.144	-, -, 0, 0, 0.00631525, 23.481	S
3360	16	8Sec_SciCalib_CrossTrkServoErr(sample 21 epoch 31)	Polynomial	-, -, 0, 0, 2.996, 0	-, -, 0, 0, 2.996, 0	S
3376	16	8Sec_SciCalib_InTrkServoErr(sample 21 epoch 31)	Polynomial	-, -, 0, 0, 0.5645, 0	-, -, 0, 0, 0.5653, 0	S
3392	2	8Sec_SciCalib_IECCACalibResistorTemp(epoch32 - Spare)	N/A	N/A	N/A	U
3394	14	8Sec_SciCalib_IECCACalibResistorTemp(epoch32)	Polynomial	-, -, 0, 0, 0.0062985, 21.052	-, -, 0, 0, 0.00632057, 22.89	S
3408	2	8Sec_SciCalib_LowRangeCalibResistor(epoch32 - Spare)	N/A	N/A	N/A	U
3410	14	8Sec_SciCalib_LowRangeCalibResistor(epoch32)	Polynomial	-, -, 0, 0, 0.00632450851228198, 23.6157147848609	-, -, 0, 0, 0.0062993081297153, 23.9436702010479	S
3424	2	8Sec_SciCalib_HighRangeCalibResistor(epoch32 - Spare)	N/A	N/A	N/A	U
3426	14	8Sec_SciCalib_HighRangeCalibResistor(epoch32)	Polynomial	-, -, 0, 0, 0.00632450851228198, 23.6157147848609	-, -, 0, 0, 0.0062993081297153, 23.9436702010479	S
3440	2	8Sec_SciCalib_ICTTemp#1(epoch32 - Spare)	N/A	N/A	N/A	U
3442	14	8Sec_SciCalib_ICTTemp#1(epoch32)	Polynomial	-, -, 0, 0, 0.00629693, 21.475	-, -, 0, 0, 0.00631454, 23.618	S
3456	2	8Sec_SciCalib_ICTTemp#2(epoch32 - Spare)	N/A	N/A	N/A	U
3458	14	8Sec_SciCalib_ICTTemp#2(epoch32)	Polynomial	-, -, 0, 0, 0.00631254, 22.144	-, -, 0, 0, 0.00631525, 23.481	S
3472	16	8Sec_SciCalib_CrossTrkServoErr(sample 21 epoch 32)	Polynomial	-, -, 0, 0, 2.996, 0	-, -, 0, 0, 2.996, 0	S
3488	16	8Sec_SciCalib_InTrkServoErr(sample 21 epoch 32)	Polynomial	-, -, 0, 0, 0.5645, 0	-, -, 0, 0, 0.5653, 0	S
3504	2	8Sec_SciCalib_IECCACalibResistorTemp(epoch33 - Spare)	N/A	N/A	N/A	U
3506	14	8Sec_SciCalib_IECCACalibResistorTemp(epoch33)	Polynomial	-, -, 0, 0, 0.0062985, 21.052	-, -, 0, 0, 0.00632057, 22.89	S
3520	2	8Sec_SciCalib_LowRangeCalibResistor(epoch33 - Spare)	N/A	N/A	N/A	U
3522	14	8Sec_SciCalib_LowRangeCalibResistor(epoch33)	Polynomial	-, -, 0, 0, 0.00632450851228198, 23.6157147848609	-, -, 0, 0, 0.0062993081297153, 23.9436702010479	S

3536	2	8Sec_SciCalib_HighRangeCalibResistor(epoch33 - Spare)	N/A	N/A	N/A	U
3538	14	8Sec_SciCalib_HighRangeCalibResistor(epoch33)	Polynomial	-, -, 0, 0, 0.00632450851228198, 23.6157147848609	-, -, 0, 0, 0.0062993081297153, 23.9436702010479	S
3552	2	8Sec_SciCalib_ICTTemp#1(epoch33 - Spare)	N/A	N/A	N/A	U
3554	14	8Sec_SciCalib_ICTTemp#1(epoch33)	Polynomial	-, -, 0, 0, 0.00629693, 21.475	-, -, 0, 0, 0.00631454, 23.618	S
3568	2	8Sec_SciCalib_ICTTemp#2(epoch33 - Spare)	N/A	N/A	N/A	U
3570	14	8Sec_SciCalib_ICTTemp#2(epoch33)	Polynomial	-, -, 0, 0, 0.00631254, 22.144	-, -, 0, 0, 0.00631525, 23.481	S
3584	16	8Sec_SciCalib_CrossTrkServoErr(sample 21 epoch 33)	Polynomial	-, -, 0, 0, 2.996, 0	-, -, 0, 0, 2.996, 0	S
3600	16	8Sec_SciCalib_InTrkServoErr(sample 21 epoch 33)	Polynomial	-, -, 0, 0, 0.5645, 0	-, -, 0, 0, 0.5653, 0	S
3616	2	8Sec_SciCalib_IECCACalibResistorTemp(epoch34 - Spare)	N/A	N/A	N/A	U
3618	14	8Sec_SciCalib_IECCACalibResistorTemp(epoch34)	Polynomial	-, -, 0, 0, 0.0062985, 21.052	-, -, 0, 0, 0.00632057, 22.89	S
3632	2	8Sec_SciCalib_LowRangeCalibResistor(epoch34 - Spare)	N/A	N/A	N/A	U
3634	14	8Sec_SciCalib_LowRangeCalibResistor(epoch34)	Polynomial	-, -, 0, 0, 0.00632450851228198, 23.6157147848609	-, -, 0, 0, 0.0062993081297153, 23.9436702010479	S
3648	2	8Sec_SciCalib_HighRangeCalibResistor(epoch34 - Spare)	N/A	N/A	N/A	U
3650	14	8Sec_SciCalib_HighRangeCalibResistor(epoch34)	Polynomial	-, -, 0, 0, 0.00632450851228198, 23.6157147848609	-, -, 0, 0, 0.0062993081297153, 23.9436702010479	S
3664	2	8Sec_SciCalib_ICTTemp#1(epoch34 - Spare)	N/A	N/A	N/A	U
3666	14	8Sec_SciCalib_ICTTemp#1(epoch34)	Polynomial	-, -, 0, 0, 0.00629693, 21.475	-, -, 0, 0, 0.00631454, 23.618	S
3680	2	8Sec_SciCalib_ICTTemp#2(epoch34 - Spare)	N/A	N/A	N/A	U
3682	14	8Sec_SciCalib_ICTTemp#2(epoch34)	Polynomial	-, -, 0, 0, 0.00631254, 22.144	-, -, 0, 0, 0.00631525, 23.481	S
3696	2	8Sec_SciCalib_IECCACalibResistorTemp(epoch35 - Spare)	N/A	N/A	N/A	U
3698	14	8Sec_SciCalib_IECCACalibResistorTemp(epoch35)	Polynomial	-, -, 0, 0, 0.0062985, 21.052	-, -, 0, 0, 0.00632057, 22.89	S
3712	2	8Sec_SciCalib_LowRangeCalibResistor(epoch35 - Spare)	N/A	N/A	N/A	U
3714	14	8Sec_SciCalib_LowRangeCalibResistor(epoch35)	Polynomial	-, -, 0, 0, 0.00632450851228198, 23.6157147848609	-, -, 0, 0, 0.0062993081297153, 23.9436702010479	S
3728	2	8Sec_SciCalib_HighRangeCalibResistor(epoch35 - Spare)	N/A	N/A	N/A	U
3730	14	8Sec_SciCalib_HighRangeCalibResistor(epoch35)	Polynomial	-, -, 0, 0, 0.00632450851228198, 23.6157147848609	-, -, 0, 0, 0.0062993081297153, 23.9436702010479	S
3744	2	8Sec_SciCalib_ICTTemp#1(epoch35 - Spare)	N/A	N/A	N/A	U
3746	14	8Sec_SciCalib_ICTTemp#1(epoch35)	Polynomial	-, -, 0, 0, 0.00629693, 21.475	-, -, 0, 0, 0.00631454, 23.618	S
3760	2	8Sec_SciCalib_ICTTemp#2(epoch35 - Spare)	N/A	N/A	N/A	U
3762	14	8Sec_SciCalib_ICTTemp#2(epoch35)	Polynomial	-, -, 0, 0, 0.00631254, 22.144	-, -, 0, 0, 0.00631525, 23.481	S
3776	2	8Sec_SciCalib_IECCACalibResistorTemp(epoch36 - Spare)	N/A	N/A	N/A	U
3778	14	8Sec_SciCalib_IECCACalibResistorTemp(epoch36)	Polynomial	-, -, 0, 0, 0.0062985, 21.052	-, -, 0, 0, 0.00632057, 22.89	S
3792	2	8Sec_SciCalib_LowRangeCalibResistor(epoch36 - Spare)	N/A	N/A	N/A	U
3794	14	8Sec_SciCalib_LowRangeCalibResistor(epoch36)	Polynomial	-, -, 0, 0, 0.00632450851228198, 23.6157147848609	-, -, 0, 0, 0.0062993081297153, 23.9436702010479	S
3808	2	8Sec_SciCalib_HighRangeCalibResistor(epoch36 - Spare)	N/A	N/A	N/A	U
3810	14	8Sec_SciCalib_HighRangeCalibResistor(epoch36)	Polynomial	-, -, 0, 0, 0.00632450851228198, 23.6157147848609	-, -, 0, 0, 0.0062993081297153, 23.9436702010479	S
3824	2	8Sec_SciCalib_ICTTemp#1(epoch36 - Spare)	N/A	N/A	N/A	U
3826	14	8Sec_SciCalib_ICTTemp#1(epoch36)	Polynomial	-, -, 0, 0, 0.00629693, 21.475	-, -, 0, 0, 0.00631454, 23.618	S
3840	2	8Sec_SciCalib_ICTTemp#2(epoch36 - Spare)	N/A	N/A	N/A	U
3842	14	8Sec_SciCalib_ICTTemp#2(epoch36)	Polynomial	-, -, 0, 0, 0.00631254, 22.144	-, -, 0, 0, 0.00631525, 23.481	S
3856	2	8Sec_SciCalib_IECCACalibResistorTemp(epoch37 - Spare)	N/A	N/A	N/A	U
3858	14	8Sec_SciCalib_IECCACalibResistorTemp(epoch37)	Polynomial	-, -, 0, 0, 0.0062985, 21.052	-, -, 0, 0, 0.00632057, 22.89	S
3872	2	8Sec_SciCalib_LowRangeCalibResistor(epoch37 - Spare)	N/A	N/A	N/A	U
3874	14	8Sec_SciCalib_LowRangeCalibResistor(epoch37)	Polynomial	-, -, 0, 0, 0.00632450851228198, 23.6157147848609	-, -, 0, 0, 0.0062993081297153, 23.9436702010479	S
3888	2	8Sec_SciCalib_HighRangeCalibResistor(epoch37 - Spare)	N/A	N/A	N/A	U
3890	14	8Sec_SciCalib_HighRangeCalibResistor(epoch37)	Polynomial	-, -, 0, 0, 0.00632450851228198, 23.6157147848609	-, -, 0, 0, 0.0062993081297153, 23.9436702010479	S
3904	2	8Sec_SciCalib_ICTTemp#1(epoch37 - Spare)	N/A	N/A	N/A	U
3906	14	8Sec_SciCalib_ICTTemp#1(epoch37)	Polynomial	-, -, 0, 0, 0.00629693, 21.475	-, -, 0, 0, 0.00631454, 23.618	S
3920	2	8Sec_SciCalib_ICTTemp#2(epoch37 - Spare)	N/A	N/A	N/A	U
3922	14	8Sec_SciCalib_ICTTemp#2(epoch37)	Polynomial	-, -, 0, 0, 0.00631254, 22.144	-, -, 0, 0, 0.00631525, 23.481	S

3936	2	8Sec_SciCalib_IECCACalibResistorTemp(epoch38 - Spare)	N/A	N/A	N/A	U
3938	14	8Sec_SciCalib_IECCACalibResistorTemp(epoch38)	Polynomial	-, -, 0, 0, 0.0062985, 21.052	-, -, 0, 0, 0.00632057, 22.89	S
3952	2	8Sec_SciCalib_LowRangeCalibResistor(epoch38 - Spare)	N/A	N/A	N/A	U
3954	14	8Sec_SciCalib_LowRangeCalibResistor(epoch38)	Polynomial	-, -, 0, 0, 0.00632450851228198, 23.6157147848609	-, -, 0, 0, 0.0062993081297153, 23.9436702010479	S
3968	2	8Sec_SciCalib_HighRangeCalibResistor(epoch38 - Spare)	N/A	N/A	N/A	U
3970	14	8Sec_SciCalib_HighRangeCalibResistor(epoch38)	Polynomial	-, -, 0, 0, 0.00632450851228198, 23.6157147848609	-, -, 0, 0, 0.0062993081297153, 23.9436702010479	S
3984	2	8Sec_SciCalib_ICTTemp#1(epoch38 - Spare)	N/A	N/A	N/A	U
3986	14	8Sec_SciCalib_ICTTemp#1(epoch38)	Polynomial	-, -, 0, 0, 0.00629693, 21.475	-, -, 0, 0, 0.00631454, 23.618	S
4000	2	8Sec_SciCalib_ICTTemp#2(epoch38 - Spare)	N/A	N/A	N/A	U
4002	14	8Sec_SciCalib_ICTTemp#2(epoch38)	Polynomial	-, -, 0, 0, 0.00631254, 22.144	-, -, 0, 0, 0.00631525, 23.481	S
4016	2	8Sec_SciCalib_LaserDiodeCurrent(epoch39 - Spare)	N/A	N/A	N/A	U
4018	14	8Sec_SciCalib_LaserDiodeCurrent(epoch39)	Polynomial	-, -, 0, 0, 0.0000030517578125, 0.035	-, -, 0, 0, 0.0000030517578125, 0.035	S
4032	2	8Sec_SciCalib_IECCACalibResistorTemp(epoch39 - Spare)	N/A	N/A	N/A	U
4034	14	8Sec_SciCalib_IECCACalibResistorTemp(epoch39)	Polynomial	-, -, 0, 0, 0.0062985, 21.052	-, -, 0, 0, 0.00632057, 22.89	S
4048	2	8Sec_SciCalib_LowRangeCalibResistor(epoch39 - Spare)	N/A	N/A	N/A	U
4050	14	8Sec_SciCalib_LowRangeCalibResistor(epoch39)	Polynomial	-, -, 0, 0, 0.00632450851228198, 23.6157147848609	-, -, 0, 0, 0.0062993081297153, 23.9436702010479	S
4064	2	8Sec_SciCalib_HighRangeCalibResistor(epoch39 - Spare)	N/A	N/A	N/A	U
4066	14	8Sec_SciCalib_HighRangeCalibResistor(epoch39)	Polynomial	-, -, 0, 0, 0.00632450851228198, 23.6157147848609	-, -, 0, 0, 0.0062993081297153, 23.9436702010479	S
4080	2	8Sec_SciCalib_ICTTemp#1(epoch39 - Spare)	N/A	N/A	N/A	U
4082	14	8Sec_SciCalib_ICTTemp#1(epoch39)	Polynomial	-, -, 0, 0, 0.00629693, 21.475	-, -, 0, 0, 0.00631454, 23.618	S
4096	2	8Sec_SciCalib_ICTTemp#2(epoch39 - Spare)	N/A	N/A	N/A	U
4098	14	8Sec_SciCalib_ICTTemp#2(epoch39)	Polynomial	-, -, 0, 0, 0.00631254, 22.144	-, -, 0, 0, 0.00631525, 23.481	S
4112	2	8Sec_SciCalib_LaserDiodeTemp(epoch39 - Spare)	N/A	N/A	N/A	U
4114	14	8Sec_SciCalib_LaserDiodeTemp(epoch39)	Polynomial	-, -, 0, 0, 0.00631698, 21.929	-, -, 0, 0, 0.00630896, 22.864	S
4128	2	8Sec_SciCalib_BeamsplitterTemp#1(epoch39 - Spare)	N/A	N/A	N/A	U
4130	14	8Sec_SciCalib_BeamsplitterTemp#1(epoch39)	Polynomial	-, -, 0, 0, 0.00630965, 21.598	-, -, 0, 0, 0.00631155, 23.122	S
4144	2	8Sec_SciCalib_OMAStructureInputTemp#1(epoch39 - Spare)	N/A	N/A	N/A	U
4146	14	8Sec_SciCalib_OMAStructureInputTemp#1(epoch39)	Polynomial	-, -, 0, 0, 0.00631732, 21.886	-, -, 0, 0, 0.00630348, 22.727	S
4160	2	8Sec_SciCalib_OMAStructureInputTemp#2(epoch39 - Spare)	N/A	N/A	N/A	U
4162	14	8Sec_SciCalib_OMAStructureInputTemp#2(epoch39)	Polynomial	-, -, 0, 0, 0.0063153, 21.93	-, -, 0, 0, 0.00631298, 23.021	S
4176	2	8Sec_SciCalib_SSMScanMirrorTemp(epoch39 - Spare)	N/A	N/A	N/A	U
4178	14	8Sec_SciCalib_SSMScanMirrorTemp(epoch39)	N/A	N/A	N/A	S
4192	2	8Sec_SciCalib_SSMScanMirrorBaffleTemp(epoch39 - Spare)	N/A	N/A	N/A	U
4194	14	8Sec_SciCalib_SSMScanMirrorBaffleTemp(epoch39)	Polynomial	-, -, 0, 0, 0.006357116699, 29.02	-, -, 0, 0, 0.006328, 27.49	S
4208	2	8Sec_SciCalib_Stage2CoolerTemp(epoch39 - Spare)	N/A	N/A	N/A	U
4210	14	8Sec_SciCalib_Stage2CoolerTemp(epoch39)	Polynomial	-4.20953E-20, 2.04113E-15, -0.0000000000380786, 0.00000033213, 0.0286777, 70.7661	-4.20953E-20, 2.04113E-15, -0.0000000000380786, 0.00000033213, 0.0286777, 70.7661	S
4224	2	8Sec_SciCalib_Stage4CoolerTemp(epoch39 - Spare)	N/A	N/A	N/A	U
4226	14	8Sec_SciCalib_Stage4CoolerTemp(epoch39)	Polynomial	-, -, 0, 0, 0.0072903872, 33.48383	-, -, 0, 0, 0.0072903872, 33.48383	S
4240	2	8Sec_SciCalib_Stage1CoolerTemp(epoch39 - Spare)	N/A	N/A	N/A	U
4242	14	8Sec_SciCalib_Stage1CoolerTemp(epoch39)	Polynomial	-, -, 0, 0, 0.030142016, 25.544758	-, -, 0, 0, 0.030142016, 25.544758	S
4256	2	8Sec_SciCalib_Stage3CoolerTemp(epoch39 - Spare)	N/A	N/A	N/A	U
4258	14	8Sec_SciCalib_Stage3CoolerTemp(epoch39)	Polynomial	-, -, 0, 0, 0.0098569651, 33.344107	-, -, 0, 0, 0.0098569651, 33.344107	S
4272	2	8Sec_SciCalib_TelescopeTemp#1(epoch39 - Spare)	N/A	N/A	N/A	U
4274	14	8Sec_SciCalib_TelescopeTemp#1(epoch39)	Polynomial	-, -, 0, 0, 1.220703125E-02, 0	-, -, 0, 0, 1.220703125E-02, 0	S
4288	2	8Sec_SciCalib_IECCACalibResistorTemp(epoch40 - Spare)	N/A	N/A	N/A	U
4290	14	8Sec_SciCalib_IECCACalibResistorTemp(epoch40)	Polynomial	-, -, 0, 0, 0.0062985, 21.052	-, -, 0, 0, 0.00632057, 22.89	S

4304	2	8Sec_SciCalib_LowRangeCalibResistor(epoch40 - Spare)	N/A	N/A	N/A	U
4306	14	8Sec_SciCalib_LowRangeCalibResistor(epoch40)	Polynomial	-, -, 0, 0, 0.00632450851228198, 23.6157147848609	-, -, 0, 0, 0.0062993081297153, 23.9436702010479	S
4320	2	8Sec_SciCalib_HighRangeCalibResistor(epoch40 - Spare)	N/A	N/A	N/A	U
4322	14	8Sec_SciCalib_HighRangeCalibResistor(epoch40)	Polynomial	-, -, 0, 0, 0.00632450851228198, 23.6157147848609	-, -, 0, 0, 0.0062993081297153, 23.9436702010479	S
4336	2	8Sec_SciCalib_ICTTemp#1(epoch40 - Spare)	N/A	N/A	N/A	U
4338	14	8Sec_SciCalib_ICTTemp#1(epoch40)	Polynomial	-, -, 0, 0, 0.00629693, 21.475	-, -, 0, 0, 0.00631454, 23.618	S
4352	2	8Sec_SciCalib_ICTTemp#2(epoch40 - Spare)	N/A	N/A	N/A	U
4354	14	8Sec_SciCalib_ICTTemp#2(epoch40)	Polynomial	-, -, 0, 0, 0.00631254, 22.144	-, -, 0, 0, 0.00631525, 23.481	S

4.2.4.3 Engineering Data

The CrIS generates an engineering packet in APID 1290 every 30 scans (or 4 minutes). The extensive contents of this packet include tables of calibration target emissivity versus frequency, Instrument Line Shape (ILS) curve fitting parameters, calibration of the neon source wavelength, polarization change versus wavelength for the Earth Scene and Deep Space FORs, Science/Calibration Telemetry conversion coefficients and limits, field of view mapping parameters, bit trim parameters, jitter correction parameters and neon laser calibration data. The packet has a fixed length of 7730 octets.

CrIS Four Minute Engineering Telemetry Packet **VERSION H** **DATE**

	PACKET PRIMARY HEADER							SECONDARY HEADER	User Data Field														
	Verson No.	Packet Identification			Packet Sequence		Packet Length		CrIS Engineering Data														
		Type Indicator	Sec Hdr Flag	APID	Sequence Flags	Sequence Count		Start of Scan	PCE App FSW Version	Instrument ID	CRC	Packet Format Versiom	Effective Neon Bulb Wavelength	MW & SW Offsets fr LW Wavelength	ILS Fit Curve Parameters	ILS FOV Offset and Size Fit Params	Spare	A2 Linearity Parameters	Detector Preamp Output Voltage (Vinst)	Modulation Efficiency	PGA Hex Gain Seiting to Gain Conversion	subtotal	TOTAL
Bits	3	1	1	11	2	14	16	64	11	5	16	16	32	16	12960	1392	16	864	864	864	768	17936	61840
Octets	2				2		2	8	2		2	2	4	2	1620	174	2	108	108	108	96	2242	7730
Value	000	0	1	0x50A	11	varies	0x1E2B	varies	varies	varies	varies	zeros	varies	varies	varies	varies	zeros	varies	varies	varies	varies		

Telemetry Packet

Secondary Header Present

User Data Field																							
CrIS Engineering Data																							
PGA Hex Gain Setting	FIR Gain Relative to FM1	LW ICT Emissivity Table	MW ICT Emissivity Table	SW ICT Emissivity Table	Polarization Calibration	Polarization Wave Numbers	ICT Environment Model	Spare	Science TLM Conversion Coeff.	Science TLM Limits	Mapping Parameters						LW Bit Trim Mask	MW Bit Trim Mask	LW OPD SW Bit Trim Mask	Spare		Spare	
											SSM cross-track position	SSM Mirrow misalignment	SSM in-track postion	Spare	IM Boresight and SBF Alignments	Time Stamp Bias							
224	96	11408	6928	2544	4464	144	1056	256	1120	224	992	64	32	896	384	16	512	512	512	16	304	48	subtotal 32752
28	12	1426	866	318	558	18	132	32	140	28	124	8	4	112	48	2	64	64	64	2	38	6	4094
varies	varies	varies	varies	varies	varies	varies	varies	zeros	varies	zeros	varies	varies	varies	zeros	varies	varies	varies	varies	varies	varies	varies	varies	

User Data Field																						
CrIS Engineering Data																						
MW OPD Samp Jitter Correction	Spare	SW OPD Samp Jitter Correction	Spare	LW # of A/D Samples	LW decimation and filter taps	MW # of A/D Samples	MW decimation and filter taps	SW # of A/D Samples	SW decimation and filter taps	Spectral Cal Parameters					Neon Cal Sample 1					Neon Cal Samples	
										Laser Pulses per Sweep	# of Neon Cal Sweeps	Effective Neon Wavelength	Neon Cal Time Stamp	Repeat Neon Cal Interval	Neon Cal Start Count	Neon Cal Starting Partial Count	Neon Cal Fringe Count	Neon Cal Ending Partial Count	Neon Cal End Count	Neon Cal Samples 2-128	subtotal
304	48	304	32	16	16	16	16	16	16	16	16	32	48	16	16	16	16	16	16	10160	11152
38	6	38	4	2	2	2	2	2	2	2	2	4	6	2	2	2	2	2	2	1270	1394
varies	varies	varies	varies	varies	varies	varies	varies	varies	varies	varies	varies	varies	varies	varies	varies	varies	varies	varies	varies	varies	

Figure 4.2-11 demonstrates the format of the APID 1290 packet. The corresponding table of user data fields does not contain repeating mnemonics because it would take over 200 pages to do so. Table 4.2.7 contains enough of the unique fields in order to determine where they are repeated. The size of repeated fields is shown. Note that conversion coefficients exist for many of the Science/Calibration mnemonics.

Check the JPSS MIS Server at https://jpssmis.gsfc.nasa.gov/frontmenu_dsp.cfm to verify that this is the correct version prior to use.

CrIS Four Minute Engineering Telemetry Packet **VERSION H** **DATE**

	PACKET PRIMARY HEADER							SECONDARY HEADER	User Data Field														
	Verson No.	Packet Identification			Packet Sequence		Packet Length		CrIS Engineering Data														
		Type Indicator	Sec Hdr Flag	APID	Sequence Flags	Sequence Count		Start of Scan	PCE App FSW Version	Instrument ID	CRC	Packet Format Versiom	Effective Neon Bulb Wavelength	MW & SW Offsets fr LW Wavelength	ILS Fit Curve Parameters	ILS FOV Offset and Size Fit Params	Spare	A2 Linearity Parameters	Detector Preamp Output Voltage (Vinst)	Modulation Efficiency	PGA Hex Gain Seiting to Gain Conversion	subtotal	TOTAL
Bits	3	1	1	11	2	14	16	64	11	5	16	16	32	16	12960	1392	16	864	864	864	768	17936	61840
Octets	2				2		2	8	2		2	2	4	2	1620	174	2	108	108	108	96	2242	7730
Value	000	0	1	0x50A	11	varies	0x1E2B	varies	varies	varies	varies	zeros	varies	varies	varies	varies	zeros	varies	varies	varies	varies		

Telemetry Packet

Secondary Header Present

User Data Field																							
CrIS Engineering Data																							
PGA Hex Gain Setting	FIR Gain Relative to FM1	LW ICT Emissivity Table	MW ICT Emissivity Table	SW ICT Emissivity Table	Polarization Calibration	Polarization Wave Numbers	ICT Environment Model	Spare	Science TLM Conversion Coeff.	Science TLM Limits	Mapping Parameters						LW Bit Trim Mask	MW Bit Trim Mask	LW OPD SW Bit Trim Mask	Spare		Spare	
											SSM cross-track position	SSM Mirrow misalignment	SSM in-track postion	Spare	IM Boresight and SBF Alignments	Time Stamp Bias							
224	96	11408	6928	2544	4464	144	1056	256	1120	224	992	64	32	896	384	16	512	512	512	16	304	48	subtotal 32752
28	12	1426	866	318	558	18	132	32	140	28	124	8	4	112	48	2	64	64	64	2	38	6	4094
varies	varies	varies	varies	varies	varies	varies	varies	zeros	varies	zeros	varies	varies	varies	zeros	varies	varies	varies	varies	varies	varies	varies	varies	

User Data Field																						
CrIS Engineering Data																						
MW OPD Samp Jitter Correction	Spare	SW OPD Samp Jitter Correction	Spare	LW # of A/D Samples	LW decimation and filter taps	MW # of A/D Samples	MW decimation and filter taps	SW # of A/D Samples	SW decimation and filter taps	Spectral Cal Parameters					Neon Cal Sample 1					Neon Cal Samples	
										Laser Pulses per Sweep	# of Neon Cal Sweeps	Effective Neon Wavelength	Neon Cal Time Stamp	Repeat Neon Cal Interval	Neon Cal Start Count	Neon Cal Starting Partial Count	Neon Cal Fringe Count	Neon Cal Ending Partial Count	Neon Cal End Count	Neon Cal Samples 2-128	
304	48	304	32	16	16	16	16	16	16	16	16	32	48	16	16	16	16	16	16	10160	subtotal 11152
38	6	38	4	2	2	2	2	2	2	2	2	4	6	2	2	2	2	2	2	1270	1394
varies	varies	varies	varies	varies	varies	varies	varies	varies	varies	varies	varies	varies	varies	varies	varies	varies	varies	varies	varies	varies	

Figure 4.2-11. CrIS Engineering Packet Format

Check the JPSS MIS Server at https://jpssmis.gsfc.nasa.gov/frontmenu_dsp.cfm to verify that this is the correct version prior to use.

Table 4.2-7. CrIS Engineering Packet User Data Fields

APID (Decimal)	Start Bit	Bit Size	Mnemonic Name	Description	Units or State Value	Conversion Coefficients (formula or C5,C4,C3,C2,C1,C0) or State Name	Data Type
1290	0	11	4Min_Eng_PCEAppFSWVer	PCE Application FSW Version	N/A	N/A	U
1290	11	5	4Min_Eng_InstrumentID	Instrument ID	N/A	N/A	U
1290	16	16	4Min_Eng_CRC	CRC	N/A	N/A	U
1290	32	16	4Min_EngPktFormatVersion	Packet Version #	N/A	N/A	U
1290	48	32	4Min_Eng_EffectiveNeonWavelength	Effective Neon Bulb Wavelength	N/A	0 0 0 8 0.00001 0	U*
1290	80	8	4Min_Eng_MW_Offset_from_LW_Metrology_Laser_Wavelength	Midwave Offset from Longwave Metrology Laser Wavelength	ppm	N/A	U
1290	88	8	4Min_Eng_SW_Offset_from_LW_Metrology_Laser_Wavelength	Shortwave Offset from Longwave Metrology Laser Wavelength	ppm	N/A	U
1290	96	32	4Min_Eng_LW_FOV1_LowerBandC0	Longwave FOV1 Lower Band C0	N/A	N/A	F
1290	128	32	4Min_Eng_LW_FOV1_LowerBandC1	Longwave FOV1 Lower Band C1	N/A	N/A	F
1290	160	32	4Min_Eng_LW_FOV1_LowerBandC2	Longwave FOV1 Lower Band C2	N/A	N/A	F
1290	192	32	4Min_Eng_LW_FOV1_LowerBandC3	Longwave FOV1 Lower Band C3	N/A	N/A	F
1290	224	32	4Min_Eng_LW_FOV1_LowerBandC4	Longwave FOV1 Lower Band C4	N/A	N/A	F
1290	256	32	4Min_Eng_LW_FOV1_UpperBandC0	Longwave FOV1 Upper Band C0	N/A	N/A	F
1290	288	32	4Min_Eng_LW_FOV1_UpperBandC1	Longwave FOV1 Upper Band C1	N/A	N/A	F
1290	320	32	4Min_Eng_LW_FOV1_UpperBandC2	Longwave FOV1 Upper Band C2	N/A	N/A	F
1290	1642	32	4Min_Eng_LW_FOV1_UpperBandC3	Longwave FOV1 Upper Band C3	N/A	N/A	F
1290	384	32	4Min_Eng_LW_FOV1_UpperBandC4	Longwave FOV1 Upper Band C4	N/A	N/A	F
1290	416	32	4Min_Eng_LW_FOV1_MidBandC0	Longwave FOV1 Mid Band C0	N/A	N/A	F
1290	448	32	4Min_Eng_LW_FOV1_MidBandC1	Longwave FOV1 Mid Band C1	N/A	N/A	F
1290	480	32	4Min_Eng_LW_FOV1_MidBandC2	Longwave FOV1 Mid Band C2	N/A	N/A	F
1290	512	32	4Min_Eng_LW_FOV1_MidBandC3	Longwave FOV1 Mid Band C3	N/A	N/A	F
1290	544	32	4Min_Eng_LW_FOV1_MidBandC4	Longwave FOV1 Mid Band C4	N/A	N/A	F
1290	576	480	4Min_Eng_LW_FOV2_*** Band C0 to C4	Longwave, FOV2 Lower, Upper and Mid Band C0-C4	N/A	N/A	F
1290	1056	480	4Min_Eng_LW_FOV3_*** Band C0 to C4	Longwave, FOV3 Lower, Upper and Mid Band C0-C4	N/A	N/A	F
1290	1536	480	4Min_Eng_LW_FOV4_*** Band C0 to C4	Longwave, FOV4 Lower, Upper and Mid Band C0-C4	N/A	N/A	F
1290	2016	480	4Min_Eng_LW_FOV5_*** Band C0 to C4	Longwave, FOV5 Lower, Upper and Mid Band C0-C4	N/A	N/A	F
1290	2496	480	4Min_Eng_LW_FOV6_*** Band C0 to C4	Longwave, FOV6 Lower, Upper and Mid Band C0-C4	N/A	N/A	F
1290	2976	480	4Min_Eng_LW_FOV7_*** Band C0 to C4	Longwave, FOV7 Lower, Upper and Mid Band C0-C4	N/A	N/A	F
1290	3456	480	4Min_Eng_LW_FOV8_*** Band C0 to C4	Longwave, FOV8 Lower, Upper and Mid Band C0-C4	N/A	N/A	F
1290	3936	480	4Min_Eng_LW_FOV9_*** Band C0 to C4	Longwave, FOV9 Lower, Upper and Mid Band C0-C4	N/A	N/A	F
1290	4416	480	4Min_Eng_MW_FOV1_*** Band C0 to C4	Midwave, FOV1 Lower, Upper and Mid Band C0-C4	N/A	N/A	F
1290	4896	480	4Min_Eng_MW_FOV2_*** Band C0 to C4	Midwave, FOV2 Lower, Upper and Mid Band C0-C4	N/A	N/A	F
1290	5376	480	4Min_Eng_MW_FOV3_*** Band C0 to C4	Midwave, FOV3 Lower, Upper and Mid Band C0-C4	N/A	N/A	F
1290	5856	480	4Min_Eng_MW_FOV4_*** Band C0 to C4	Midwave, FOV4 Lower, Upper and Mid Band C0-C4	N/A	N/A	F
1290	6336	480	4Min_Eng_MW_FOV5_*** Band C0 to C4	Midwave, FOV5 Lower, Upper and Mid Band C0-C4	N/A	N/A	F
1290	6816	480	4Min_Eng_MW_FOV6_*** Band C0 to C4	Midwave, FOV6 Lower, Upper and Mid Band C0-C4	N/A	N/A	F
1290	7296	480	4Min_Eng_MW_FOV7_*** Band C0 to C4	Midwave, FOV7 Lower, Upper and Mid Band C0-C4	N/A	N/A	F
1290	7776	480	4Min_Eng_MW_FOV8_*** Band C0 to C4	Midwave, FOV8 Lower, Upper and Mid Band C0-C4	N/A	N/A	F
1290	8256	480	4Min_Eng_MW_FOV9_*** Band C0 to C4	Midwave, FOV9 Lower, Upper and Mid Band C0-C4	N/A	N/A	F
1290	8736	480	4Min_Eng_SW_FOV1_*** Band C0 to C4	Shortwave, FOV1 Lower, Upper and Mid Band C0-C4	N/A	N/A	F
1290	9216	480	4Min_Eng_SW_FOV2_*** Band C0 to C4	Shortwave, FOV2 Lower, Upper and Mid Band C0-C4	N/A	N/A	F
1290	9696	480	4Min_Eng_SW_FOV3_*** Band C0 to C4	Shortwave, FOV3 Lower, Upper and Mid Band C0-C4	N/A	N/A	F
1290	10176	480	4Min_Eng_SW_FOV4_*** Band C0 to C4	Shortwave, FOV4 Lower, Upper and Mid Band C0-C4	N/A	N/A	F
1290	10656	480	4Min_Eng_SW_FOV5_*** Band C0 to C4	Shortwave, FOV5 Lower, Upper and Mid Band C0-C4	N/A	N/A	F
1290	11136	480	4Min_Eng_SW_FOV6_*** Band C0 to C4	Shortwave, FOV6 Lower, Upper and Mid Band C0-C4	N/A	N/A	F
1290	11616	480	4Min_Eng_SW_FOV7_*** Band C0 to C4	Shortwave, FOV7 Lower, Upper and Mid Band C0-C4	N/A	N/A	F
1290	12096	480	4Min_Eng_SW_FOV8_*** Band C0 to C4	Shortwave, FOV8 Lower, Upper and Mid Band C0-C4	N/A	N/A	F
1290	12576	480	4Min_Eng_SW_FOV9_*** Band C0 to C4	Shortwave, FOV9 Lower, Upper and Mid Band C0-C4	N/A	N/A	F

Check the JPSS MIS Server at https://jpssmis.gsfc.nasa.gov/frontmenu_dsp.cfm to verify that this is the correct version prior to use.

APID (Decimal)	Start Bit	Bit Size	Mnemonic Name	Description	Units or State Value	Conversion Coefficients (formula or C5,C4,C3,C2,C1,C0) or State Name	Data Type
1290	13056	16	4Min_Eng_LW_FOV1_CrosstrackOffsetAngle	Longwave FOV1 Crosstrack Offset Angle	N/A	N/A	S
1290	13072	16	4Min_Eng_LW_FOV2_CrosstrackOffsetAngle	Longwave FOV2 Crosstrack Offset Angle	N/A	N/A	S
1290	13088	16	4Min_Eng_LW_FOV3_CrosstrackOffsetAngle	Longwave FOV3 Crosstrack Offset Angle	N/A	N/A	S
1290	13104	16	4Min_Eng_LW_FOV4_CrosstrackOffsetAngle	Longwave FOV4 Crosstrack Offset Angle	N/A	N/A	S
1290	13120	16	4Min_Eng_LW_FOV5_CrosstrackOffsetAngle	Longwave FOV5 Crosstrack Offset Angle	N/A	N/A	S
1290	13136	16	4Min_Eng_LW_FOV6_CrosstrackOffsetAngle	Longwave FOV6 Crosstrack Offset Angle	N/A	N/A	S
1290	13152	16	4Min_Eng_LW_FOV7_CrosstrackOffsetAngle	Longwave FOV7 Crosstrack Offset Angle	N/A	N/A	S
1290	13168	16	4Min_Eng_LW_FOV8_CrosstrackOffsetAngle	Longwave FOV8 Crosstrack Offset Angle	N/A	N/A	S
1290	13184	16	4Min_Eng_LW_FOV9_CrosstrackOffsetAngle	Longwave FOV9 Crosstrack Offset Angle	N/A	N/A	S
1290	13200	16	4Min_Eng_LW_FOV1_IntrackOffsetAngle	Longwave FOV1 Intrack Offset Angle	N/A	N/A	S
1290	13216	16	4Min_Eng_LW_FOV2_IntrackOffsetAngle	Longwave FOV2 Intrack Offset Angle	N/A	N/A	S
1290	13232	16	4Min_Eng_LW_FOV3_IntrackOffsetAngle	Longwave FOV3 Intrack Offset Angle	N/A	N/A	S
1290	13248	16	4Min_Eng_LW_FOV4_IntrackOffsetAngle	Longwave FOV4 Intrack Offset Angle	N/A	N/A	S
1290	13264	16	4Min_Eng_LW_FOV5_IntrackOffsetAngle	Longwave FOV5 Intrack Offset Angle	N/A	N/A	S
1290	13280	16	4Min_Eng_LW_FOV6_IntrackOffsetAngle	Longwave FOV6 Intrack Offset Angle	N/A	N/A	S
1290	13296	16	4Min_Eng_LW_FOV7_IntrackOffsetAngle	Longwave FOV7 Intrack Offset Angle	N/A	N/A	S
1290	13312	16	4Min_Eng_LW_FOV8_IntrackOffsetAngle	Longwave FOV8 Intrack Offset Angle	N/A	N/A	S
1290	13328	16	4Min_Eng_LW_FOV9_IntrackOffsetAngle	Longwave FOV9 Intrack Offset Angle	N/A	N/A	S
1290	13344	16	4Min_Eng_LW_FOV1_Diameter	Longwave FOV1 Diameter	N/A	N/A	U
1290	13360	16	4Min_Eng_LW_FOV2_Diameter	Longwave FOV2 Diameter	N/A	N/A	U
1290	13376	16	4Min_Eng_LW_FOV3_Diameter	Longwave FOV3 Diameter	N/A	N/A	U
1290	13392	16	4Min_Eng_LW_FOV4_Diameter	Longwave FOV4 Diameter	N/A	N/A	U
1290	13408	16	4Min_Eng_LW_FOV5_Diameter	Longwave FOV5 Diameter	N/A	N/A	U
1290	13424	16	4Min_Eng_LW_FOV6_Diameter	Longwave FOV6 Diameter	N/A	N/A	U
1290	13440	16	4Min_Eng_LW_FOV7_Diameter	Longwave FOV7 Diameter	N/A	N/A	U
1290	13456	16	4Min_Eng_LW_FOV8_Diameter	Longwave FOV8 Diameter	N/A	N/A	U
1290	13472	16	4Min_Eng_LW_FOV9_Diameter	Longwave FOV9 Diameter	N/A	N/A	U
1290	13488	16	4Min_Eng_LW_FOV5_CrosstrackMisalignment	Longwave FOV5 Crosstrack Misalignment	N/A	N/A	S
1290	13504	16	4Min_Eng_LW_FOV5_IntrackMisalignment	Longwave FOV5 Intrack Misalignment	N/A	N/A	S
1290	13520	464	varies	Midwave Crosstrack, Intrack Offset Angles, Diameters and Misalignment	N/A	N/A	U/S
1290	13984	464	varies	Shortwave Crosstrack, Intrack Offset Angles, Diameters and Misalignment	N/A	N/A	U/S
1290	14448	16	4Min_Eng_Spare2	Spare2	N/A	N/A	U
1290	14464	864	4Min_Eng_*#_a2	2nd order IR channel nonlinearity characterization parameter for (LW, MW, SW)IR, FOV (1-9) (32 bits each)	1/Volts	N/A	F
1290	15328	864	4Min_Eng_*#_Vinst	Detector preamp output voltage due to instument background radiance and detector dark current only for (LW, MW, SW)IR, FOV (1-9) (32 bits each)	Volts	N/A	F
1290	16192	864	4Min_Eng_*_Modulation_Efficiency	LW, MW, SW 1-9 Modulation Efficiency (32 bits each)	%	N/A	F
1290	17056	768	4Min_Eng_*_PGA_Hex_Setting_#_to_Gain	(LW,MW, SW)IR channel electrical gain in Volt/Volt corresponding to PGA gain setting = (0-F)HEX (16 bits each)	Volt/Volt	0 0 0 4 0.01 0	U*
1290	17824	216	4Min_Eng_*#_PGA_Gain_HEX_Setting	(LW, MW, SW)IR FOV (1-9) PGA Gain Setting commanded to CrIS SP (8 bits each)	N/A	N/A	U
1290	18040	8	4Min_Eng_Spare48	Spare48	N/A	0 0 0 4 1 0	U*
1290	18048	96	4Min_Eng_*_FIR_Gain_Relative_to_FM1	(LW, MW, SW)IR FIR filter coefficient gain relative to baseline FM1_3 FIR filter coefficients. (32 bits each) Excludes gain changes due to bit trim mask changes.	N/A	N/A	U

Check the JPSS MIS Server at https://jpssmis.gsfc.nasa.gov/frontmenu_dsp.cfm to verify that this is the correct version prior to use.

APID (Decimal)	Start Bit	Bit Size	Mnemonic Name	Description	Units or State Value	Conversion Coefficients (formula or C5,C4,C3,C2,C1,C0) or State Name	Data Type
1290	18144	11408	4Min_Eng_LW_Emissivity_*	ICT LW Emissivity from 650.000 cm-1 to 1095.000 cm-1 in 0.625 cm-1 steps (16 bits each)	N/A	0 0 4 0.0001 0	U*
1290	29552	6928	4Min_Eng_MW_Emissivity_*	ICT MW Emissivity from 1210.000 cm-1 to 1750.000 cm-1 in 1.250 cm-1 steps (16 bits each)	N/A	0 0 4 0.0001 0	U*
1290	36480	2544	4Min_Eng_SW_Emissivity_*	ICT SW Emissivity from 2155.000 cm-1 to 2550.000 cm-1 in 2.5 cm-1 steps (16 bits each)	N/A	0 0 4 0.0001 0	U*
1290	39024	144	4Min_Eng_EarthScene1_P#	Polarization Calibration Earth Scene 1, Wavenumber #1-9, (16 bit value per wave#)	N/A	0 0 0 -4 0.001 0	U*
1290	39168	144	4Min_Eng_EarthScene2_P#	Polarization Calibration Earth Scene 2, Wavenumber #1-9, (16 bit value per wave#)	N/A	0 0 0 -4 0.001 0	U*
1290	39312	144	4Min_Eng_EarthScene3_P#	Polarization Calibration Earth Scene 3, Wavenumber #1-9, (16 bit value per wave#)	N/A	0 0 0 -4 0.001 0	U*
1290	39456	144	4Min_Eng_EarthScene4_P#	Polarization Calibration Earth Scene 4, Wavenumber #1-9, (16 bit value per wave#)	N/A	0 0 0 -4 0.001 0	U*
1290	39600	144	4Min_Eng_EarthScene5_P#	Polarization Calibration Earth Scene 5, Wavenumber #1-9, (16 bit value per wave#)	N/A	0 0 0 -4 0.001 0	U*
1290	39744	144	4Min_Eng_EarthScene6_P#	Polarization Calibration Earth Scene 6, Wavenumber #1-9, (16 bit value per wave#)	N/A	0 0 0 -4 0.001 0	U*
1290	39888	144	4Min_Eng_EarthScene7_P#	Polarization Calibration Earth Scene 7, Wavenumber #1-9, (16 bit value per wave#)	N/A	0 0 0 -4 0.001 0	U*
1290	40032	144	4Min_Eng_EarthScene8_P#	Polarization Calibration Earth Scene 8, Wavenumber #1-9, (16 bit value per wave#)	N/A	0 0 0 -4 0.001 0	U*
1290	40176	144	4Min_Eng_EarthScene9_P#	Polarization Calibration Earth Scene 9, Wavenumber #1-9, (16 bit value per wave#)	N/A	0 0 0 -4 0.001 0	U*
1290	40320	144	4Min_Eng_EarthScene10_P#	Polarization Calibration Earth Scene 10, Wavenumber #1-9, (16 bit value per wave#)	N/A	0 0 0 -4 0.001 0	U*
1290	40464	144	4Min_Eng_EarthScene11_P#	Polarization Calibration Earth Scene 11, Wavenumber #1-9, (16 bit value per wave#)	N/A	0 0 0 -4 0.001 0	U*
1290	40608	144	4Min_Eng_EarthScene12_P#	Polarization Calibration Earth Scene 12, Wavenumber #1-9, (16 bit value per wave#)	N/A	0 0 0 -4 0.001 0	U*
1290	40752	144	4Min_Eng_EarthScene13_P#	Polarization Calibration Earth Scene 13, Wavenumber #1-9, (16 bit value per wave#)	N/A	0 0 0 -4 0.001 0	U*
1290	40896	144	4Min_Eng_EarthScene14_P#	Polarization Calibration Earth Scene 14, Wavenumber #1-9, (16 bit value per wave#)	N/A	0 0 0 -4 0.001 0	U*
1290	41040	144	4Min_Eng_EarthScene15_P#	Polarization Calibration Earth Scene 15, Wavenumber #1-9, (16 bit value per wave#)	N/A	0 0 0 -4 0.001 0	U*
1290	41184	144	4Min_Eng_EarthScene16_P#	Polarization Calibration Earth Scene 16, Wavenumber #1-9, (16 bit value per wave#)	N/A	0 0 0 -4 0.001 0	U*
1290	41328	144	4Min_Eng_EarthScene17_P#	Polarization Calibration Earth Scene 17, Wavenumber #1-9, (16 bit value per wave#)	N/A	0 0 0 -4 0.001 0	U*
1290	41472	144	4Min_Eng_EarthScene18_P#	Polarization Calibration Earth Scene 18, Wavenumber #1-9, (16 bit value per wave#)	N/A	0 0 0 -4 0.001 0	U*
1290	41616	144	4Min_Eng_EarthScene19_P#	Polarization Calibration Earth Scene 19, Wavenumber #1-9, (16 bit value per wave#)	N/A	0 0 0 -4 0.001 0	U*
1290	41760	144	4Min_Eng_EarthScene20_P#	Polarization Calibration Earth Scene 20, Wavenumber #1-9, (16 bit value per wave#)	N/A	0 0 0 -4 0.001 0	U*
1290	41904	144	4Min_Eng_EarthScene21_P#	Polarization Calibration Earth Scene 21, Wavenumber #1-9, (16 bit value per wave#)	N/A	0 0 0 -4 0.001 0	U*
1290	42048	144	4Min_Eng_EarthScene22_P#	Polarization Calibration Earth Scene 22, Wavenumber #1-9, (16 bit value per wave#)	N/A	0 0 0 -4 0.001 0	U*
1290	42192	144	4Min_Eng_EarthScene23_P#	Polarization Calibration Earth Scene 23, Wavenumber #1-9, (16 bit value per wave#)	N/A	0 0 0 -4 0.001 0	U*
1290	42336	144	4Min_Eng_EarthScene24_P#	Polarization Calibration Earth Scene 24, Wavenumber #1-9, (16 bit value per wave#)	N/A	0 0 0 -4 0.001 0	U*
1290	42480	144	4Min_Eng_EarthScene25_P#	Polarization Calibration Earth Scene 25, Wavenumber #1-9, (16 bit value per wave#)	N/A	0 0 0 -4 0.001 0	U*
1290	42624	144	4Min_Eng_EarthScene26_P#	Polarization Calibration Earth Scene 26, Wavenumber #1-9, (16 bit value per wave#)	N/A	0 0 0 -4 0.001 0	U*
1290	42768	144	4Min_Eng_EarthScene27_P#	Polarization Calibration Earth Scene 27, Wavenumber #1-9, (16 bit value per wave#)	N/A	0 0 0 -4 0.001 0	U*
1290	42912	144	4Min_Eng_EarthScene28_P#	Polarization Calibration Earth Scene 28, Wavenumber #1-9, (16 bit value per wave#)	N/A	0 0 0 -4 0.001 0	U*
1290	43056	144	4Min_Eng_EarthScene29_P#	Polarization Calibration Earth Scene 29, Wavenumber #1-9, (16 bit value per wave#)	N/A	0 0 0 -4 0.001 0	U*
1290	43200	144	4Min_Eng_EarthScene30_P#	Polarization Calibration Earth Scene 30, Wavenumber #1-9, (16 bit value per wave#)	N/A	0 0 0 -4 0.001 0	U*
1290	43344	144	4Min_Eng_DeepSpaceScene31_P#	Polarization Calibration Deep Space Scene #31, Wavenumber #1-9, (16 bit value per wave#)	N/A	0 0 0 -4 0.001 0	U*
1290	43488	144	4Min_Eng_W#_*WP#	Polarization Wavenumbers 1-9 (16 bits each)	N/A	0 0 0 4 1 0	U*
1290	43632	16	4Min_Eng_ScanMirror_Emissivity(LW band)	LW ScanMirror Emissivity	-	0 0 4 0.001 0	U*
1290	43648	16	4Min_Eng_ScanMirror_Emissivity(MW band)	MW ScanMirror Emissivity	-	0 0 4 0.001 0	U*
1290	43664	16	4Min_Eng_ScanMirror_Emissivity(SW band)	SW ScanMirror Emissivity	-	0 0 4 0.001 0	U*
1290	43680	16	4Min_Eng_ScanBaffle_Emissivity(LW band)	LW ScanBaffle Emissivity	-	0 0 4 0.001 0	U*
1290	43696	16	4Min_Eng_ScanBaffle_Emissivity(MW band)	MW ScanBaffle Emissivity	-	0 0 4 0.001 0	U*
1290	43712	16	4Min_Eng_ScanBaffle_Emissivity(SW band)	SW ScanBaffle Emissivity	-	0 0 4 0.001 0	U*
1290	43728	16	4Min_Eng_InterferometerHousing_Emissivity(LW band)	LW Interferometer Housing Emissivity	-	0 0 4 0.001 0	U*
1290	43744	16	4Min_Eng_InterferometerHousing_Emissivity(MW band)	MW Interferometer Housing Emissivity	-	0 0 4 0.001 0	U*
1290	43760	16	4Min_Eng_InterferometerHousing_Emissivity(SW band)	SW Interferometer Housing Emissivity	-	0 0 4 0.001 0	U*
1290	43776	16	4Min_Eng_LW_ICT_Baffle_emissivity	Emissivity of ICT baffle in LWIR	-	0 0 4 0.001 0	U*
1290	43792	16	4Min_Eng_MW_ICT_Baffle_emissivity	Emissivity of ICT baffle in MWIR	-	0 0 4 0.001 0	U*
1290	43808	16	4Min_Eng_SW_ICT_Baffle_emissivity	Emissivity of ICT baffle in SWIR	-	0 0 4 0.001 0	U*
1290	43824	16	4Min_Eng_LW_Avg_Earth_emissivity	Approximate emissivity of earth view in LWIR		0 0 4 0.001 0	U*
1290	43840	16	4Min_Eng_MW_Avg_Earth_emissivity	Approximate emissivity of earth view in MWIR		0 0 4 0.001 0	U*
1290	43856	16	4Min_Eng_SW_Avg_Earth_emissivity	Approximate emissivity of earth view in SWIR		0 0 4 0.001 0	U*

Check the JPSS MIS Server at https://jpssmis.gsfc.nasa.gov/frontmenu_dsp.cfm to verify that this is the correct version prior to use.

Start Bit	Bit Size	Mnemonic Name	Description	Units or State Value	Conversion Coefficients (formula or C5,C4,C3,C2,C1,C0) or State Name	Data Type
43872	16	4Min_Eng_Warm_Beamsplitter_View_Factor	Fractional environment view of external ICT environment from ICT bottom surface to the warm portion of the beamsplitter	-	0 0 4 0.001 0	U*
43888	16	4Min_Eng_Cold_Beamsplitter_View_Factor	Fractional environment view of external ICT environment from ICT bottom surface to the cold portion of the beamsplitter	-	0 0 4 0.001 0	U*
43904	16	4Min_Eng_Scan_Baffle_View_Factor	Fractional environment view of external ICT environment from ICT bottom surface to the SSM scan baffle	-	0 0 4 0.001 0	U*
43920	16	4Min_Eng_ICT_Baffle_View_Factor	Fractional environment view of external ICT environment from ICT bottom surface to the ICT baffle	-	0 0 4 0.001 0	U*
43936	16	4Min_Eng_OMA_and_Frame_View_Factor	Fractional environment view of external ICT environment from ICT bottom surface to OMA housing and frame	-	0 0 4 0.001 0	U*
43952	16	4Min_Eng_Space_View_Factor	Fractional environment view of external ICT environment from ICT bottom surface to OMA housing and frame	-	0 0 4 0.001 0	U*
43968	32	4Min_Eng_Earth_Temperature	Average earth temperature for calculatin the ICT reflected radiance from the space view	K	N/A	F
44000	32	4Min_Eng_Scan_Baffle_Temperature_Orbit_Correction_(Pt #1)	Scan baffle temperature correction applied at spacecraft orbit lattitude of 90 degree (North Pole)	K	N/A	F
44032	32	4Min_Eng_Scan_Baffle_Temperature_Orbit_Correction_(Pt #2)	Scan baffle temperature correction applied at spacecraft orbit lattitude of 72.86 degree (dark side of earth)	K	N/A	F
44064	32	4Min_Eng_Scan_Baffle_Temperature_Orbit_Correction_(Pt #3)	Scan baffle temperature correction applied at spacecraft orbit lattitude of 55.71 degree (dark side of earth)	K	N/A	F
44096	32	4Min_Eng_Scan_Baffle_Temperature_Orbit_Correction_(Pt #4)	Scan baffle temperature correction applied at spacecraft orbit lattitude of 38.57 degree (dark side of earth)	K	N/A	F
44128	32	4Min_Eng_Scan_Baffle_Temperature_Orbit_Correction_(Pt #5)	Scan baffle temperature correction applied at spacecraft orbit lattitude of 21.43 degree (dark side of earth)	K	N/A	F
44160	32	4Min_Eng_Scan_Baffle_Temperature_Orbit_Correction_(Pt #6)	Scan baffle temperature correction applied at spacecraft orbit lattitude of 4.29 degree (dark side of earth)	K	N/A	F
44192	32	4Min_Eng_Scan_Baffle_Temperature_Orbit_Correction_(Pt #7)	Scan baffle temperature correction applied at spacecraft orbit lattitude of -12.86 degree (dark side of earth)	K	N/A	F
44224	32	4Min_Eng_Scan_Baffle_Temperature_Orbit_Correction_(Pt #8)	Scan baffle temperature correction applied at spacecraft orbit lattitude of -30.00 degree (dark side of earth)	K	N/A	F
44256	32	4Min_Eng_Scan_Baffle_Temperature_Orbit_Correction_(Pt #9)	Scan baffle temperature correction applied at spacecraft orbit lattitude of -47.14 degree (dark side of earth)	K	N/A	F
44288	32	4Min_Eng_Scan_Baffle_Temperature_Orbit_Correction_(Pt #10)	Scan baffle temperature correction applied at spacecraft orbit lattitude of -64.29 degree (dark side of earth)	K	N/A	F
44320	32	4Min_Eng_Scan_Baffle_Temperature_Orbit_Correction_(Pt #11)	Scan baffle temperature correction applied at spacecraft orbit lattitude of -81.43 degree (dark side of earth)	K	N/A	F
44352	32	4Min_Eng_Scan_Baffle_Temperature_Orbit_Correction_(Pt #12)	Scan baffle temperature correction applied at spacecraft orbit lattitude of -81.43 degree (sun side of earth)	K	N/A	F
44384	32	4Min_Eng_Scan_Baffle_Temperature_Orbit_Correction_(Pt #13)	Scan baffle temperature correction applied at spacecraft orbit lattitude of -64.29 degree (sun side of earth)	K	N/A	F
44416	32	4Min_Eng_Scan_Baffle_Temperature_Orbit_Correction_(Pt #14)	Scan baffle temperature correction applied at spacecraft orbit lattitude of -47.14 degree (sun side of earth)	K	N/A	F
44448	32	4Min_Eng_Scan_Baffle_Temperature_Orbit_Correction_(Pt #15)	Scan baffle temperature correction applied at spacecraft orbit lattitude of -30.00 degree (sun side of earth)	K	N/A	F
44480	32	4Min_Eng_Scan_Baffle_Temperature_Orbit_Correction_(Pt #16)	Scan baffle temperature correction applied at spacecraft orbit lattitude of -12.86 degree (sun side of earth)	K	N/A	F
44512	32	4Min_Eng_Scan_Baffle_Temperature_Orbit_Correction_(Pt #17)	Scan baffle temperature correction applied at spacecraft orbit lattitude of 4.29 degree (sun side of earth)	K	N/A	F
44544	32	4Min_Eng_Scan_Baffle_Temperature_Orbit_Correction_(Pt #18)	Scan baffle temperature correction applied at spacecraft orbit lattitude of 21.43 degree (sun side of earth)	K	N/A	F
44576	32	4Min_Eng_Scan_Baffle_Temperature_Orbit_Correction_(Pt #19)	Scan baffle temperature correction applied at spacecraft orbit lattitude of 38.57 degree (sun side of earth)	K	N/A	F
44608	32	4Min_Eng_Scan_Baffle_Temperature_Orbit_Correction_(Pt #20)	Scan baffle temperature correction applied at spacecraft orbit lattitude of 55.71 degree (sun side of earth)	K	N/A	F
44640	32	4Min_Eng_Scan_Baffle_Temperature_Orbit_Correction_(Pt #21)	Scan baffle temperature correction applied at spacecraft orbit lattitude of 72.86 degree (sun side of earth)	K	N/A	F
44672	16	4Min_Eng_Orbital_Period	CrIS orbital period in seconds used for implementing the scan baffle temperature correction in the ICT enviornmental model.	Sec	N/A	U
44688	16	4Min_Eng_Spare32	Spare32	N/A	N/A	U
44704	16	4Min_Eng_Spare33	Spare33	N/A	N/A	U
44720	16	4Min_Eng_Spare34	Spare34	N/A	N/A	U
44736	16	4Min_Eng_Spare35	Spare35	N/A	N/A	U
44752	16	4Min_Eng_Spare36	Spare36	N/A	N/A	U
44768	16	4Min_Eng_Spare37	Spare37	N/A	N/A	U
44784	16	4Min_Eng_Spare38	Spare38	N/A	N/A	U
44800	16	4Min_Eng_Spare39	Spare39	N/A	N/A	U
44816	16	4Min_Eng_Spare40	Spare40	N/A	N/A	U
44832	16	4Min_Eng_Spare41	Spare41	N/A	N/A	U
44848	16	4Min_Eng_Spare42	Spare42	N/A	N/A	U
44864	16	4Min_Eng_Spare43	Spare43	N/A	N/A	U
44880	16	4Min_Eng_Spare44	Spare44	N/A	N/A	U
44896	16	4Min_Eng_Spare45	Spare45	N/A	N/A	U
44912	16	4Min_Eng_Spare46	Spare46	N/A	N/A	U
44928	16	4Min_Eng_Spare47	Spare47	N/A	N/A	U

Start Bit	Bit Size	Mnemonic Name	Description	Units or State Value	Conversion Coefficients (formula or C5,C4,C3,C2,C1,C0) or State Name	Data Type
44944	32	4Min_Eng_ICTPRT1_Coeff_Ro	ICTPRT1 Coeff Ro	N/A	N/A	F
44976	32	4Min_Eng_ICTPRT1_Coeff_a	ICTPRT1 Coeff a	N/A	N/A	F
45008	32	4Min_Eng_ICTPRT1_Coeff_b	ICTPRT1 Coeff b	N/A	N/A	F
45040	32	4Min_Eng_ICTPRT2_Coeff_Ro	ICTPRT2 Coeff Ro	N/A	N/A	F
45072	32	4Min_Eng_ICTPRT2_Coeff_a	ICTPRT2 Coeff a	N/A	N/A	F
45104	32	4Min_Eng_ICTPRT2_Coeff_b	ICTPRT2 Coeff b	N/A	N/A	F
45136	32	4Min_Eng_ICTLowRange_CalibrationResistor_Ro	ICT Low Range CalibrationResistor Ro	N/A	N/A	F
45168	32	4Min_Eng_ICTLowRange_CalibrationResistor_a	ICT Low Range Calibration Resistor a	N/A	N/A	F
45200	32	4Min_Eng_ICTHighRange_CalibrationResistor_Ro	ICT High Range Calibration Resistor Ro	N/A	N/A	F
45232	32	4Min_Eng_ICTHighRange_CalibrationResistor_a	ICT High Range Calibration Resistor a	N/A	N/A	F
45264	32	4Min_Eng_IECCA_ResistorTemperature_Ro	IECCA Resistor Temperature Ro	N/A	N/A	F
45296	32	4Min_Eng_IECCA_ResistorTemperature_a	IECCA Resistor Temperature a	N/A	N/A	F
45328	32	4Min_Eng_LaserDiode_TemperatureSlope	Laser Diode Temperature Slope	N/A	N/A	F
45360	32	4Min_Eng_LaserDiodeBias_CurrentSlope	Laser Diode Bias Current Slope	N/A	N/A	F
45392	32	4Min_Eng_Beamsplitter_Temperature1Coeff_intercept	Beamsplitter Temp1 Coeff intercept	N/A	N/A	F
45424	32	4Min_Eng_Beamsplitter_Temperature1Coeff_slope	Beamsplitter Temp1 Coeff slope	N/A	N/A	F
45456	32	4Min_Eng_Spare8	Spare8	N/A	N/A	U
45488	32	4Min_Eng_Spare9	Spare9	N/A	N/A	U
45520	32	4Min_Eng_ScanMirror_TemperatureCoeff_intercept	Scan Mirror Temperature Coeff intercept	N/A	N/A	F
45552	32	4Min_Eng_ScanMirror_TemperatureCoeff_slope	Scan Mirror Temperature Coeff slope	N/A	N/A	F
45584	32	4Min_Eng_ScanBaffle_TemperatureCoeff_intercept	Scan Baffle Temperature Coeff intercept	N/A	N/A	F
45616	32	4Min_Eng_ScanBaffle_TemperatureCoeff_slope	Scan Baffle Temperature Coeff slope	N/A	N/A	F
45648	32	4Min_Eng_OMA_StructureTemperature1Coeff_intercept	OMA Struct Temperature1 Coeff intercept	N/A	N/A	F
45680	32	4Min_Eng_OMA_StructureTemperature1Coeff_slope	OMA Struct Temperature1 Coeff slope	N/A	N/A	F
45712	32	4Min_Eng_OMA_StructureTemperature2Coeff_intercept	OMA Struct Temperature2 Coeff intercept	N/A	N/A	F
45744	32	4Min_Eng_OMA_StructureTemperature2Coeff_slope	OMA Struct Temperature2 Coeff slope	N/A	N/A	F
45776	32	4Min_Eng_Telescope_TemperatureCoeff_slope	Telescope Temperature Coeff slope	N/A	N/A	F
45808	32	4Min_Eng_Stage1_CoolerTempCoeff_slope	Stage1 Cooler Temperature Coeff slope	N/A	N/A	F
45840	32	4Min_Eng_Stage2_CoolerTempCoeff_slope	Stage2 Cooler Temperature Coeff slope	N/A	N/A	F
45872	32	4Min_Eng_Stage3_CoolerTempCoeff_slope	Stage3 Cooler Temperature Coeff slope	N/A	N/A	F
45904	32	4Min_Eng_Stage4_CoolerTempCoeff_slope	Stage4 Cooler Temperature Coeff slope	N/A	N/A	F
45936	32	4Min_Eng_SSM_CrosstrackErrorCoeff_intercept	SSM Crosstrack Error Coeff intercept	N/A	N/A	F
45968	32	4Min_Eng_SSM_CrosstrackErrorCoeff_slope	SSM Crosstrack Error Coeff slope	N/A	N/A	F
46000	32	4Min_Eng_SSM_IntrackErrorCoeff_intercept	SSM Intrack Error Coeff intercept	N/A	N/A	F
46032	32	4Min_Eng_SSM_IntrackErrorCoeff_slope	SSM Intrack Error Coeff slope	N/A	N/A	F
46064	16	4Min_Eng_ICT_Temp1DriftLimit	ICT Temperature1 Drift Limit	N/A	0 0 4 0.001 0	U*
46080	16	4Min_Eng_ICT_Temp2DriftLimit	ICT Temperature2 Drift Limit	N/A	0 0 4 0.001 0	U*
46096	16	4Min_Eng_Beamsplitter_Temp1DriftLimit	Beamsplitter Temperature1 Drift Limit	N/A	0 0 4 0.001 0	U*
46112	16	4Min_Eng_Spare12	Spare12	N/A	0 0 4 0.001 0	U*
46128	16	4Min_Eng_ScanMirror_TempDriftLimit	Scan Mirror Temperature Drift Limit	N/A	0 0 4 0.001 0	U*
46144	16	4Min_Eng_ScanBaffle_TempDriftLimit	Scan Baffle Temperature Drift Limit	N/A	0 0 4 0.001 0	U*
46160	16	4Min_Eng_OMA_Structure1TempDriftLimit	OMA Structure1 Temperature Drift Limit	N/A	0 0 4 0.001 0	U*
46176	16	4Min_Eng_OMA_Structure2TempDriftLimit	OMA Structure2 Temperature Drift Limit	N/A	0 0 4 0.001 0	U*
46192	16	4Min_Eng_Telescope_TempDriftLimit	Telescope Temperature Drift Limit	N/A	0 0 4 0.001 0	U*

Check the JPSS MIS Server at https://jpssmis.gsfc.nasa.gov/frontmenu_dsp.cfm to verify that this is the correct version prior to use.

Start Bit	Bit Size	Mnemonic Name	Description	Units or State Value	Conversion Coefficients (formula or C5,C4,C3,C2,C1,C0) or State Name	Data Type
46208	16	4Min_Eng_Stage1_CoolerTempDriftLimit	Stage1 Cooler Temperature Drift Limit	N/A	0 0 4 0.001 0	U*
46224	16	4Min_Eng_Stage2_CoolerTempDriftLimit	Stage2 Cooler Temperature Drift Limit	N/A	0 0 4 0.001 0	U*
46240	16	4Min_Eng_Stage3_CoolerTempDriftLimit	Stage3 Cooler Temperature Drift Limit	N/A	0 0 4 0.001 0	U*
46256	16	4Min_Eng_Stage4_CoolerTempDriftLimit	Stage4 Cooler Temperature Drift Limit	N/A	0 0 4 0.001 0	U*
46272	16	4Min_Eng_LaserDiode_WavelengthDriftLimit	Laser Diode Wavelength Drift Limit	N/A	0 0 4 0.001 0	U*
46288	992	4Min_Eng_ActualCrosstrackAngleRoll_EarthPos#	Actual CrTrk Angle Roll Earth Pos# (#=1-30, 33) 32 bits per Angle	N/A	N/A	U
47280	992	4Min_Eng_ActualIntrackAnglePitch_EarthPos#	Actual InTrk Angle Pitch Earth Pos#(#=1-30, 33) 32 bits per Angle	N/A	N/A	U
48272	32	4Min_Eng_SSMR_to_SSMFAngle_Roll	SSMR to SSMF Angle Roll	N/A	N/A	U
48304	32	4Min_Eng_SSMR_to_SSMFAngle_Pitch	SSMR to SSMF Angle Pitch	N/A	N/A	U
48336	32	4Min_Eng_SSMR_to_SSMFAngle_Yaw	SSMR to SSMF Angle Yaw	N/A	N/A	U
48368	32	4Min_Eng_Spare69	Spare69	N/A	N/A	U
48400	32	4Min_Eng_IAR_to_SSMRAngle_Roll	IAR to SSMR Angle Roll	N/A	N/A	U
48432	32	4Min_Eng_IAR_to_SSMRAngle_Pitch	IAR to SSMR Angle Pitch	N/A	N/A	U
48464	32	4Min_Eng_IAR_to_SSMRAngle_Yaw	IAR to SSMR Angle Yaw	N/A	N/A	U
48496	32	4Min_Eng_InterferometerBorsight_Yaw	Interferometer Borsight Yaw	N/A	N/A	U
48528	32	4Min_Eng_InterferometerBorsight_Pitch	Interferometer Borsight Pitch	N/A	N/A	U
48560	32	4Min_Eng_SBF_to_IARAngle_Roll	SBF to IAR Angle Roll	N/A	N/A	U
48592	32	4Min_Eng_SBF_to_IARAngle_Pitch	SBF to IAR Angle Pitch	N/A	N/A	U
48624	32	4Min_Eng_SBF_to_IARAngle_Yaw	SBF to IAR Angle Yaw	N/A	N/A	U
48656	16	4Min_Eng_TimestampBias	Timestamp Bias	N/A	N/A	U
48672	8	4Min_Eng_LW_FIRAccumulator_StopBit(Zone0)	LW FIR Accumulator Stop Bit - Zone0	N/A	N/A	U
48680	8	4Min_Eng_LW_FIRAccumulator_StartBit(Zone0)	LW FIR Accumulator Start Bit - Zone0	N/A	N/A	U
48688	16	4Min_Eng_LW_EndSampleIndex(Zone0)	LW End Sample Index - Zone0	N/A	N/A	U
48704	32	4Min_Eng_LW_*varies*(Zone1)	LW FIR Accumulator Stop, Start Bit & End Sample Index - Zone1	N/A	N/A	U
48736	32	4Min_Eng_LW_*varies*(Zone2)	LW FIR Accumulator Stop, Start Bit & End Sample Index - Zone2	N/A	N/A	U
48768	32	4Min_Eng_LW_*varies*(Zone3)	LW FIR Accumulator Stop, Start Bit & End Sample Index - Zone3	N/A	N/A	U
48800	32	4Min_Eng_LW_*varies*(Zone4)	LW FIR Accumulator Stop, Start Bit & End Sample Index - Zone4	N/A	N/A	U
48832	32	4Min_Eng_LW_*varies*(Zone5)	LW FIR Accumulator Stop, Start Bit & End Sample Index - Zone5	N/A	N/A	U
48864	32	4Min_Eng_LW_*varies*(Zone6)	LW FIR Accumulator Stop, Start Bit & End Sample Index - Zone6	N/A	N/A	U
48896	32	4Min_Eng_LW_*varies*(Zone7)	LW FIR Accumulator Stop, Start Bit & End Sample Index - Zone7	N/A	N/A	U
48928	32	4Min_Eng_LW_*varies*(Zone8)	LW FIR Accumulator Stop, Start Bit & End Sample Index - Zone8	N/A	N/A	U
48960	32	4Min_Eng_LW_*varies*(Zone9)	LW FIR Accumulator Stop, Start Bit & End Sample Index - Zone9	N/A	N/A	U
48992	32	4Min_Eng_LW_*varies*(Zone10)	LW FIR Accumulator Stop, Start Bit & End Sample Index - Zone10	N/A	N/A	U
49024	32	4Min_Eng_LW_*varies*(Zone11)	LW FIR Accumulator Stop, Start Bit & End Sample Index - Zone11	N/A	N/A	U
49056	32	4Min_Eng_LW_*varies*(Zone12)	LW FIR Accumulator Stop, Start Bit & End Sample Index - Zone12	N/A	N/A	U
49088	32	4Min_Eng_LW_*varies*(Zone13)	LW FIR Accumulator Stop, Start Bit & End Sample Index - Zone13	N/A	N/A	U
49120	32	4Min_Eng_LW_*varies*(Zone14)	LW FIR Accumulator Stop, Start Bit & End Sample Index - Zone14	N/A	N/A	U
49152	32	4Min_Eng_LW_*varies*(Zone15)	LW FIR Accumulator Stop, Start Bit & End Sample Index - Zone15	N/A	N/A	U
49184	512	4Min_Eng_MW_*varies*(Zone ##)	MW FIR Accumulator Stop, Start Bit & End Sample Index - Zones 0-15	N/A	N/A	U
49696	512	4Min_Eng_SW_*varies*(Zone ##)	SW FIR Accumulator Stop, Start Bit & End Sample Index - Zones 0-15	N/A	N/A	U
50208	16	4Min_Eng_Spare70	Spare70	N/A	N/A	U

Check the JPSS MIS Server at https://jpssmis.gsfc.nasa.gov/frontmenu_dsp.cfm to verify that this is the correct version prior to use.

Start Bit	Bit Size	Mnemonic Name	Description	Units or State Value	Conversion Coefficients (formula or C5,C4,C3,C2,C1,C0) or State Name	Data Type
50224	16	4Min_Eng_LWK1Constant	Longwave K1 Constant	N/A	N/A	S
50240	16	4Min_Eng_LWb1Constant	Longwave b1 Constant	N/A	N/A	S
50256	16	4Min_Eng_LWa1Constant	Longwave a1 Constant	N/A	N/A	S
50272	16	4Min_Eng_LWb2Constant	Longwave b2 Constant	N/A	N/A	S
50288	16	4Min_Eng_LWa2Constant	Longwave a2 Constant	N/A	N/A	S
50304	16	4Min_Eng_LWb3Constant	Longwave b3 Constant	N/A	N/A	S
50320	16	4Min_Eng_LWa3Constant	Longwave a3 Constant	N/A	N/A	S
50336	16	4Min_Eng_LWb4Constant	Longwave b4 Constant	N/A	N/A	S
50352	16	4Min_Eng_LWa4Constant	Longwave a4 Constant	N/A	N/A	S
50368	16	4Min_Eng_LWb5Constant	Longwave b5 Constant	N/A	N/A	S
50384	16	4Min_Eng_LWa5Constant	Longwave a5 Constant	N/A	N/A	S
50400	16	4Min_Eng_LWb6Constant	Longwave b6 Constant	N/A	N/A	S
50416	16	4Min_Eng_LWa6Constant	Longwave a6 Constant	N/A	N/A	S
50432	16	4Min_Eng_LWb7Constant	Longwave b7 Constant	N/A	N/A	S
50448	16	4Min_Eng_LWa7Constant	Longwave a7 Constant	N/A	N/A	S
50464	16	4Min_Eng_LWb8Constant	Longwave b8 Constant	N/A	N/A	S
50480	16	4Min_Eng_LWa8Constant	Longwave a8 Constant	N/A	N/A	S
50496	16	4Min_Eng_LWb9Constant	Longwave b9 Constant	N/A	N/A	S
50512	16	4Min_Eng_LWa9Constant	Longwave a9 Constant	N/A	N/A	S
50528	16	4Min_Eng_Spare71	Spare71	N/A	N/A	U
50544	16	4Min_Eng_Spare72	Spare72	N/A	N/A	U
50560	16	4Min_Eng_Spare73	Spare73	N/A	N/A	U
50576	304	4Min_Eng_MW**Constant	Midwave K#, b#, a# Constants	N/A	N/A	S
50880	48	4Min_Eng_Spare74 to 76	Spare74, Spare75, Spare 76	N/A	N/A	U
50928	304	4Min_Eng_SW**Constant	Shortwave K#, b#, a# Constants	N/A	N/A	S
51232	32	4Min_Eng_Spare77 to 78	Spare77, Spare78	N/A	N/A	U
51264	16	4Min_Eng_LW_ExtractionInfo(Raw A/D Samples)	LW Extraction Info(Raw A/D Samples)	N/A	N/A	U
51280	3	4Min_Eng_LW_ExtractionInfo(Spare)	LW Extraction Info(Spare)	N/A	N/A	U
51283	5	4Min_Eng_LW_ExtractionInfo(DecimationRate)	LW Extraction Info(DecimationRate)	N/A	N/A	U
51288	8	4Min_Eng_LW_ExtractionInfo(NumTaps)	LW Extraction Info(NumTaps)	N/A	N/A	U
51296	16	4Min_Eng_MW_ExtractionInfo(Raw A/D Samples)	MW Extraction Info(Raw A/D Samples)	N/A	N/A	U
51312	3	4Min_Eng_MW_ExtractionInfo(Spare)	MW Extraction Info(Spare)	N/A	N/A	U
51315	5	4Min_Eng_MW_ExtractionInfo(DecimationRate)	MW Extraction Info(DecimationRate)	N/A	N/A	U
51320	8	4Min_Eng_MW_ExtractionInfo(NumTaps)	MW Extraction Info(NumTaps)	N/A	N/A	U
51328	16	4Min_Eng_SW_ExtractionInfo(Raw A/D Samples)	SW Extraction Info(Raw A/D Samples)	N/A	N/A	U
51344	3	4Min_Eng_SW_ExtractionInfo(Spare)	SW Extraction Info(Spare)	N/A	N/A	U
51347	5	4Min_Eng_SW_ExtractionInfo(DecimationRate)	SW Extraction Info(DecimationRate)	N/A	N/A	U
51352	8	4Min_Eng_SW_ExtractionInfo(NumTaps)	SW Extraction Info(NumTaps)	N/A	N/A	U
51360	16	4Min_Eng_LaserMetrology_PulsesPerSweep	Laser Metrology Pulses Per Sweep	N/A	N/A	U
51376	16	4Min_Eng_NumberOfNeonCalSweeps	Number Of Neon Cal Sweeps	N/A	N/A	U
51392	32	4Min_Eng_NeonGasWavelength	Neon Gas Wavelength	N/A	0 0 0 8 0.00001 0	U*
51424	16	4Min_Eng_NeonCalTimestamp(Days)	Neon Cal Timestamp - Days	N/A	N/A	U
51440	32	4Min_Eng_NeonCalTimestamp_Milliseconds	Neon Cal Timestamp - Milliseconds	N/A	N/A	U
51472	16	4Min_Eng_NeonCalRepeatTimeInterval	Neon Cal Repeat Time Interval	N/A	N/A	U
51488	16	4Min_Eng_NeonCalStartingCnt(Sample1)	Neon Cal Starting Count - Sample1	N/A	0 0 0 1 0	U
51504	16	4Min_Eng_NeonCalStartingPartialCnt(Sample1)	Neon Cal Starting Partial Count - Sample1	N/A	0 0 0 1 0	U
51520	16	4Min_Eng_NeonCalFringeCnt(Sample1)	Neon Cal Fringe Count - Sample1	N/A	0 0 0 1 0	U
51536	16	4Min_Eng_NeonCalEndPartialCnt(Sample1)	Neon Cal End Partial Count - Sample1	N/A	0 0 0 1 0	U
51552	16	4Min_Eng_NeonCalEndCnt(Sample1)	Neon Cal End Count - Sample1	N/A	0 0 0 1 0	U
51568	10160	4Min_Eng_NeonCal*varies*(Sample#)	Neon Calibration Counts -- Sample 2 to 128 (127 x 5 x 16 bits)	N/A	0 0 0 1 0	U

Check the JPSS MIS Server at https://jpssmis.gsfc.nasa.gov/frontmenu_dsp.cfm to verify that this is the correct version prior to use.

4.2.4.4 Diagnostic Data

The CrIS generates high resolution interferograms when in Diagnostic Mode. Because the sampling of the interferogram is much finer, the CrIS limits its Diagnostic data output to one FOV per FOR. Operators select which FOV via command; the selection is reflected in the Diagnostic Mode Channel Select field of the Filter Status Word within the packet. Instead of 9 APIDs per band, Diagnostic data use one APID per IR band: APIDs 1294, 1295 and 1296 for LW, MW and SW respectively. The CrIS outputs these packets 34 times per 8 second scan if the Diagnostic Test Mode bit of the band's DSP Hardware Control Settings field in the Housekeeping Packet is set to Normal. This includes 30 diagnostic Earth FORs, 2 diagnostic Deep Space FORs and 2 diagnostic ICT FORs. If the Diagnostic Test Mode bit of a band is set to Process All frames, the CrIS outputs the APID 40 times per scan. The CrIS will exceed its allocated data rate if all three diagnostic packets are generated 40 times per scan. Each of these packets has a unique fixed length, shown below.

No bit trimming is performed in Diagnostic Mode. Each interferogram sample is put into a 16-bit word, regardless of its post-processing length or A/D resolution. Thus even a sample from a 14-bit A/D is put into a 16-bit word. With every sample of uniform length, the number of samples determines the length of the packet, as seen in Table 4.2-8.

Table 4.2-8. CrIS Diagnostic Interferogram Samples by IR Band

IR Band	Number of Samples	Packet Length (including headers)
LW	21038	42106
MW	10854	21738
SW	5506	11042

The Diagnostic packet formats are identical to the other Interferogram packets with two exceptions. First, is one data block for the actual detector samples. Second, the "Number of I words after bit trimming" in the Operational Interferogram packet is unnecessary and not included in the Diagnostic Packet. Figure 4.2-12 lays out the structure of APIDs 1294, 1295 and 1296. Table 4.2-9 lists the contents of the User Data field of the Diagnostic Interferogram Packet. The format of Table 4.2-9 remains the same but the mnemonic names will change depending on the apid. The Mnemonics for LW are depicted.

Check the JPSS MIS Server at https://jpssmis.gsfc.nasa.gov/frontmenu_dsp.cfm to verify that this is the correct version prior to use.

	PACKET PRIMARY HEADER							SECONDARY HEADER	User Data Field										
	Verson No.	Packet Identification			Packet Sequence		Packet Length		CrIS Science Header									Science	
		Type Indicator	Sec Hdr Flag	APID	Sequence Flags	Sequence Count		Start of Scan	PCE App FSW Version	Instrument ID	Scan Informatio n	Impulse Noise Count	ZPD Amplitude	ZPD Location	Number of Convert Pulses	Filter Status Upper Register	Filter Status Lower Register	Undecimated Interferogram Data	TOTAL
Bits	3	1	1	11	2	14	16	64	11	5	16	16	16	16	16	16	16	varies	varies
Octets	2				2		2	8	2		2	2	2	2	2	2	2	varies	varies
Value	000	0	1	varies	11	varies	varies	varies	varies	varies	varies	varies	varies	varies	varies	varies	varies	varies	

Telemetry Packet

Secondary Header Present

APID	Band
0x50E	LW
0x50F	MW
0x510	SW

Figure 4.2-12. CrIS Diagnostic Interferogram Packet Format

Table 4.2-9. CrIS Diagnostic Interferogram Packet User Data Fields

Start Bit	Bit Size	Mnemonic Name	Description	Units or State Value	Conversion Coefficients (formula or C5,C4,C3,C2,C1,C0) or State Name	Data Type
0	11	LW_PCEAppFSWVer	PCE Application Flight Software Version	N/A	N/A	U
11	5	LW_InstrumentID	Instrument ID	N/A	N/A	U
16	6	LW_ScanInfo(Field of Regard)	Scan Info(Field of Regard)	0 1-30 31 32 33	ICT Earth Scene # Deep Space UnknownFOR Nadir	U
22	2	LW_ScanInfo(Sweep Dir)	Scan Info(Sweep Direction)	0 1 2 3	Forward Reverse Unknown Unknown	U
24	2	LW_ScanInfo(Spare)	Scan Info(Spare)	N/A	N/A	U
26	1	LW_ScanInfo(End of PCI Sys Mem reached w/o end of dat ID)	Scan Info(End of PCI Sys Mem w/o EOD ID)	0 1	False True	U
27	1	LW_ScanInfo(I and Q Cnt Stat)	Scan Info(I and Q Count Status)	0 1	IQMatch IQNotMatch	U
28	4	LW_ScanInfo(Num Padded Zeros Added)	Scan Info(Number of Padded Zeros Added)	N/A	N/A	U
32	1	LW_ScanStatFlg(Invld Interferogram Dat-Exceed ZPD Sat Limit	Scan Stat Flg(Invld IGM Dat-ZPD Sat Lmt)	0 1	Valid Invalid	U
33	1	LW_ScanStatFlg(I Dat Bit Trim Failure)	Scan Stat Flg(I Data Bit Trim Fail)	0 1	False True	U
34	1	LW_ScanStatFlg(Q Dat Bit Trim Failure)	Scan Stat Flg(Q Data Bit Trim Fail)	0 1	False True	U
35	1	LW_ScanStatFlg(Fringe Cnt Err-Smple Pulse Err)	Scan Stat Flg(FCE(Sample Pulse Num Err))	0 1	False True	S
36	1	LW_ScanStatFlg(Spare1)	Scan Stat Flg(Spare)	N/A	N/A	U
37	1	LW_ScanStatFlg(I Coef Tbl mem Err)	Scan Stat Flg(I Coef Table Mem Err)	0 1	False True	U
38	1	LW_ScanStatFlg(Q Coef Tbl Mem Err)	Scan Stat Flg(Q Coef Table Mem Err)	0 1	False True	U
39	1	LW_ScanStatFlg(Bit Trim Tbl Mem Err)	Scan Stat Flg(Bit Trim Tbl Mem Err)	0 1	False True	U
40	1	LW_ScanStatFlg(Impulse Tbl Mem Err)	Scan Stat Flg(Impulse Tbl Mem Err)	0 1	False True	U
41	7	LW_ScanStatFlg(Spare2)	Scan Stat Flg(Spare)	N/A	N/A	U
48	6	LW_ImpulseNoiseCnt(Spare)	Impulse Noise Count(Spare)	N/A	N/A	U
54	10	LW_ImpulseNoiseCnt(Number Impulses Detected)	Number of impulses detected	N/A	N/A	U
64	6	LW_ZPDAmpChan(Spare)	ZPD Amplitude(Spare)	N/A	N/A	U
70	10	LW_ZPDAmpChan(ZPD Amp)	ZPD Amp (Bits 4-13 of the A/D Converter)	N/A	0,0,0,0,16,0	U
80	16	LW_ZPDLocChan(ZPD Location)	ZPD Location	N/A	N/A	U
96	3	LW_FilterStatUpperReg(FIR Revision Reg)	Filter Status Upper Reg.(FIR Revision Reg)	N/A	N/A	U
99	1	LW_FilterStatUpperReg(System Processor Last Bank Filled)	Filter Status Upper Reg.(System Processor Last Bank Filled)	0 1	Bank 1 Bank 2	U
100	1	LW_FilterStatUpperReg(Reserved)	Filter Status Upper Reg.(Reserved)	N/A	N/A	U

Check the JPSS MIS Server at https://jpssmis.gsfc.nasa.gov/frontmenu_dsp.cfm to verify that this is the correct version prior to use.

Start Bit	Bit Size	Mnemonic Name	Description	Units or State Value	Conversion Coefficients (formula or C5,C4,C3,C2,C1,C0) or State Name	Data Type
101	5	LW_FilterStatUpperReg(Diag Mode Chan Sel)	Filter Status Upper Reg.(Diag Mode Chan. Select)	24 25 26 27 20 21 22 23 12 13-15 All Others	Channel 1 Channel 2 Channel 3 Channel 4 Channel 5 Channel 6 Channel 7 Channel 8 Channel 9 Not Used Invalid	U
106	1	LW_FilterStatUpperReg(Diag Mode En/Disable)	Filter Status Upper Reg.(Diag Mode Enable/Disable)	0 1	Disabled Enabled	U
107	1	LW_FilterStatUpperReg(Byte Swap Mode)	Filter Status Upper Reg.(Byte Swap Mode)	0 1	Disabled Enabled	U
108	1	LW_FilterStatUpperReg(Num of Sample Pulse Err)	Filter Status Upper Reg.(Number Sample Pulse Error)	0 1	No Error Error	U
109	1	LW_FilterStatUpperReg(Coef Set 2 Checksum Err)	Filter Status Upper Reg.(Coef Set 2 Checksum Error)	0 1	No Error Error	U
110	1	LW_FilterStatUpperReg(Coef Set 1 Checksum Err)	Filter Status Upper Reg.(Coef Set 1 Checksum Error)	0 1	No Error Error	U
111	1	LW_FilterStatUpperReg(Impuse Mask Err)	Filter Status Upper Reg.(Impuse Mask Error)	0 1	No Error Error	U
112	5	LW_FilterStatLowerReg(Not Used1)	Filter Status Lower Reg.(Not Used1)	N/A	N/A	U
117	1	LW_FilterStatLowerReg(Num Output Filter Smpl err)	Filter Status Lower Reg.(Number Output Filter Smpl Error)	0 1	False True	U
118	1	LW_FilterStatLowerReg(Not Used2)	Filter Status Lower Reg.(Not Used2)	N/A	N/A	U
119	1	LW_FilterStatLowerReg(Busy TO AD#9)	Filter Status Lower Reg.(Busy TO AD#9)	0 1	NoTimeout Timeout	U
120	1	LW_FilterStatLowerReg(Busy TO AD#8)	Filter Status Lower Reg.(Busy TO AD#8)	0 1	NoTimeout Timeout	U
121	1	LW_FilterStatLowerReg(Busy TO AD#7)	Filter Status Lower Reg.(Busy TO AD#7)	0 1	NoTimeout Timeout	U
122	1	LW_FilterStatLowerReg(Busy TO AD#6)	Filter Status Lower Reg.(Busy TO AD#6)	0 1	NoTimeout Timeout	U
123	1	LW_FilterStatLowerReg(Busy TO AD#5)	Filter Status Lower Reg.(Busy TO AD#5)	0 1	NoTimeout Timeout	U
124	1	LW_FilterStatLowerReg(Busy TO AD#4)	Filter Status Lower Reg.(Busy TO AD#4)	0 1	NoTimeout Timeout	U
125	1	LW_FilterStatLowerReg(Busy TO AD#3)	Filter Status Lower Reg.(Busy TO AD#3)	0 1	NoTimeout Timeout	U
126	1	LW_FilterStatLowerReg(Busy TO AD#2)	Filter Status Lower Reg.(Busy TO AD#2)	0 1	NoTimeout Timeout	U
127	1	LW_FilterStatLowerReg(Busy TO AD#1)	Filter Status Lower Reg.(Busy TO AD#1)	0 1	NoTimeout Timeout	U
128	16	LW_DIA_DetectorData	Diagnostic Detector Data	N/A	N/A	S
varies	16	LW_DIA_DetectorData	Diagnostic Detector Data	N/A	N/A	S

Check the JPSS MIS Server at https://jpssmis.gsfc.nasa.gov/frontmenu_dsp.cfm to verify that this is the correct version prior to use.

4.2.4.5 Dwell Data

Three types of dwell packets are commandable from the CrIS sensor in Diagnostic mode. All three types of packets are generated at every scan epoch (40 times per 8 second scan).

4.2.4.5.1 IM Telemetry Dwell

The Interferometer Module Telemetry Dwell provides fast sampling of seven selectable channels within the IM. Each channel is sampled 80 times with a single epoch. The CrIS outputs APID 1293 forty times per 8 second scan. The packet length is fixed at 1150 octets. Figure 4.2-13 displays the packet structure. Table 4.2-10 lists the contents of the User Data Field.

Check the JPSS MIS Server at https://jpssmis.gsfc.nasa.gov/frontmenu_dsp.cfm to verify that this is the correct version prior to use.

CrIS IM Telemetry Dwell Packet **VERSION B** **DATE**

	PACKET PRIMARY HEADER							SECONDARY HEADER	User Data Field								
	Verson No.	Packet Identification			Packet Sequence		Packet Length		CrIS IM Telemetry Dwell Data								
		Type Indicator	Sec Hdr Flag	APID	Sequence Flags	Sequence Count		Start of Scan	PCE App FSW Version	Instrument ID	Dwell Channel Address 1-7	Channel 1-7, Sample 1	Channel 1-7, Samples 2-80	Spare	IM Status Flags	IM Error Flags	TOTAL
Bits	3	1	1	11	2	14	16	64	11	5	64	112	8848	16	16	16	9200
Octets	2				2		2	8	2		8	14	1106	2	2	2	1150
Value	000	0	1	0x50D	11	varies	0x0477	varies	varies	varies	varies	varies	varies	varies	varies	varies	

Telemetry Packet

Secondary Header Present

Figure 4.2-13. CrIS IM Telemetry Dwell Packet Forma

Check the JPSS MIS Server at https://jpssmis.gsfc.nasa.gov/frontmenu_dsp.cfm to verify that this is the correct version prior to use.

Table 4.2-10. CrIS IM Telemetry Dwell Packet User Data Fields

Start Bit	Bit Size	Mnemonic Name	Description	Units or State Value	Conversion Coefficients (formula or C5,C4,C3,C2,C1,C0) OR State Name	Data Type
0	11	IFM_PCEAppFswVer	PCE Application FSW Version	N/A	N/A	U
11	5	IFM_InstrumentID	Instrument ID	N/A	N/A	U
16	8	IFM_DwellChanAddr2	IFM Dwell Channel Address 2	N/A	N/A	U
24	8	IFM_DwellChanAddr1	IFM Dwell Channel Address 1	N/A	N/A	U
32	8	IFM_DwellChanAddr4	IFM Dwell Channel Address 4	N/A	N/A	U
40	8	IFM_DwellChanAddr3	IFM Dwell Channel Address 3	N/A	N/A	U
48	8	IFM_DwellChanAddr6	IFM Dwell Channel Address 6	N/A	N/A	U
56	8	IFM_DwellChanAddr5	IFM Dwell Channel Address 5	N/A	N/A	U
64	8	IFM_Spare1	Spare	N/A	N/A	U
72	8	IFM_DwellChanAddr7	IFM Dwell Channel Address 7	N/A	N/A	U
80	112	IFM_Chan#Sample1	Sample 1 from Channels # 1 to #7	N/A	N/A	U
192	112	IFM_Chan#Sample2	Sample 2 from Channels # 1 to #7	N/A	N/A	U
304	112	IFM_Chan#Sample3	Sample 3 from Channels # 1 to #7	N/A	N/A	U
416	112	IFM_Chan#Sample4	Sample 4 from Channels # 1 to #7	N/A	N/A	U
528	112	IFM_Chan#Sample5	Sample 5 from Channels # 1 to #7	N/A	N/A	U
640	112	IFM_Chan#Sample6	Sample 6 from Channels # 1 to #7	N/A	N/A	U
752	112	IFM_Chan#Sample7	Sample 7 from Channels # 1 to #7	N/A	N/A	U
864	112	IFM_Chan#Sample8	Sample 8 from Channels # 1 to #7	N/A	N/A	U
976	112	IFM_Chan#Sample9	Sample 9 from Channels # 1 to #7	N/A	N/A	U
1088	112	IFM_Chan#Sample10	Sample 10 from Channels # 1 to #7	N/A	N/A	U
1200	112	IFM_Chan#Sample11	Sample 11 from Channels # 1 to #7	N/A	N/A	U
1312	112	IFM_Chan#Sample12	Sample 12 from Channels # 1 to #7	N/A	N/A	U
1424	112	IFM_Chan#Sample13	Sample 13 from Channels # 1 to #7	N/A	N/A	U
1536	112	IFM_Chan#Sample14	Sample 14 from Channels # 1 to #7	N/A	N/A	U
1648	112	IFM_Chan#Sample15	Sample 15 from Channels # 1 to #7	N/A	N/A	U
1760	112	IFM_Chan#Sample16	Sample 16 from Channels # 1 to #7	N/A	N/A	U
1872	112	IFM_Chan#Sample17	Sample 17 from Channels # 1 to #7	N/A	N/A	U
1984	112	IFM_Chan#Sample18	Sample 18 from Channels # 1 to #7	N/A	N/A	U
2096	112	IFM_Chan#Sample19	Sample 19 from Channels # 1 to #7	N/A	N/A	U
2208	112	IFM_Chan#Sample20	Sample 20 from Channels # 1 to #7	N/A	N/A	U
2320	112	IFM_Chan#Sample21	Sample 21 from Channels # 1 to #7	N/A	N/A	U
2432	112	IFM_Chan#Sample22	Sample 22 from Channels # 1 to #7	N/A	N/A	U
2544	112	IFM_Chan#Sample23	Sample 23 from Channels # 1 to #7	N/A	N/A	U
2656	112	IFM_Chan#Sample24	Sample 24 from Channels # 1 to #7	N/A	N/A	U
2768	112	IFM_Chan#Sample25	Sample 25 from Channels # 1 to #7	N/A	N/A	U
2880	112	IFM_Chan#Sample26	Sample 26 from Channels # 1 to #7	N/A	N/A	U
2992	112	IFM_Chan#Sample27	Sample 27 from Channels # 1 to #7	N/A	N/A	U
3104	112	IFM_Chan#Sample28	Sample 28 from Channels # 1 to #7	N/A	N/A	U
3216	112	IFM_Chan#Sample29	Sample 29 from Channels # 1 to #7	N/A	N/A	U
3328	112	IFM_Chan#Sample30	Sample 30 from Channels # 1 to #7	N/A	N/A	U
3440	112	IFM_Chan#Sample31	Sample 31 from Channels # 1 to #7	N/A	N/A	U
3552	112	IFM_Chan#Sample32	Sample 32 from Channels # 1 to #7	N/A	N/A	U

Start Bit	Bit Size	Mnemonic Name	Description	Units or State Value	Conversion Coefficients (formula or C5,C4,C3,C2,C1,C0) OR State Name	Data Type
3664	112	IFM_Chan#Sample33	Sample 33 from Channels # 1 to #7	N/A	N/A	U
3776	112	IFM_Chan#Sample34	Sample 34 from Channels # 1 to #7	N/A	N/A	U
3888	112	IFM_Chan#Sample35	Sample 35 from Channels # 1 to #7	N/A	N/A	U
4000	112	IFM_Chan#Sample36	Sample 36 from Channels # 1 to #7	N/A	N/A	U
4112	112	IFM_Chan#Sample37	Sample 37 from Channels # 1 to #7	N/A	N/A	U
4224	112	IFM_Chan#Sample38	Sample 38 from Channels # 1 to #7	N/A	N/A	U
4336	112	IFM_Chan#Sample39	Sample 39 from Channels # 1 to #7	N/A	N/A	U
4448	112	IFM_Chan#Sample40	Sample 40 from Channels # 1 to #7	N/A	N/A	U
4560	112	IFM_Chan#Sample41	Sample 41 from Channels # 1 to #7	N/A	N/A	U
4672	112	IFM_Chan#Sample42	Sample 42 from Channels # 1 to #7	N/A	N/A	U
4784	112	IFM_Chan#Sample43	Sample 43 from Channels # 1 to #7	N/A	N/A	U
4896	112	IFM_Chan#Sample44	Sample 44 from Channels # 1 to #7	N/A	N/A	U
5008	112	IFM_Chan#Sample45	Sample 45 from Channels # 1 to #7	N/A	N/A	U
5120	112	IFM_Chan#Sample46	Sample 46 from Channels # 1 to #7	N/A	N/A	U
5232	112	IFM_Chan#Sample47	Sample 47 from Channels # 1 to #7	N/A	N/A	U
5344	112	IFM_Chan#Sample48	Sample 48 from Channels # 1 to #7	N/A	N/A	U
5456	112	IFM_Chan#Sample49	Sample 49 from Channels # 1 to #7	N/A	N/A	U
5568	112	IFM_Chan#Sample50	Sample 50 from Channels # 1 to #7	N/A	N/A	U
5680	112	IFM_Chan#Sample51	Sample 51 from Channels # 1 to #7	N/A	N/A	U
5792	112	IFM_Chan#Sample52	Sample 52 from Channels # 1 to #7	N/A	N/A	U
5904	112	IFM_Chan#Sample53	Sample 53 from Channels # 1 to #7	N/A	N/A	U
6016	112	IFM_Chan#Sample54	Sample 54 from Channels # 1 to #7	N/A	N/A	U
6128	112	IFM_Chan#Sample55	Sample 55 from Channels # 1 to #7	N/A	N/A	U
6240	112	IFM_Chan#Sample56	Sample 56 from Channels # 1 to #7	N/A	N/A	U
6352	112	IFM_Chan#Sample57	Sample 57 from Channels # 1 to #7	N/A	N/A	U
6464	112	IFM_Chan#Sample58	Sample 58 from Channels # 1 to #7	N/A	N/A	U
6576	112	IFM_Chan#Sample59	Sample 59 from Channels # 1 to #7	N/A	N/A	U
6688	112	IFM_Chan#Sample60	Sample 60 from Channels # 1 to #7	N/A	N/A	U
6800	112	IFM_Chan#Sample61	Sample 61 from Channels # 1 to #7	N/A	N/A	U
6912	112	IFM_Chan#Sample62	Sample 62 from Channels # 1 to #7	N/A	N/A	U
7024	112	IFM_Chan#Sample63	Sample 63 from Channels # 1 to #7	N/A	N/A	U
7136	112	IFM_Chan#Sample64	Sample 64 from Channels # 1 to #7	N/A	N/A	U
7248	112	IFM_Chan#Sample65	Sample 65 from Channels # 1 to #7	N/A	N/A	U
7360	112	IFM_Chan#Sample66	Sample 66 from Channels # 1 to #7	N/A	N/A	U
7472	112	IFM_Chan#Sample67	Sample 67 from Channels # 1 to #7	N/A	N/A	U
7584	112	IFM_Chan#Sample68	Sample 68 from Channels # 1 to #7	N/A	N/A	U
7696	112	IFM_Chan#Sample69	Sample 69 from Channels # 1 to #7	N/A	N/A	U
7808	112	IFM_Chan#Sample70	Sample 70 from Channels # 1 to #7	N/A	N/A	U
7920	112	IFM_Chan#Sample71	Sample 71 from Channels # 1 to #7	N/A	N/A	U
8032	112	IFM_Chan#Sample72	Sample 72 from Channels # 1 to #7	N/A	N/A	U
8144	112	IFM_Chan#Sample73	Sample 73 from Channels # 1 to #7	N/A	N/A	U
8256	112	IFM_Chan#Sample74	Sample 74 from Channels # 1 to #7	N/A	N/A	U

Start Bit	Bit Size	Mnemonic Name	Description	Units or State Value	Conversion Coefficients (formula or C5,C4,C3,C2,C1,C0) OR State Name	Data Type
8368	112	IFM_Chan#Sample75	Sample 75 from Channels # 1 to #7	N/A	N/A	U
8480	112	IFM_Chan#Sample76	Sample 76 from Channels # 1 to #7	N/A	N/A	U
8592	112	IFM_Chan#Sample77	Sample 77 from Channels # 1 to #7	N/A	N/A	U
8704	112	IFM_Chan#Sample78	Sample 78 from Channels # 1 to #7	N/A	N/A	U
8816	112	IFM_Chan#Sample79	Sample 79 from Channels # 1 to #7	N/A	N/A	U
8928	112	IFM_Chan#Sample80	Sample 80 from Channels # 1 to #7	N/A	N/A	U
9040	16	IFM_Spare2	Spare	N/A	N/A	U
9056	5	IFM_StatFlags(spare2)	IFM Status Flags(spare2)	N/A	N/A	U
9061	2	IFM_StatFlag(Infer Mode Stat)	IFM Status Flag(IFM Mode Status)	0 1 2 3	Standby Nominal EEPROM Invalid	U
9063	1	IFM_StatFlags(spare1)	IFM Status Flags(spare1)			U
9064	1	IFM_StatFlags(Porchswing Sweep Dir)	IFM Status Flags(Porchswing Sweep Direction)	0 1	reverse direction forward direction	U
9065	1	IFM_StatFlag(Porchswing Sweep Lock)	IFM Status Flag(Porchswing Sweep Lock)	0 1	Position Error Sweeps Synced	U
9066	1	IFM_StatFlags(Loss PCE Frame Sync Pulse Stat)	IFM Status Flags(Loss PCE Frame Sync Pulse)	0 1	No Sync Received Sync Received	U
9067	1	IFM_StatFlags(Porchswing MPD Switch Stat)	IFM Status Flags(Porchswing MPD Switch Status)	0 1	No Limit Reached Limit Reached	U
9068	1	IFM_StatFlags(Porchswing ZPD Switch Stat)	IFM Status Flags(Porchswing ZPD Switch Status)	0 1	Away from BmSp Towards BmSP	U
9069	1	IFM_StatFlags(DA Servo Status	IFM Status Flags(DA Servo Status)	0 1	Off On	U
9070	1	IFM_StatFlags(DA-Y servo locked)	IFM Status Flags(DA-Y servo locked)	0 1	Phase Unlocked Phase Locked	U
9071	1	IFM_StatFlags(DA-X servo locked)	IFM Status Flags(DA-X servo locked)	0 1	Phase Unlocked Phase Locked	U
9072	12	IFM_ErrFlags(Spare)	IFM Error Flags(Spare)	N/A	N/A	U
9084	1	IFM_ErrFlags(Tele Validity)	IFM Error Flags(Tlm Validity)	0 1	Invalid Valid	U
9085	1	IFM_ErrFlags(Cmd Proc Err)	IFM Error Flags(Cmd Processor Error)	0 1	False True	U
9086	2	IFM_ErrFlags(Packet Reception Err)	IFM Error Flags(Packet Reception Error)	00 01 10 11	No Error CRC Error Invalid Packet Format Invalid Cmd Word	U

4.2.4.5.2 HK Telemetry Dwell

The Housekeeping Telemetry Dwell provides fast sampling of six selected housekeeping telemetry points. Each selection is sampled 80 times with a single epoch. The CrIS outputs APID 1291 forty times per 8 second scan. The packet length is fixed at 988 octets. Figure 4.2-14 displays the packet structure. Table 4.2-11 lists the contents of the User Data Field.

CrIS Housekeeping Telemetry Dwell Packet **VERSION B** **DATE**

	PACKET PRIMARY HEADER							SECONDARY HEADER	User Data Field					
	Verson No.	Packet Identification			Packet Sequence		Packet Length		CrIS IM Telemetry Dwell Data					
		Type Indicator	Sec Hdr Flag	APID	Sequence Flags	Sequence Count		Start of Scan	PCE App FSW Version	Instrument ID	Dwell Channel Address 1-3,5-7	Channels 1 3,5-7, Sample 1	Channels 1-3 and 5-7, Samples 2 80	TOTAL
Bits	3	1	1	11	2	14	16	64	11	5	96	96	7584	7904
Octets	2				2		2	8	2		12	12	948	988
Value	000	0	1	0x50B	11	varies	0x03D5	varies	varies	varies	varies	varies	varies	

Telemetry Packet

Secondary Header Present

Figure 4.2-14. CrIS Housekeeping Telemetry Dwell Packet Format

Check the JPSS MIS Server at https://jpssmis.gsfc.nasa.gov/frontmenu_dsp.cfm to verify that this is the correct version prior to use.

Table 4.2-11. CrIS Housekeeping Telemetry Dwell Packet User Data Fields

Start Bit	Bit Size	Mnemonic Name	Description	Units or State Value	Conversion Coefficients (formula or C5,C4,C3,C2,C1,C0) or State Name	Data Type
0	11	HK_PCEAppFSWVer	PCE Application FSW Version	N/A	N/A	U
11	5	HK_InstrumentID	Instrument ID	N/A	N/A	U
16	16	HK_DwellChanAddr1	HK Dwell Channel Address 1	N/A	N/A	U
32	16	HK_DwellChanAddr2	HK Dwell Channel Address 2	N/A	N/A	U
48	16	HK_DwellChanAddr3	HK Dwell Channel Address 3	N/A	N/A	U
64	16	HK_DwellChanAddr5	HK Dwell Channel Address 5	N/A	N/A	U
80	16	HK_DwellChanAddr6	HK Dwell Channel Address 6	N/A	N/A	U
96	16	HK_DwellChanAddr7	HK Dwell Channel Address 7	N/A	N/A	U
112	96	HK_Chan#Sample1	Sample 1 from Data Selection # 1 to #3 and #5 to #7	N/A	N/A	U
208	96	HK_Chan#Sample2	Sample 2 from Data Selection # 1 to # 3 and #5 to #7	N/A	N/A	U
304	96	HK_Chan#Sample3	Sample 3 from Data Selection # 1 to # 3 and #5 to #7	N/A	N/A	U
400	96	HK_Chan#Sample4	Sample 4 from Data Selection # 1 to # 3 and #5 to #7	N/A	N/A	U
496	96	HK_Chan#Sample5	Sample 5 from Data Selection # 1 to # 3 and #5 to #7	N/A	N/A	U
592	96	HK_Chan#Sample6	Sample 6 from Data Selection # 1 to # 3 and #5 to #7	N/A	N/A	U
688	96	HK_Chan#Sample7	Sample 7 from Data Selection # 1 to # 3 and #5 to #7	N/A	N/A	U
784	96	HK_Chan#Sample8	Sample 8 from Data Selection # 1 to # 3 and #5 to #7	N/A	N/A	U
880	96	HK_Chan#Sample9	Sample 9 from Data Selection # 1 to # 3 and #5 to #7	N/A	N/A	U
976	96	HK_Chan#Sample10	Sample 10 from Data Selection # 1 to # 3 and #5 to #7	N/A	N/A	U
1072	96	HK_Chan#Sample11	Sample 11 from Data Selection # 1 to # 3 and #5 to #7	N/A	N/A	U
1168	96	HK_Chan#Sample12	Sample 12 from Data Selection # 1 to # 3 and #5 to #7	N/A	N/A	U
1264	96	HK_Chan#Sample13	Sample 13 from Data Selection # 1 to # 3 and #5 to #7	N/A	N/A	U
1360	96	HK_Chan#Sample14	Sample 14 from Data Selection # 1 to # 3 and #5 to #7	N/A	N/A	U
1456	96	HK_Chan#Sample15	Sample 15 from Data Selection # 1 to # 3 and #5 to #7	N/A	N/A	U
1552	96	HK_Chan#Sample16	Sample 16 from Data Selection # 1 to # 3 and #5 to #7	N/A	N/A	U
1648	96	HK_Chan#Sample17	Sample 17 from Data Selection # 1 to # 3 and #5 to #7	N/A	N/A	U
1744	96	HK_Chan#Sample18	Sample 18 from Data Selection # 1 to # 3 and #5 to #7	N/A	N/A	U
1840	96	HK_Chan#Sample19	Sample 19 from Data Selection # 1 to # 3 and #5 to #7	N/A	N/A	U
1936	96	HK_Chan#Sample20	Sample 20 from Data Selection # 1 to # 3 and #5 to #7	N/A	N/A	U
2032	96	HK_Chan#Sample21	Sample 21 from Data Selection # 1 to # 3 and #5 to #7	N/A	N/A	U
2128	96	HK_Chan#Sample22	Sample 22 from Data Selection # 1 to # 3 and #5 to #7	N/A	N/A	U
2224	96	HK_Chan#Sample23	Sample 23 from Data Selection # 1 to # 3 and #5 to #7	N/A	N/A	U
2320	96	HK_Chan#Sample24	Sample 24 from Data Selection # 1 to # 3 and #5 to #7	N/A	N/A	U
2416	96	HK_Chan#Sample25	Sample 25 from Data Selection # 1 to # 3 and #5 to #7	N/A	N/A	U
2512	96	HK_Chan#Sample26	Sample 26 from Data Selection # 1 to # 3 and #5 to #7	N/A	N/A	U
2608	96	HK_Chan#Sample27	Sample 27 from Data Selection # 1 to # 3 and #5 to #7	N/A	N/A	U
2704	96	HK_Chan#Sample28	Sample 28 from Data Selection # 1 to # 3 and #5 to #7	N/A	N/A	U
2800	96	HK_Chan#Sample29	Sample 29 from Data Selection # 1 to # 3 and #5 to #7	N/A	N/A	U
2896	96	HK_Chan#Sample30	Sample 30 from Data Selection # 1 to # 3 and #5 to #7	N/A	N/A	U
2992	96	HK_Chan#Sample31	Sample 31 from Data Selection # 1 to # 3 and #5 to #7	N/A	N/A	U
3088	96	HK_Chan#Sample32	Sample 32 from Data Selection # 1 to # 3 and #5 to #7	N/A	N/A	U
3184	96	HK_Chan#Sample33	Sample 33 from Data Selection # 1 to # 3 and #5 to #7	N/A	N/A	U
3280	96	HK_Chan#Sample34	Sample 34 from Data Selection # 1 to # 3 and #5 to #7	N/A	N/A	U
3376	96	HK_Chan#Sample35	Sample 35 from Data Selection # 1 to # 3 and #5 to #7	N/A	N/A	U
3472	96	HK_Chan#Sample36	Sample 36 from Data Selection # 1 to # 3 and #5 to #7	N/A	N/A	U

Check the JPSS MIS Server at https://jpssmis.gsfc.nasa.gov/frontmenu_dsp.cfm to verify that this is the correct version prior to use.

Start Bit	Bit Size	Mnemonic Name	Description	Units or State Value	Conversion Coefficients (formula or C5,C4,C3,C2,C1,C0) or State Name	Data Type
3568	96	HK_Chan#Sample37	Sample 37 from Data Selection # 1 to # 3 and #5 to #7	N/A	N/A	U
3664	96	HK_Chan#Sample38	Sample 38 from Data Selection # 1 to # 3 and #5 to #7	N/A	N/A	U
3760	96	HK_Chan#Sample39	Sample 39 from Data Selection # 1 to # 3 and #5 to #7	N/A	N/A	U
3856	96	HK_Chan#Sample40	Sample 40 from Data Selection # 1 to # 3 and #5 to #7	N/A	N/A	U
3952	96	HK_Chan#Sample41	Sample 41 from Data Selection # 1 to # 3 and #5 to #7	N/A	N/A	U
4048	96	HK_Chan#Sample42	Sample 42 from Data Selection # 1 to # 3 and #5 to #7	N/A	N/A	U
4144	96	HK_Chan#Sample43	Sample 43 from Data Selection # 1 to # 3 and #5 to #7	N/A	N/A	U
4240	96	HK_Chan#Sample44	Sample 44 from Data Selection # 1 to # 3 and #5 to #7	N/A	N/A	U
4336	96	HK_Chan#Sample45	Sample 45 from Data Selection # 1 to # 3 and #5 to #7	N/A	N/A	U
4432	96	HK_Chan#Sample46	Sample 46 from Data Selection # 1 to # 3 and #5 to #7	N/A	N/A	U
4528	96	HK_Chan#Sample47	Sample 47 from Data Selection # 1 to # 3 and #5 to #7	N/A	N/A	U
4624	96	HK_Chan#Sample48	Sample 48 from Data Selection # 1 to # 3 and #5 to #7	N/A	N/A	U
4720	96	HK_Chan#Sample49	Sample 49 from Data Selection # 1 to # 3 and #5 to #7	N/A	N/A	U
4816	96	HK_Chan#Sample50	Sample 50 from Data Selection # 1 to # 3 and #5 to #7	N/A	N/A	U
4912	96	HK_Chan#Sample51	Sample 51 from Data Selection # 1 to # 3 and #5 to #7	N/A	N/A	U
5008	96	HK_Chan#Sample52	Sample 52 from Data Selection # 1 to # 3 and #5 to #7	N/A	N/A	U
5104	96	HK_Chan#Sample53	Sample 53 from Data Selection # 1 to # 3 and #5 to #7	N/A	N/A	U
5200	96	HK_Chan#Sample54	Sample 54 from Data Selection # 1 to # 3 and #5 to #7	N/A	N/A	U
5296	96	HK_Chan#Sample55	Sample 55 from Data Selection # 1 to # 3 and #5 to #7	N/A	N/A	U
5392	96	HK_Chan#Sample56	Sample 56 from Data Selection # 1 to # 3 and #5 to #7	N/A	N/A	U
5488	96	HK_Chan#Sample57	Sample 57 from Data Selection # 1 to # 3 and #5 to #7	N/A	N/A	U
5584	96	HK_Chan#Sample58	Sample 58 from Data Selection # 1 to # 3 and #5 to #7	N/A	N/A	U
5680	96	HK_Chan#Sample59	Sample 59 from Data Selection # 1 to # 3 and #5 to #7	N/A	N/A	U
5776	96	HK_Chan#Sample60	Sample 60 from Data Selection # 1 to # 3 and #5 to #7	N/A	N/A	U
5872	96	HK_Chan#Sample61	Sample 61 from Data Selection # 1 to # 3 and #5 to #7	N/A	N/A	U
5968	96	HK_Chan#Sample62	Sample 62 from Data Selection # 1 to # 3 and #5 to #7	N/A	N/A	U
6064	96	HK_Chan#Sample63	Sample 63 from Data Selection # 1 to # 3 and #5 to #7	N/A	N/A	U
6160	96	HK_Chan#Sample64	Sample 64 from Data Selection # 1 to # 3 and #5 to #7	N/A	N/A	U
6256	96	HK_Chan#Sample65	Sample 65 from Data Selection # 1 to # 3 and #5 to #7	N/A	N/A	U
6352	96	HK_Chan#Sample66	Sample 66 from Data Selection # 1 to # 3 and #5 to #7	N/A	N/A	U
6448	96	HK_Chan#Sample67	Sample 67 from Data Selection # 1 to # 3 and #5 to #7	N/A	N/A	U
6544	96	HK_Chan#Sample68	Sample 68 from Data Selection # 1 to # 3 and #5 to #7	N/A	N/A	U
6640	96	HK_Chan#Sample69	Sample 69 from Data Selection # 1 to # 3 and #5 to #7	N/A	N/A	U
6736	96	HK_Chan#Sample70	Sample 70 from Data Selection # 1 to # 3 and #5 to #7	N/A	N/A	U
6832	96	HK_Chan#Sample71	Sample 71 from Data Selection # 1 to # 3 and #5 to #7	N/A	N/A	U
6928	96	HK_Chan#Sample72	Sample 72 from Data Selection # 1 to # 3 and #5 to #7	N/A	N/A	U
7024	96	HK_Chan#Sample73	Sample 73 from Data Selection # 1 to # 3 and #5 to #7	N/A	N/A	U
7120	96	HK_Chan#Sample74	Sample 74 from Data Selection # 1 to # 3 and #5 to #7	N/A	N/A	U
7216	96	HK_Chan#Sample75	Sample 75 from Data Selection # 1 to # 3 and #5 to #7	N/A	N/A	U
7312	96	HK_Chan#Sample76	Sample 76 from Data Selection # 1 to # 3 and #5 to #7	N/A	N/A	U
7408	96	HK_Chan#Sample77	Sample 77 from Data Selection # 1 to # 3 and #5 to #7	N/A	N/A	U
7504	96	HK_Chan#Sample78	Sample 78 from Data Selection # 1 to # 3 and #5 to #7	N/A	N/A	U
7600	96	HK_Chan#Sample79	Sample 79 from Data Selection # 1 to # 3 and #5 to #7	N/A	N/A	U
7696	96	HK_Chan#Sample80	Sample 80 from Data Selection # 1 to # 3 and #5 to #7	N/A	N/A	U

4.2.4.5.3 SSM Telemetry Dwell

The Scene Selection Module Telemetry Dwell provides fast sampling of seven selectable channels within the SSM. Each channel is sampled 80 times with a single epoch. The CrIS outputs APID 1292 forty times per 8 second scan. The packet length is fixed at 1150 octets. Figure 4.2-15 displays the packet structure. Table 4.2-12 lists the contents of the User Data Field.

	PACKET PRIMARY HEADER							SECONDARY HEADER	User Data Field								
	Verson No.	Packet Identification			Packet Sequence		Packet Length		CrIS SSM Telemetry Dwell Data								
		Type Indicator	Sec Hdr Flag	APID	Sequence Flags	Sequence Count		Start of Scan	PCE App FSW Version	Instrument ID	Dwell Channel Address 1-7	Channel 1-7, Sample 1	Channel 1-7, Samples 2-80	Spare	SSM Status Flags	SSM Error Flags	TOTAL
Bits	3	1	1	11	2	14	16	64	11	5	64	112	8848	16	16	16	9200
Octets	2				2		2	8	2		8	14	1106	2	2	2	1150
Value	000	0	1	0x50C	11	varies	0x0477	varies	varies	varies	varies	varies	varies	varies	varies	varies	

Telemetry Packet

Secondary Header Present

Figure 4.2-15. CrIS SSM Telemetry Dwell Packet Format

Table 4.2-12. CrIS SSM Telemetry Dwell Packet User Data Fields

Start Bit	Bit Size	Mnemonic Name	Description	Units or State Value	Conversion Coefficients (formula or C5,C4,C3,C2,C1,C0) or State Name	Data Type
0	11	SSM_PCEAppFswVer	PCE Application FSW Version	N/A	N/A	U
11	5	SSM_InstrumentID	Instrument ID	N/A	N/A	U
16	8	SSM_DwellChanAddr2	Dwell channel address #2	N/A	N/A	U
24	8	SSM_DwellChanAddr1	Dwell channel address #1	N/A	N/A	U
32	8	SSM_DwellChanAddr4	Dwell channel address #4	N/A	N/A	U
40	8	SSM_DwellChanAddr3	Dwell channel address #3	N/A	N/A	U
48	8	SSM_DwellChanAddr6	Dwell channel address #6	N/A	N/A	U
56	8	SSM_DwellChanAddr5	Dwell channel address #5	N/A	N/A	U
64	8	SSM_Spare1	Spare	N/A	N/A	U
72	8	SSM_DwellChanAddr7	Dwell channel address #7	N/A	N/A	U
80	112	SSM_Chan#Sample1	Sample 1 from Channels # 1 to #7	N/A	N/A	U
192	112	SSM_Chan#Sample2	Sample 2 from Channels # 1 to #7	N/A	N/A	U
304	112	SSM_Chan#Sample3	Sample 3 from Channels # 1 to #7	N/A	N/A	U
416	112	SSM_Chan#Sample4	Sample 4 from Channels # 1 to #7	N/A	N/A	U
528	112	SSM_Chan#Sample5	Sample 5 from Channels # 1 to #7	N/A	N/A	U
640	112	SSM_Chan#Sample6	Sample 6 from Channels # 1 to #7	N/A	N/A	U
752	112	SSM_Chan#Sample7	Sample 7 from Channels # 1 to #7	N/A	N/A	U
864	112	SSM_Chan#Sample8	Sample 8 from Channels # 1 to #7	N/A	N/A	U
976	112	SSM_Chan#Sample9	Sample 9 from Channels # 1 to #7	N/A	N/A	U
1088	112	SSM_Chan#Sample10	Sample 10 from Channels # 1 to #7	N/A	N/A	U
1200	112	SSM_Chan#Sample11	Sample 11 from Channels # 1 to #7	N/A	N/A	U
1312	112	SSM_Chan#Sample12	Sample 12 from Channels # 1 to #7	N/A	N/A	U
1424	112	SSM_Chan#Sample13	Sample 13 from Channels # 1 to #7	N/A	N/A	U
1536	112	SSM_Chan#Sample14	Sample 14 from Channels # 1 to #7	N/A	N/A	U
1648	112	SSM_Chan#Sample15	Sample 15 from Channels # 1 to #7	N/A	N/A	U
1760	112	SSM_Chan#Sample16	Sample 16 from Channels # 1 to #7	N/A	N/A	U
1872	112	SSM_Chan#Sample17	Sample 17 from Channels # 1 to #7	N/A	N/A	U
1984	112	SSM_Chan#Sample18	Sample 18 from Channels # 1 to #7	N/A	N/A	U
2096	112	SSM_Chan#Sample19	Sample 19 from Channels # 1 to #7	N/A	N/A	U
2208	112	SSM_Chan#Sample20	Sample 20 from Channels # 1 to #7	N/A	N/A	U
2320	112	SSM_Chan#Sample21	Sample 21 from Channels # 1 to #7	N/A	N/A	U
2432	112	SSM_Chan#Sample22	Sample 22 from Channels # 1 to #7	N/A	N/A	U
2544	112	SSM_Chan#Sample23	Sample 23 from Channels # 1 to #7	N/A	N/A	U
2656	112	SSM_Chan#Sample24	Sample 24 from Channels # 1 to #7	N/A	N/A	U
2768	112	SSM_Chan#Sample25	Sample 25 from Channels # 1 to #7	N/A	N/A	U
2880	112	SSM_Chan#Sample26	Sample 26 from Channels # 1 to #7	N/A	N/A	U
2992	112	SSM_Chan#Sample27	Sample 27 from Channels # 1 to #7	N/A	N/A	U
3104	112	SSM_Chan#Sample28	Sample 28 from Channels # 1 to #7	N/A	N/A	U
3216	112	SSM_Chan#Sample29	Sample 29 from Channels # 1 to #7	N/A	N/A	U
3328	112	SSM_Chan#Sample30	Sample 30 from Channels # 1 to #7	N/A	N/A	U
3440	112	SSM_Chan#Sample31	Sample 31 from Channels # 1 to #7	N/A	N/A	U
3552	112	SSM_Chan#Sample32	Sample 32 from Channels # 1 to #7	N/A	N/A	U
3664	112	SSM_Chan#Sample33	Sample 33 from Channels # 1 to #7	N/A	N/A	U
3776	112	SSM_Chan#Sample34	Sample 34 from Channels # 1 to #7	N/A	N/A	U

Start Bit	Bit Size	Mnemonic Name	Description	Units or State Value	Conversion Coefficients (formula or C5,C4,C3,C2,C1,C0) or State Name	Data Type
3888	112	SSM_Chan#Sample35	Sample 35 from Channels # 1 to #7	N/A	N/A	U
4000	112	SSM_Chan#Sample36	Sample 36 from Channels # 1 to #7	N/A	N/A	U
4112	112	SSM_Chan#Sample37	Sample 37 from Channels # 1 to #7	N/A	N/A	U
4224	112	SSM_Chan#Sample38	Sample 38 from Channels # 1 to #7	N/A	N/A	U
4336	112	SSM_Chan#Sample39	Sample 39 from Channels # 1 to #7	N/A	N/A	U
4448	112	SSM_Chan#Sample40	Sample 40 from Channels # 1 to #7	N/A	N/A	U
4560	112	SSM_Chan#Sample41	Sample 41 from Channels # 1 to #7	N/A	N/A	U
4672	112	SSM_Chan#Sample42	Sample 42 from Channels # 1 to #7	N/A	N/A	U
4784	112	SSM_Chan#Sample43	Sample 43 from Channels # 1 to #7	N/A	N/A	U
4896	112	SSM_Chan#Sample44	Sample 44 from Channels # 1 to #7	N/A	N/A	U
5008	112	SSM_Chan#Sample45	Sample 45 from Channels # 1 to #7	N/A	N/A	U
5120	112	SSM_Chan#Sample46	Sample 46 from Channels # 1 to #7	N/A	N/A	U
5232	112	SSM_Chan#Sample47	Sample 47 from Channels # 1 to #7	N/A	N/A	U
5344	112	SSM_Chan#Sample48	Sample 48 from Channels # 1 to #7	N/A	N/A	U
5456	112	SSM_Chan#Sample49	Sample 49 from Channels # 1 to #7	N/A	N/A	U
5568	112	SSM_Chan#Sample50	Sample 50 from Channels # 1 to #7	N/A	N/A	U
5680	112	SSM_Chan#Sample51	Sample 51 from Channels # 1 to #7	N/A	N/A	U
5792	112	SSM_Chan#Sample52	Sample 52 from Channels # 1 to #7	N/A	N/A	U
5904	112	SSM_Chan#Sample53	Sample 53 from Channels # 1 to #7	N/A	N/A	U
6016	112	SSM_Chan#Sample54	Sample 54 from Channels # 1 to #7	N/A	N/A	U
6128	112	SSM_Chan#Sample55	Sample 55 from Channels # 1 to #7	N/A	N/A	U
6240	112	SSM_Chan#Sample56	Sample 56 from Channels # 1 to #7	N/A	N/A	U
6352	112	SSM_Chan#Sample57	Sample 57 from Channels # 1 to #7	N/A	N/A	U
6464	112	SSM_Chan#Sample58	Sample 58 from Channels # 1 to #7	N/A	N/A	U
6576	112	SSM_Chan#Sample59	Sample 59 from Channels # 1 to #7	N/A	N/A	U
6688	112	SSM_Chan#Sample60	Sample 60 from Channels # 1 to #7	N/A	N/A	U
6800	112	SSM_Chan#Sample61	Sample 61 from Channels # 1 to #7	N/A	N/A	U
6912	112	SSM_Chan#Sample62	Sample 62 from Channels # 1 to #7	N/A	N/A	U
7024	112	SSM_Chan#Sample63	Sample 63 from Channels # 1 to #7	N/A	N/A	U
7136	112	SSM_Chan#Sample64	Sample 64 from Channels # 1 to #7	N/A	N/A	U
7248	112	SSM_Chan#Sample65	Sample 65 from Channels # 1 to #7	N/A	N/A	U
7360	112	SSM_Chan#Sample66	Sample 66 from Channels # 1 to #7	N/A	N/A	U
7472	112	SSM_Chan#Sample67	Sample 67 from Channels # 1 to #7	N/A	N/A	U
7584	112	SSM_Chan#Sample68	Sample 68 from Channels # 1 to #7	N/A	N/A	U
7696	112	SSM_Chan#Sample69	Sample 69 from Channels # 1 to #7	N/A	N/A	U
7808	112	SSM_Chan#Sample70	Sample 70 from Channels # 1 to #7	N/A	N/A	U
7920	112	SSM_Chan#Sample71	Sample 71 from Channels # 1 to #7	N/A	N/A	U
8032	112	SSM_Chan#Sample72	Sample 72 from Channels # 1 to #7	N/A	N/A	U
8144	112	SSM_Chan#Sample73	Sample 73 from Channels # 1 to #7	N/A	N/A	U
8256	112	SSM_Chan#Sample74	Sample 74 from Channels # 1 to #7	N/A	N/A	U
8368	112	SSM_Chan#Sample75	Sample 75 from Channels # 1 to #7	N/A	N/A	U
8480	112	SSM_Chan#Sample76	Sample 76 from Channels # 1 to #7	N/A	N/A	U
8592	112	SSM_Chan#Sample77	Sample 77 from Channels # 1 to #7	N/A	N/A	U
8704	112	SSM_Chan#Sample78	Sample 78 from Channels # 1 to #7	N/A	N/A	U

Check the JPSS MIS Server at https://jpssmis.gsfc.nasa.gov/frontmenu_dsp.cfm to verify that this is the correct version prior to use.

Start Bit	Bit Size	Mnemonic Name	Description	Units or State Value	Conversion Coefficients (formula or C5,C4,C3,C2,C1,C0) or State Name	Data Type
8816	112	SSM_Chan#Sample79	Sample 79 from Channels # 1 to #7	N/A	N/A	U
8928	112	SSM_Chan#Sample80	Sample 80 from Channels # 1 to #7	N/A	N/A	U
9040	16	SSM_Spare2	Spare	N/A	N/A	U
9056	1	SSM_StatFlags(CT Over-Speed Trip)	SSM Status Flags(X-Track Over-Speed Trip)	0 1	CT Assembly speed OK CT Assembly speed Unsafe	U
9057	1	SSM_StatFlags(Spare)	SSM Status Flags(Spare)	N/A	N/A	U
9058	1	SSM_StatFlags(Redundant Drv Relay Fault)	SSM Status Flags(Redundant Drive Relay Fault)	0 1	Relays OK Relay Dissconnect Failure	U
9059	1	SSM_StatFlags(Loss 8 Sec Sync Stat)	SSM Status Flags(Loss 8 Sec Sync Status)	0 1	Sync OK Sync Out	U
9060	1	SSM_StatFlags(IT Vel Comp Active/Idle)	SSM Status Flags(In-Track Velocity Compensation Act/Idle)	0 1	Enabled Disabled	U
9061	1	SSM_StatFlags(CT Axis Motor Winding Temp Go/No Go)	SSM Status Flags(X-Track Axis Motor Winding Temperature)	0 1	Temp OK Temp Not OK	U
9062	1	SSM_StatFlags(IT Axis Motor Winding Temp Go/No Go)	SSM Status Flags(In-Track Axis Motor Winding Temperature)	0 1	Temp OK Temp Not OK	U
9063	1	SSM_StatFlags(Primary Power Current Monitor Go/No Go)	SSM Status Flags(Primary Power Current Monitor Go/NoGo)	0 1	Pos 28 V OK Pos 28 V Not OK	U
9064	2	SSM_StatFlags(SSM Mode Status)	SSM Status Flags(SSM Mode Status)	00 01 10 11	Safe Normal EEPROM Upload Scan Interrupt Mode	U
9066	1	SSM_StatFlags(Motion Comp Active/Idle)	SSM Status Flags(Motion Compensation Act/Idle)	0 1	Enabled Disabled	U
9067	1	SSM_StatFlags(CT Motor Drv Overload Trip)	SSM Status Flags(X-Track Motor Drive Overload Trip)	0 1	Current OK Current Not OK	U
9068	1	SSM_StatFlags(IT Motor Drv Overload Trip)	SSM Status Flags(In-Track Motor Drive Overload Trip)	0 1	Current OK Current Not OK	U
9069	1	SSM_StatFlags(Loss 200ms Sync Stat)	SSM Status Flags(Loss 200ms Sync Status)	0 1	Sync OK Sync Out	U
9070	1	SSM_StatFlags(Motor Drvs On/Off)	SSM Status Flags(Motor Drives On/Off)	0 1	On Off	U
9071	1	SSM_StatFlags(CT Encoder Stat)	SSM Status Flags(X-Track Encoder Status)	0 1	Pulse Found No Pulse Found	U
9072	12	SSM_ErrFlags(Spare)	SSM Error Flags(Spare)	N/A	N/A	U
9084	1	SSM_ErrFlags(Tele Validity)	SSM Error Flags(Tlm Validity)	0 1	Invalid Valid	U
9085	1	SSM_ErrFlags(Cmd Proc Err)	SSM Error Flags(Cmd Processor Error)	0 1	False True	U
9086	2	SSM_ErrFlags(Packet Reception Err)	SSM Error Flags(Packet Reception Error)	00 01 10 11	No Error CRC Error Invalid Packet Format Invalid Cmd Word	U

Check the JPSS MIS Server at https://jpssmis.gsfc.nasa.gov/frontmenu_dsp.cfm to verify that this is the correct version prior to use.

4.2.4.6 Memory Dump

The Memory Dump Packet (APID 1397) is initiated in response to a dump command. (Note: the instrument must be in safe mode before data can be dumped.) If the requested size of memory to dump is too large for the intended peak throughput of a single packet of (32768 bytes), then it will be sent in multiple packets at 200ms increments. The Secondary Header timestamps increase in multiple-packet dumps since each packet is stamped with the time of its generation. Dumps of the SSM and IM EEPROM are limited in size to 128 bytes; multiple requests are necessary for larger dumps. The following types of memory dumps may be requested:

- IFC SRAM
- Boot ROM
- Program EEPROM
- BAE PCI Bridge Chip
- Aux Bridge Chip
- Housekeeping CCA
- Signal Processor LW
- Signal Processor MW
- Signal Processor SW
- Firewire CCA A
- Firewire CCA B
- APID Table
- SSM EEPROM
- IM EEPROM
- 1394 Fault Log

All memory dumps that include SRAM DMA buffers will contain 0xCC where the DMA buffer memory would be. If the memory type dumped is anything other than SRAM, Boot ROM, Program EEPROM or SSM/IM EEPROM, then the Start Address and Data Size fields are irrelevant and the memory dump packet is filled with static, predefined information for each module. The contents of the memory dump packet under these conditions are defined in the Appendix.

Check the JPSS MIS Server at https://jpssmis.gsfc.nasa.gov/frontmenu_dsp.cfm to verify that this is the correct version prior to use.

CrIS Memory Dump Packet **VERSION B** **DATE**

	PACKET PRIMARY HEADER							SECONDARY HEADER	User Data Field									
	Verson No.	Packet Identification			Packet Sequence		Packet Length		CrIS Memory Dump Packet Data									
		Type Indicator	Sec Hdr Flag	APID	Sequence Flags	Sequence Count		Start of Scan	PCE App FSW Version	Instrument ID	Not Used	Memory Dump Type	Memory Dump Sequence ID	Memory Dump Sequences Total	Memory Dump Address	Memory Dump Data		
Bits	3	1	1	11	2	14	16	64	11	5	8	8	8	8	32	up to 262144	up to	TOTAL 262336
Octets	2				2		2	8	2		1	1	1	1	4	up to 32768	up to	32792
Value	000	0	1	0x575	11	varies	varies	varies	varies	varies	zeros	varies	varies	varies	varies	varies		

Telemetry Packet

Secondary Header Present

Figure 4.2-16. CrIS Memory Dump Packet Format

Table 4.2-13. CrIS Memory Dump Packet User Data Fields

Start Bit	Bit Size	Mnemonic Name	Description	Units or State Value	Conversion Coefficients (formula or C5,C4,C3,C2,C1,C0) or State Name	Data Type
0	11	MemoryDump_PCEAppFswVer	PCE App FSW Version	N/A	N/A	U
11	5	MemoryDump_InstrumentID	Instrument ID	N/A	N/A	U
16	8	MemoryDump_Spare	Spare	N/A	N/A	U
				1	IFC SRAM	
				2	Boot RAM	
				3	Program EEPROM	
				4	BAE PCI Bridge Chip	
				5	Aux Bridge Chip	
				6	Housekeeping CCA	
				7	Signal Processor LW	
				8	Signal Processor MW	
				9	Signal Processor SW	
				10	Firewire CCA A	
				11	Firewire CCA B	
				12	APID Table	
				13	SSM EEPROM	
				14	IM EEPROM	
24	8	MemoryDump_Type	Memory dump type	15	1394 Fault Log	U
32	8	MemoryDump_SeqID	Memory dump sequence ID	N/A	N/A	U
40	8	MemoryDump_SeqTotal	Memory dump sequence total	N/A	N/A	U
48	32	MemoryDump_Address	Memory dump address	N/A	N/A	U
80	up to 262144	N/A	Memory dump data (up to 32K Bytes)	N/A	N/A	U

Check the JPSS MIS Server at https://jpssmis.gsfc.nasa.gov/frontmenu_dsp.cfm to verify that this is the correct version prior to use.

4.2.4.7 Test Packet

When commanded, CrIS will generate one fixed Test packet every scan until disabled by command. The Test packet consists of a packet primary header with APID 1398, a secondary header, two octets of CrIS flight software version number and instrument identification number and a fixed data pattern of 240 ‘CC’ hex characters for a total of 256 bytes. Figure 4.2-17 shows the format of the CrIS Test Packet.

	PACKET PRIMARY HEADER							SECONDARY HEADER	User Data Field			
	Verson No.	Packet Identification			Packet Sequence		Packet Length	Start of Scan	PCE App FSW Version	Instrument ID	Repeating Test Pattern	TOTAL
		Type Indicator	Sec Hdr Flag	APID	Sequence Flags	Sequence Count						
Bits	3	1	1	11	2	14	16	64	11	5	1920	2048
Octets	2				2		2	8	2		240	256
Value	000	0	1	0x576	11	varies	0x00F9	varies	varies	varies	0xCCCC	

Telemetry Packet

Secondary Header Present

Figure 4.2-17. CrIS Test Packet Format

4.3 OMPS

4.3.1 Introduction

The information in this section should be considered a high-level overview of the OMPS instrument. Please see the following OMPS reference documentation for complete details: OMPS On-Orbit Operators Manual (OOOM) - IN0092-132, OMPS Post-Delivery and On-Orbit Maintenance Manual (PDOOMM) - IN0092-133, OMPS Test, Handling and Operations Contraints Manual - IN0092-131, OMPS Command & Telemetry Handbook (C&T) - IN0092-115, OMPS Software Users Manual (SUM) - IN0092-701, and OMPS Training Materials - IN0092-130 and IN0092-171.

The Ozone Mapping and Profiler Suite (OMPS) provides NPP users with data products describing the vertical, horizontal and temporal distribution of ozone in the Earth's atmosphere. Two sensors -- one nadir viewing and one limb viewing -- observe ultraviolet and visible light from 250 nm to 1000 nm. Unlike the other NPP sensors, the OMPS does not scan across nadir. Its nadir instrument has a fixed field of view 110º x 0.3º centered at nadir. The limb-viewing instrument has three fixed fields of view directed in the anti-velocity direction. Charge-coupled devices (CCDs) within the sensors integrate the spectral and spatial distribution of radiation from 250 nm to 1000 nm.

Mission data obtained from the OMPS produce the following NPP EDR:

- Ozone Total Column Ozone

The following VIIRS and CrIS EDRs are used in generating the OMPS EDRs:

- Cloud Top Pressure (CrIS)
- Temperature Profile (CrIS)
- Snow Fraction (VIIRS)
- Ice Surface Temperature (VIIRS)

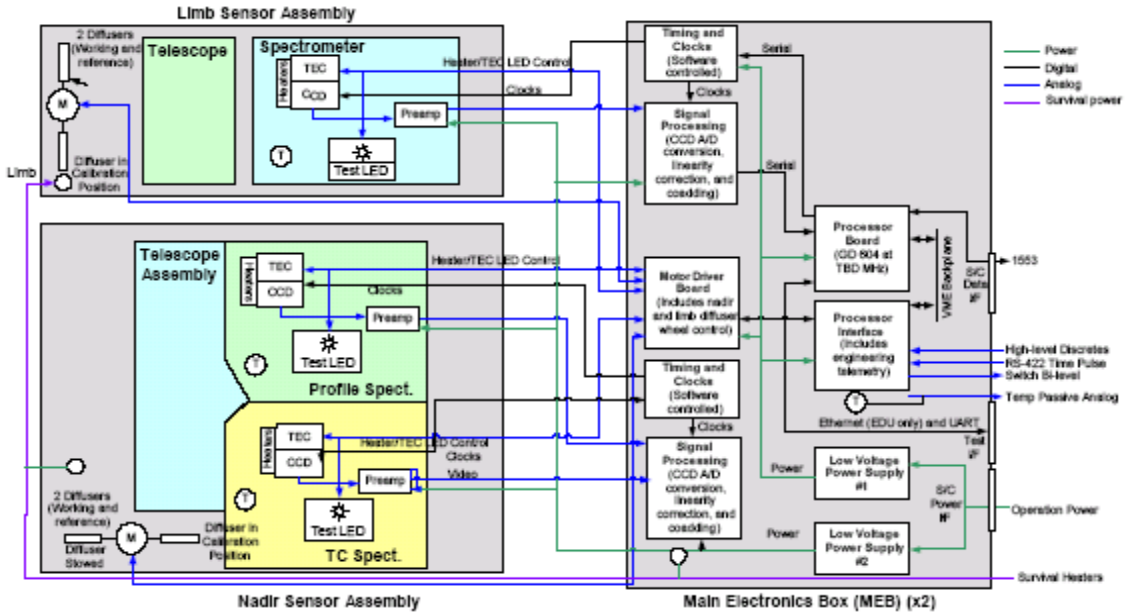

Figure 4.3-1. OMPS NPP Flight Configuration

4.3.2 Instrument Function

The OMPS hardware segment consists of the Limb Sensor, Nadir Sensor, and Main Electronics Boxes (MEB). A block diagram of the OMPS Flight Hardware segment is seen in Figure 4.3-1.

The Nadir Sensor contains two spectrometers to determine the total column ozone and ozone profile concentrations. The two spectrometers share a common telescope that has a 110 deg x 0.3 deg field-of-view. The total ozone spectrometer uses the full FOV of the telescope and the ozone profile spectrometer uses only a portion of the telescopes FOV.

The Limb Sensor contains a single spectrometer and telescope for determining ozone profiles of higher resolution than the Nadir Sensor. The Limb spectrometer uses three slits so that 3 ozone profiles spaced 250 km apart can be determined.

Each spectrometer uses a 364 x 780 pixel CCD to obtain the ozone data. Only a portion of each CCD is transmitted in the science and the calibration packets. Thermal Electric Coolers (TECs) and heaters maintain the CCDs at a stable temperature.

The CCD integration times and the charge transfer from the CCD to the Analog-to-Digital Converter (ADC) are controlled using a Timing Pattern Generator (TPG). Each OMPS Sensor has its own dedicated TPG. Integration times, pixel binning, and pixel sampling are programmable via uploadable tables. Timing Pattern tables for the TPGs are resident in the MEB static memory and are downloaded to the TPGs after Flight Software has been commanded to do so. Multiple TPG programs can be resident in the MEB to allow for multiple in-flight imaging activities.

Check the JPSS MIS Server at https://jpssmis.gsfc.nasa.gov/frontmenu_dsp.cfm to verify that this is the correct version prior to use.

Note: Pixel binning and sub-sampling are programmable via uploadable tables - but are not part of the TPG. Sub-sample/binning are handled by the binning task within the OMPS FSW running on the SBC.

Both the Limb Sensor and the Nadir sensor have calibration LEDs and calibration mechanisms. The nadir sensor calibration mechanism can move one of two reflective diffusers into the OMPS FOV to measure solar irradiance. Likewise, the limb calibration mechanism can move one of two transmissive diffusers into the limb FOV to measure solar irradiance. LEDs and diffusers are used to calibrate the linearity of the CCDs and image-processing electronics.

The MEB contains the OMPS CPU, ADCs, TPGs, housekeeping and power supply boards. The MEB provides the electrical interface to the spacecraft. The housekeeping board interfaces with the Limb and Nadir Sensors and provides additional telemetry generated in the MEB itself.

4.3.3 Modes and Packet Structure

"Modes" are distinct, commandable states for the OMPS instrument. "Activities" are sequences of operations that are designed to be executed from a particular mode.

The OMPS implements the following modes.

- OFF Mode
- SURVIVAL Mode
- BOOT Mode
- SAFE-HOLD Mode
- DECON Mode
- OPERATE Mode

The normal transition from full off to full operational mode progresses through the BOOT, SAFE-HOLD, and DECON modes, where certain early orbit checkout activities occur. The SURVIVAL MODE is used for abnormal conditions. Routine science and calibration activities are performed in the OPERATE mode, including autonomous functionality. The OMPS does not have a separate calibration mode, but performs calibrations as part of OPERATE mode as discussed below. Figure 4.3-2 is the top-level mode transition diagram for the OMPS.

Table 4.3-1 lists all the X-band unique packets output by the OMPS.

Table 4.3-1. OMPS Mission Data Packet Types

VC ID	$APID_{10}$	Telemetry Packet Name	Data Rate (bps)		Downlink		Packet Size (octets), Note 2
			Operational	Diagnostic	HRD	SMD	
0	544	Housekeeping, Note 1	Note 1	Note 1	✓	✓	Note 1
0	545	LEO&A Housekeeping, Note 1	Note 1	Note 1	✓	✓	Note 1

Check the JPSS MIS Server at https://jpssmis.gsfc.nasa.gov/frontmenu_dsp.cfm to verify that this is the correct version prior to use.

VC ID	$APID_{10}$	Telemetry Packet Name	Data Rate (bps)		Downlink		Packet Size (octets), Note 2
			Operational	Diagnostic	HRD	SMD	
13	546	Test	--	409.6		✓	256
21	549	Dwell Telemetry	--	244		✓	244
0	550	Diagnostic - FSW Bootup Status Frame	Note 1	Note 1	✓	✓	Note 1
21	556	Table/Memory Dump	--	Varies		✓	<= 4219288
11	560	Nadir Total Column Earth View	Varies	--	✓	✓	(Note 3)
11	561	Nadir Profiler Earth View	Varies	--	✓	✓	(Note 3)
12	562	Limb Profiler Long Exposure Earth View	Varies	--		✓	(Note 3)
12	563	Limb Profiler Short Exposure Earth View	Varies	--		✓	(Note 3)
11	564	Nadir Total Column Calibration RDR	Varies	--	✓	✓	Varies (Note 3)
11	565	Nadir Profiler Calibration	Varies	--	✓	✓	Varies (Note 3)
12	566	Limb Profiler Calibration	Varies	--		✓	Varies (Note 3)
11	576	Diagnostic Nadir Total Column Earth View	--	Varies	✓	✓	(Note 3)
13	577	Diagnostic Nadir Profiler Earth View	--	Varies		✓	(Note 3)
13	578	Diagnostic Limb Long-Exposure	--	Varies		✓	(Note 3)
13	579	Diag Limb Profiler Short Exposure	--	Varies		✓	(Note 3)
13	580	Diagnostic Nadir Total Column Calibration	--	Varies		✓	Varies (Note 3)
13	581	Diagnostic Nadir Profiler Calibration	--	Varies		✓	Varies (Note 3)
13	582	Diagnostic Limb Profiler Calibration	--	Varies		✓	Varies (Note 3)

1. Documented in the OMPS Command and Telemetry Handbook (C&T) and OMPS Software Users Manual (SUM). See note on OMPS documentation at the start of the OMPS Introduction Section.
2. Packet sizes greater than the CCSDS maximum of 65542 are grouped packets. See the respective sections for detailed information.
3. The size of all OMPS science, calibration and diagnostic packets is configurable and not set at one value. The full available unbinned CCD requires multiple grouped packets to be sent. The maximum size of the packets including all primary and secondary headers in the multiple grouped packets is documented in the OMPS C&T and SUM, per Note 1 above.

4.3.3.1 Off Mode

In the instrument Off mode, the OMPS receives no external power. This includes primary and redundant survival heater power, and operational power. No mission data is output in Off Mode. There is no communication with the OMPS instrument in this mode. In this mode, the only OMPS telemetry (TLM) that is available comes from passive temperature sensors that pass directly to the spacecraft. The instrument is in Off mode during launch and in the worst-case spacecraft power crisis situations once on orbit.

4.3.3.2 Survival Mode

In this mode the OMPS Primary and Redundant survival heaters are enabled. Enabling OMPS survival heaters is a spacecraft function and does not involve sending commands to the OMPS instrument. Thermostats control the turn-on and turn-off of survival power to the survival heaters. There is no communication with the OMPS instrument in this mode. In this mode, the only OMPS TLM that is available comes from passive temperature sensors that pass directly to the spacecraft. OMPS must be transitioned to this mode no later than 30 minutes after launch.

4.3.3.3 Boot Mode

In this mode the spacecraft supplies operational power to the OMPS instrument. Supplying operational power to the OMPS instrument is a spacecraft function and does not involve sending commands to the OMPS instrument. When OMPS operational power is initially supplied, bootstrap code executes and OMPS transitions itself to BOOT mode. Once in BOOT mode, OMPS FSW generates nominal Health and Status (HSD) telemetry and is ready to receive commands.

4.3.3.4 Safe Hold Mode

SAFE-HOLD mode is the nominal protected, low-power mode for the OMPS instrument. This is the mode into which OMPS will autonomously transition itself in the event of a serious fault or limit violation – or from a spacecraft requested “safing” operation. OMPS FSW generates nominal Health and Status (HSD) telemetry in this mode, unless commanded to perform an Aliveness activity, during which Diagnostic packets are generated.

4.3.3.5 Decon Mode

DECON mode is a special mode designed primarily for early-orbit operations – and for routine orbit correction events. DECON mode – short for decontamination – is identical to OMPS OPERATE mode (see below), except that the Nadir and Limb diffuser wheel assemblies remain in their closed/home positions. The purpose of this mode is to configure the OMPS instrument in a safe, warm and operationally functional configuration during (1) the NPP observatory “outgassing” phase of early-orbit operations, and during (2) routine orbit correction events. In this mode OMPS is fully capable of generating internal calibration data. It is expected that OMPS will remain in this mode for approximately the first 30 days after launch. OMPS FSW generates nominal Health and Status (HSD) telemetry and Diagnostic science packets in this mode, unless commanded to perform the Functional and/or Darks activities, during which Calibration packets are generated.

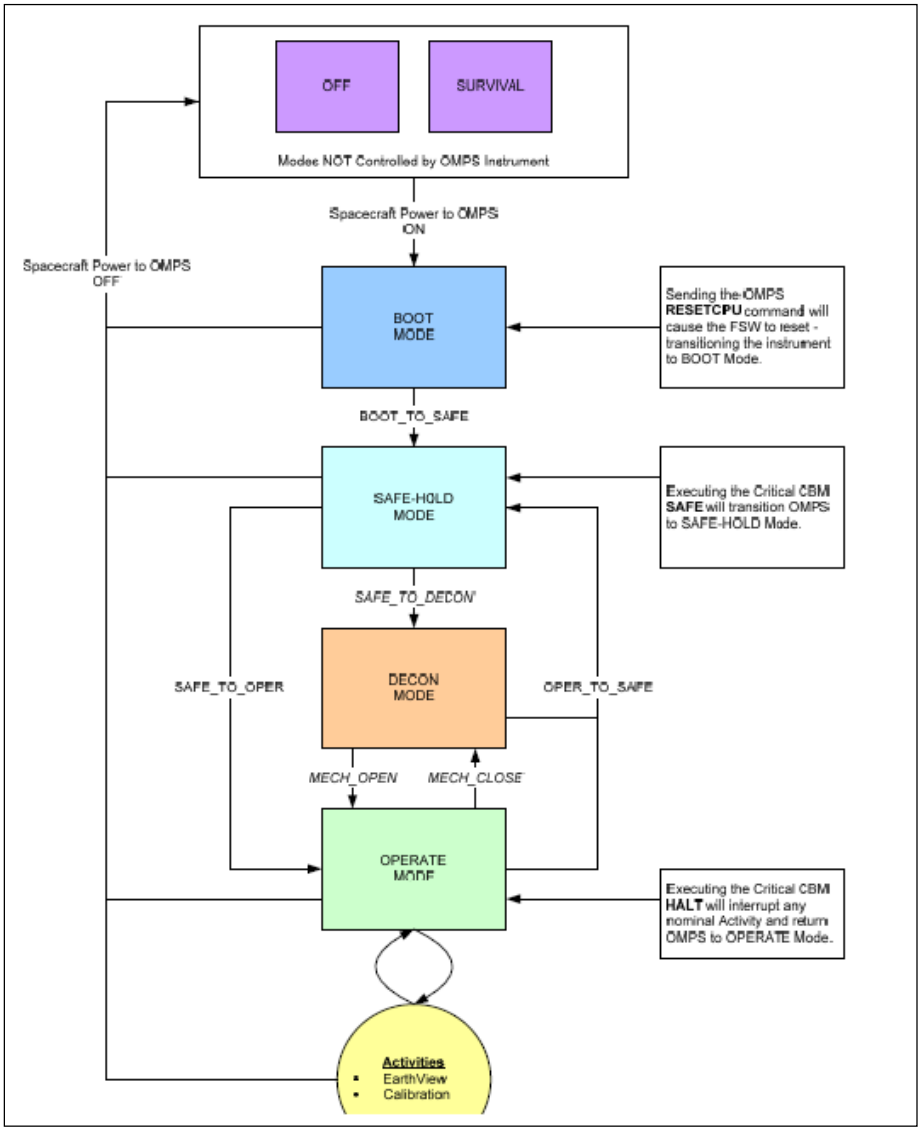

Figure 4.3-2. OMPS Modes and Mode Transitions

4.3.3.6 Operate Mode

OPERATE mode is the nominal configuration of the OMPS instrument during routine operations. In OPERATE mode, the Nadir and Limb sensors are powered on, the FPA window heaters are powered on, the FPA TECs are powered on and actively maintaining CCD temperatures at their nominal set points, and the Nadir and Limb diffuser wheel assemblies are in their open positions. In this mode OMPS is fully capable of generating science and calibration data.

The frequency and scheduling of OMPS routine science and calibration activities is configurable -- and under the control and management of the OMPS science and calibration teams.

4.3.4 Mission Data

The OMPS telemetry transferred via the MIL-STD-1553B bus consists of grouped packets that use the Consultative Committee for Space Data Systems (CCSDS) Path Protocol Data Unit format described in CCSDS 701.0-B-2. (Information on OMPS CCSDS packets is documented in the OMPS Command and Telemetry Handbook (C&T) and OMPS Software Users Manual (SUM). See note on OMPS documentation at the start of the OMPS Introduction Section.) The first packet of a group has a primary header containing three 16-bit words (one 16-bit word = 2 octets) and a secondary header containing a four-word UTC time code, a one-word field denoting the number of packets in the group and a spare field. The OMPS formats the time of packet generation consistent with Table 4.1-3 in the secondary header. The time in the secondary header is not the time of observation for packets with CCD data; see the explanation below to derive the observation time from the secondary header. The middle and last packets of a group have only the three-word primary header. Because CCD images can be too large for a single group of 256 packets, the OMPS packets have an OMPS Header inside the User Data Zone of the first packet in each group to work around the CCSDS 8 bit sequence counter limitation. The OMPS Header contains the version number, the number of grouped packets remaining in the CCD image (Continuation Count), and a Continuation Flag set to 0 if the packet is the first of a group and set to 1 if the first packet is not the first of a multiple packet group. The largest OMPS images require five groups of packets. For these packets, the Continuation Count in first packet of the first group is set to 4 and the Flag is set to 0. The Continuation Count in the first packet of the second group is set to 3, but the flag is set to 1. The Continuation keeps decreasing to 0 by the fifth and final first packet and the Continuation Flag remains 1 in those packets. The CCSDS packet sequence counter increments continuously, so the first packet of the second group will have a CCSDS sequence count one greater than the last packet of the first group. Since the data in multiple grouped packets belong to a single CCD image, the secondary header timestamps are identical in all of the first packets in a multiple grouped packet. All fields in the OMPS data packets are big endian.

The OMPS Science, Calibration, and Diagnostic packet contain image data. The OMPS CCD image sensor is documented in more detail elsewhere but is summarized here for reference and to aid in understanding the generation and packaging of the OMPS X-band telemetry. The CCD has two mirror image halves that operate identically. Each half has a photo sensitive region extending 340 columns by 370 rows and a light shielded region 340 columns by 390 rows large. The extra 20 rows in the light shielded region are over-scanned rows containing only the smear signal and are used to subtract image transfer smear signal from the main image after the entire contents have been read out. To accommodate the on-chip charge-to-voltage conversion amplifiers, the serial CCD needs to be 12 pixels longer on each end than the CCD size. Therefore, the total length of a single line as read off from the imager will be 364 (i.e., 12 + 340 + 12) pixels. The extra 24 pixels (12 leading + 12 lagging) are used during calibration to determine the zero-input offset of the system. They are not currently included in the downlinked Nadir data during normal science operations.

Rows and columns are defined relative to the physical structure of the CCD and relate to the operation of the CCD. Since the OMPS CCD has two mirror image halves the output amplifiers are on opposite ends. The output amplifiers are connected by the readout CCD register. The rows and columns are defined relative to the output amplifiers and readout CCD register. The

Check the JPSS MIS Server at https://jpssmis.gsfc.nasa.gov/frontmenu_dsp.cfm to verify that this is the correct version prior to use.

rows are parallel to the readout CCD register. The rows are transferred as a whole into the readout CCD register by a parallel transfer. The columns are perpendicular to the readout CCD register. The columns are read out one at a time through serial transfers of the readout CCD register.

Every OMPS image comes from an image profile. The image profile number and any associated timing pattern, sample table, linearity correction table, and gain correction table are reported in OMPS image packets. The OMPS uses sample tables to bin CCD pixels into macro-pixels and to exclude bad pixels. If all the CCD pixels in a given macro-pixel go bad on orbit, the number of macro-pixels in the OMPS CCD data may be reduced, changing the size of the OMPS CCD data within any of the OMPS science, calibration, and diagnostic packets. It is also possible for the packets to contain all CCD pixels with no binning by a sample table. When a sample table is not used, the CCD data are framed in the packet by four-octet Hardware (HW) Start and End Tags, defined in Table 4.3-2. The CCD images described below are those baselined by OMPS at the time of delivery for NPP integration. The size of the packets can be expected to change on-orbit due to changes in the sample table. Since calibration and diagnostic packets contain multiple types of images, each with a different size, a generic description is given for them and the size is left indefinite.

Table 4.3-2. OMPS Hardware Tags

Image Type	APIDs	Start Tag	End Tag
Nadir Total Column (TC)	560, 564, 576, 580	0x81000000	0xC1000000
Nadir Profiler (NP)	561, 565, 577, 581	0x82000000	0xC2000000
Limb Profiler Short (LPS)	563, 566, 579, 582	0x91000000	0xD1000000
Limb Profiler Long (LPL)	562, 578	0x92000000	0xD2000000

Check the JPSS MIS Server at https://jpssmis.gsfc.nasa.gov/frontmenu_dsp.cfm to verify that this is the correct version prior to use.

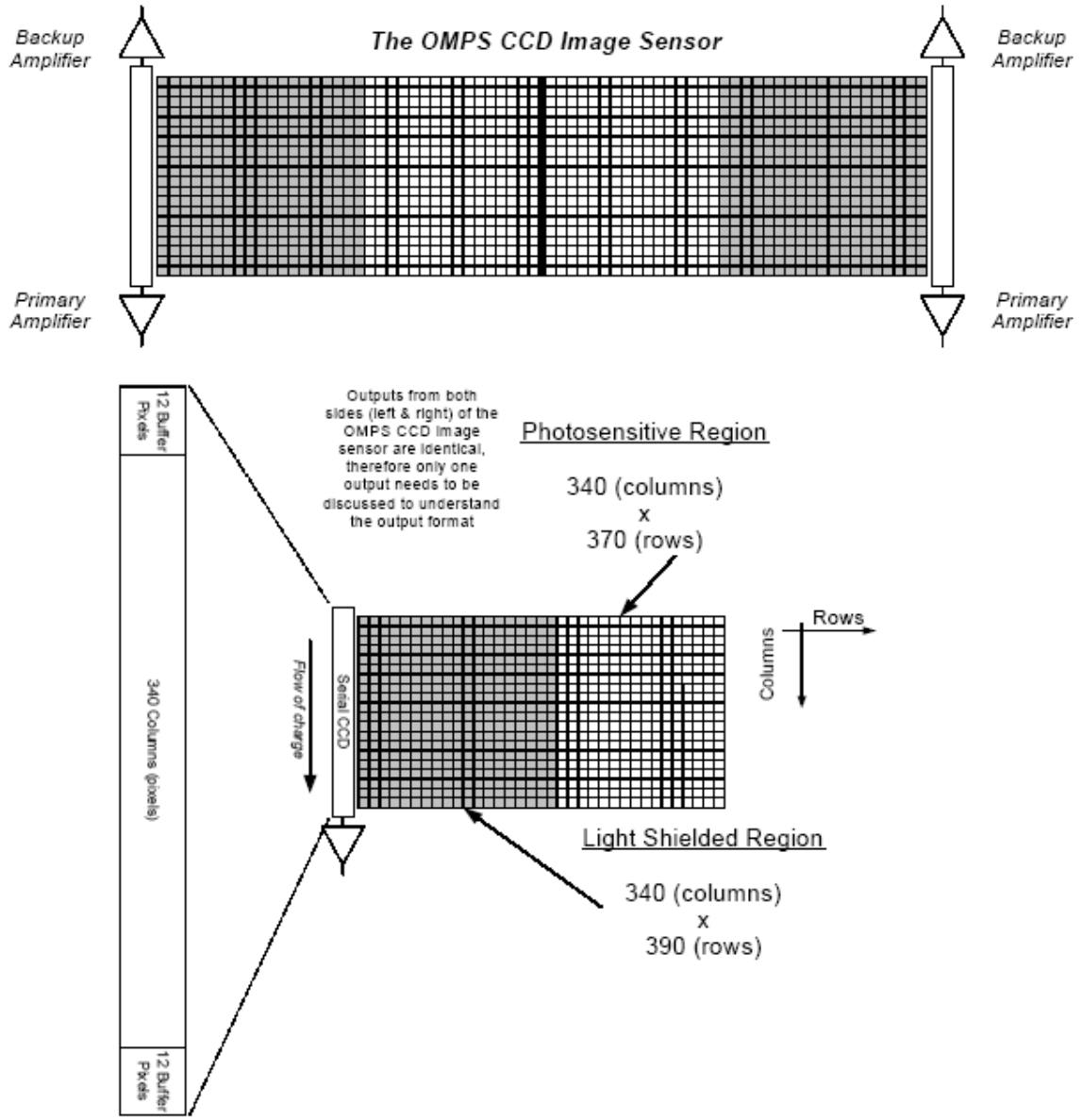

Figure 4.3-3. OMPS CCD Block Diagram

Table 4.3-3. OMPS Timestamp Offset

APID	Description	Profile IDs (Note 2)	Timing Pattern IDs (Note 2)	Offset per image (ms)
560	NTC EV	0	80	8727.6
561	NP EV	0	80	39437.7
562	LPL EV	0	80	19959.7
563	LPS EV	0	80	18336.7
564	TC Solar	21, 22, 23, 24, 25, 26, 27	87	6047.9
564	TC Lamp FF	16	85	Note 1
564	TC Lamp ST	18	86	Note 1
564	TC Dark 1 FF	2	82	Note 1
564	TC Dark Coadd FF	11	84	Note 1
565	NP Solar	20	92	5779.3
565	NP Lamp FF	15	90	Note 1
565	NP Lamp ST	17	91	Note 1
565	NP Dark 1 FF	1	81	Note 1
565	NP Dark Coadd FF	10	89	Note 1
566	LP Solar	20,21,22	125	8381.7
566	LP Lamp FF	15	123	Note 1
566	LP Lamp ST	16	124	Note 1
566	LPL Dark 1 FF	1	121	Note 1
566	LPS Dark 1 FF	1	121	Note 1
566	LPL Dark COADD FF	10	122	Note 1
566	LPS Dark COADD FF	10	122	Note 1
576	NTC EV Diag	5	80	Note 1
577	NP EV DIag	5	80	Note 1
578	LPL EV Diag	5	80	Note 1
579	LPS EV Diag	5	80	Note 1
580	NTC Cal Diag	8	83	Note 1
580	Diag NTC FF	7	82	Note 1
580	Diag NTC Dark Cal	31	84	Note 1
580	Diag NTC LED Cal FF	36	85	Note 1
580	Diag NTC LED Cal ST	38	86	Note 1
580	Diag NTC Solar Cal	41, 42, 43, 44, 45, 46, 47	87	Note 1
581	NP Cal Diag	8	83	Note 1
581	Diag NP FF	6	81	Note 1
581	Diag NP Dark Cal	30	89	Note 1
581	Diag NP LED FF	35	90	Note 1
581	Diag NP LED ST	37	91	Note 1
581	Diag NP Solar Cal	40	92	Note 1
582	Diag LP FF	6	121	Note 1
582	Diag LP Dark Cal	30	122	Note 1
582	Diag LP LED Cal FF	35	123	Note 1
582	Diag LP LED Cal ST	36	124	Note 1
582	Diag LP Solar Cal	40, 41, 42	125	Note 1

Note 1: OMPS On-Orbit Operator's Manual contains further timing details for the values above, but does not contain timing information on the Lamp and Dark images.

Check the JPSS MIS Server at https://jpssmis.gsfc.nasa.gov/frontmenu_dsp.cfm to verify that this is the correct version prior to use.

Note 2: The Profile IDs and Timing Pattern IDs in this table represent the configuration of OMPS at the time of delivery to NPP (Dec, 2008). Additional profiles and timing patterns have since been developed and delivered to the OMPS science and cal-val teams. The product suite (profiles, timing patterns) routinely used on-orbit can be dynamic and is no longer consistent with the contents of this table. Please contact the NASA Ozone PEATE for up-to-date information.

A timestamp for each image is present in two separate fields in each OMPS image packet: The Start of Scan field of the packet secondary header and the Last_IMG TLM set in the first packet before the CCD data. This timestamp does not correspond to the start of observation for the image, but instead corresponds to a time after all image data has been observed and transferred into the processor. In order to correctly geolocate and use the image data in ground processing, the start of image time must be used. Table 4.3-3 provides the offset in ms from the timestamps in the AP to the start of observation for the image. The data is organized by APID and Profile ID.

4.3.4.1 Science Data

The OMPS produces four science data packets described below: Nadir Total Column Earth View, Nadir Profile Earth View, Limb Profile Exposure #1 (aka L2, Long Exposure) and Limb Profile Exposure #2 (aka L1, Short Exposure). Each packet contains the health and status telemetry that is required to process the CCD data followed by CCD data.

4.3.4.1.1 Nadir Total Column

The Nadir TC uses both halves of the CCD. The TC image is aligned with the spectral dimension in columns (each column corresponds to a different spectral wavelength) and the spatial dimension in rows (each row corresponds to a different cross-track spatial location). The TC produces useful data from almost all of the CCD rows, but uses only about two thirds of the columns. The data is temporally co-added and binned in the spatial dimension. The number of pixels required in the spatial dimension is derived from the minimum horizontal cross-track FOV of 110 degrees. The number of pixels in the spectral dimension is based on the required spectral range, the spectral scale of the instrument, the uncertainty in the spectral scale, and the alignment of the focal plane to the spectral range. See “OMPS CCD Reference Figures” for explanation of the pixel binning and alignment.

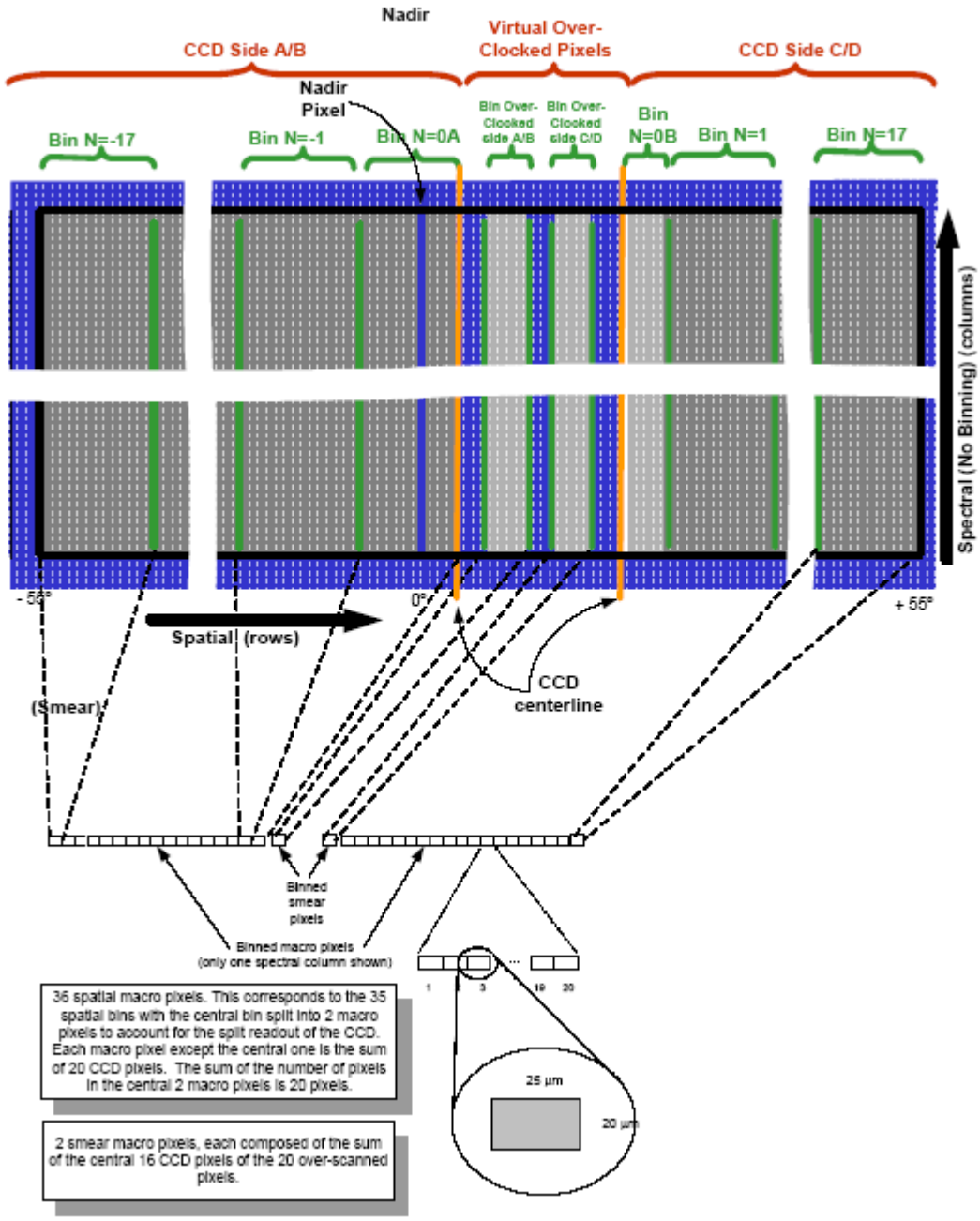

Figure 4.3-4. (For Reference Only) OMPS Total Column On-Orbit Windowing and Spatial Binning

The TC image is taken from the active area of the CCD image. Binning is performed in the spatial dimension centered about the nadir pixel column. The nadir row is determined based on instrument to spacecraft mounting alignment. There is one over- clocked bin generated for each half of the CCD. See Figure 4.3 4.

The OMPS outputs the Nadir Total Column packet (APID 560) in one grouped packet containing 30 CCSDS packets. The first and middle CCSDS packets are 1024 octets; the final packet is 444 octets for a total of 30140 octets. The first packet contains the 10 octet secondary header (time code, number of packets, and spare), the OMPS header (RDR version, number of grouped packets [Cont Count], and a flag indicating multiple grouped packets [Cont Flag]), 153 octets of engineering data, and the beginning of the CCD data. The CCD data in the user data fields totals 196x38 binned 32-bit pixels or 29792 octets.

	180	(30 x 6 octets primary header)
+	10	(octets secondary header)
+	4	(octets OMPS Header)
+	151	(octets engineering data)
+	29793	(octets science data plus pad byte)
=	30138	total octets.

The packet is generated approximately every 7.488 seconds. The structure of APID 560 is illustrated in Figure 4.3-5, Figure 4.3-6 and Figure 4.3-7 and the user data fields are listed in Table 4.3-4.

NOTE: The specific packet, octet, and macro-pixel sizes quoted in this paragraph should be considered notional -- as they are ultimately determined by the specific macro-pixel definitions within the version of the uploadable sample table that is used to generate this image data.

FIRST PACKET

	PACKET PRIMARY HEADER							SECONDARY HEADER			User Data Field					
	Verson No.	Packet Identification			Packet Sequence		Packet Length	Start of Scan	Packets in RDR - 1	Spare	OMPS Header			Engineering Data	Science	
		Type Indicator	Sec Hdr Flag	APID	Sequence Flags	Sequence Count					RDR Version	Cont Count -1	Cont Flag	Engineering Data Sections	CCD data (196x38 pixels) (start)	TOTAL
Bits	3	1	1	11	2	14	16	64	8	8	16	8	8	1208	6824	8192
Octets	2				2		2	8	1	1	2	1	1	151	853	1024
Value	000	0	1	0x230	01	varies	0x03F9	varies	0x1C	0x0	varies	varies	varies	varies	varies	

Telemetry Packet

Secondary Header Present

Engineering Data													
Sensor_Info (7)	Mech_SD (59)	Mech_Nadir (62)	Mech_Nadir_SD (73)	Nadir_SD (71)	Nadir_IMG_Profile_SD (50)	Nadir_TC_SD (66)	Curr_LED_SD (26)	Temp_Mech_SD (30)	Temp_Nadir_SD (28)	Volt_Mech_SD (42)	Temp_Nadir (24)	Temp_NP (36)	Temp_TC (35)
64	112	88	88	64	360	96	16	16	48	48	176	16	16
8	14	11	11	8	45	12	2	2	6	6	22	2	2
varies	varies	varies	varies	varies	varies	zeros	varies	varies	varies	varies	varies	varies	varies

Figure 4.3-5. OMPS Nadir Total Column First Packet Format

MIDDLE PACKET Qty. 28

	PACKET PRIMARY HEADER							User Data Field		
	Verson No.	Packet Identification			Packet Sequence		Packet Length	Science		
		Type Indicator	Sec Hdr Flag	APID	Sequence Flags	Sequence Count		CCD data (196 x 38 pixels) (middle)	TOTAL	TOTAL Middle Packets
Bits	3	1	1	11	2	14	16	8144	8192	229376
Octets	2				2		2	1018	1024	28672
Value	000	0	0	0x230	00	varies	0x03F9	varies		

Telemetry Packet

Middle Packet

Figure 4.3-6. OMPS Nadir Total Column Middle Packet Format

LAST PACKET

	PACKET PRIMARY HEADER							User Data Field			
	Verson No.	Packet Identification			Packet Sequence		Packet Length	Science			
		Type Indicator	Sec Hdr Flag	APID	Sequence Flags	Sequence Count		CCD data (196 x 38 pixels) (end)	Pad Byte	TOTAL	RDR TOTAL
Bits	3	1	1	11	2	14	16	3480	8	3536	241104
Octets	2				2		2	435	1	442	30138
Value	000	0	0	0x230	10	varies	0x01B3	varies	fixed		

Telemetry Packet

Last Packet

#NAME?

Figure 4.3-7. OMPS Nadir Total Column Last Packet Format

Check the JPSS MIS Server at https://jpssmis.gsfc.nasa.gov/frontmenu_dsp.cfm to verify that this is the correct version prior to use.

Table 4.3-4. OMPS Nadir Total Column Packet User Data Fields

Start Bit	Bit Size	Mnemonic Name	Description	Units OR State Value	Conversion Coefficients (formula or C5,C4,C3,C2,C1,C0) OR State Name	Data Type
0	16	CCSDS_RDR_VER	Version Number of RDR	N/A	N/A	U
16	8	CCSDS_CONT_COUNT	Number of segmented CCSDS packet sequences - 1	N/A	N/A	U
24	8	CCSDS_CONT_FLAG	Indicates if this CCSDS packet begins an RDR	N/A	N/A	U
32	8	SENSOR_ID	OMPS Sensor Identification (not for Dwell or FSW Bootup status)	N/A	N/A	U
40	8	FSW_VERSION	Flight Software Version Number (not for Dwell or FSW Bootup status) -- major version	N/A	N/A	U
48	8	FSW_VERSION	Flight Software Version Number (not for Dwell or FSW Bootup status) -- minor version	N/A	N/A	U
56	2	MEB_BOOT_IMG_ID	Boot Image Identifier (not for Dwell or FSW Bootup status)	0 1 2	Not Used As-Launched Modifiable	U
58	5	MEB_SBC_ID	Single Board Computer Identifier (not for Dwell or FSW Bootup status)	N/A	N/A	U
63	1	MEB_SIDE	Active MEB Side (not for Dwell or FSW Bootup status)	0 1	MEB2 MEB1	U
64	8	FSW_INIT_STATUS	Flight Software Initialization Status (not for Dwell or FSW Bootup status)	0 -1	OK ERROR	S
72	8	FSW_INIT_CODE	Flight Software Initialization Code (not for Dwell or FSW Bootup status)	N/A	N/A	U
80	8	FSW_PROTECTED	OMPS Protected State Indicator (not for Dwell or FSW Bootup status)	1 0	PROTECTED UNPROTECTED	U
88	4	MEB_FLASH_PWR	SBC Flash Memory Power State (not for Dwell or FSW Bootup status)	0 1	OFF ON	U
92	4	EEPROM_SIDE	EEPROM side used to boot	0 1	Boot Side 1 Boot Side 2	U
96	7	M_MCR_SPARE6	Unused bits of the Miscellaneous Control Register	N/A	N/A	U
103	1	M_MCR_L_SP_CTRL	Limb Signal Processing Spare Control	0 1	OFF ON	U
104	3	M_MCR_SPARE5	Unused bits of the Miscellaneous Control Register	N/A	N/A	U
107	1	M_MCR_N_SP_CTRL	Nadir Signal Processing Spare Control	0 1	OFF ON	U
108	3	M_MCR_SPARE4	Unused bits of the Miscellaneous Control Register	N/A	N/A	U
111	1	M_MCR_TEST_2	Test connector	0 1	OFF ON	U
112	7	M_MCR_SPARE3	Unused bits of the Miscellaneous Control Register	N/A	N/A	U
119	9	M_CAL_LED_STATE	State of the Calibration LEDs	0 257 272 273	ALL_OFF NADIR_TC_ON NADIR_NP_ON LIMB_ON	U
128	7	M_THCR_SPARE7	Unused bits of the TEC & Heater Control & Status Register	N/A	N/A	U
135	1	M_THCR_DAC_BUSY	State of the DACBUSY line	0 1	NOT_BUSY BUSY	U

Check the JPSS MIS Server at https://jpssmis.gsfc.nasa.gov/frontmenu_dsp.cfm to verify that this is the correct version prior to use.

Start Bit	Bit Size	Mnemonic Name	Description	Units OR State Value	Conversion Coefficients (formula or C5,C4,C3,C2,C1,C0) OR State Name	Data Type
136	3	M_THCR_SPARE6	Unused bits of the TEC & Heater Control & Status Register	N/A	N/A	U
139	1	M_TC_TEC_STATE	State of the TC TEC Control	0 1	OFF ON	U
140	3	M_THCR_SPARE5	Unused bits of the TEC & Heater Control & Status Register	N/A	N/A	U
143	1	M_NP_TEC_STATE	State of the NP TEC Control	0 1	OFF ON	U
144	3	M_THCR_SPARE4	Unused bits of the TEC & Heater Control & Status Register	N/A	N/A	U
147	1	M_LP_TEC_STATE	State of the LP TEC Control	0 1	OFF ON	U
148	3	M_THCR_SPARE3	Unused bits of the TEC & Heater Control & Status Register	N/A	N/A	U
151	1	M_TC_HTR_STATE	State of the TC CCD Window Heater Control	0 1	OFF ON	U
152	3	M_THCR_SPARE2	Unused bits of the TEC & Heater Control & Status Register	N/A	N/A	U
155	1	M_NP_HTR_STATE	State of the NP CCD Window Heater Control	0 1	OFF ON	U
156	3	M_THCR_SPARE1	Unused bits of the TEC & Heater Control & Status Register	N/A	N/A	U
159	1	M_LP_HTR_STATE	State of the LP CCD Window Heater Control	0 1	OFF ON	U
160	1	MEB_LP_HTR_PWR	LP Window Heater Power State	0 1	PWR_ENABLED PWR_DISABLED	U
161	1	MEB_NP_HTR_PWR	NP Window Heater Power State	0 1	PWR_ENABLED PWR_DISABLED	U
162	1	MEB_TC_HTR_PWR	TC Window Heater Power State	0 1	PWR_ENABLED PWR_DISABLED	U
163	1	MEB_LP_TEC_PWR	LP TEC Power State	0 1	PWR_ENABLED PWR_DISABLED	U
164	1	MEB_NP_TEC_PWR	NP TEC Power State	0 1	PWR_ENABLED PWR_DISABLED	U
165	1	MEB_TC_TEC_PWR	TC TEC Power State	0 1	PWR_ENABLED PWR_DISABLED	U
166	1	MEB_L_MTR_RELAY	Limb Motor Relay Position	0 1	CLOSED OPEN	U
167	1	MEB_N_MTR_RELAY	Nadir Motor Relay Position	0 1	CLOSED OPEN	U
168	1	MEB_L_PWR	Limb Power Supply State	0 1	PWR_ENABLED PWR_DISABLED	U
169	1	MEB_N_PWR	Nadir Power Supply State	0 1	PWR_ENABLED PWR_DISABLED	U
170	1	MEB_BOOT_SEL_1	Boot Select Bit 1 Relay Position	0 1	CLOSED OPEN	U
171	1	MEB_BOOT_SEL_0	Boot Select Bit 0 Relay Position	0 1	CLOSED OPEN	U
172	1	MEB_L_CLKDRV_RED	Limb Clock Drive Relay Redundant Position	0 1	ALL_REDUNDANT NOT_REDUNDANT	U
173	1	MEB_L_CLKDRV_PRI	Limb Clock Drive Relay Primary Position	0 1	ALL_PRIMARY NOT_PRIMARY	U
174	1	MEB_N_CLKDRV_RED	Nadir Clock Drive Relay Redundant Position	0 1	ALL_REDUNDANT NOT_REDUNDANT	U
175	1	MEB_N_CLKDRV_PRI	Nadir Clock Drive Relay Primary Position	0 1	ALL_PRIMARY NOT_PRIMARY	U

Check the JPSS MIS Server at https://jpssmis.gsfc.nasa.gov/frontmenu_dsp.cfm to verify that this is the correct version prior to use.

Start Bit	Bit Size	Mnemonic Name	Description	Units OR State Value	Conversion Coefficients (formula or C5,C4,C3,C2,C1,C0) OR State Name	Data Type
176	10	M_MCSR_SPARE6	Unused register bits	0 1	OPEN CLOSED	U
186	1	M_L_XMEB_RELAY	Position of Non-Operating MEB Limb Motor Relay	0 1	CLOSED OPEN	U
187	1	M_N_XMEB_RELAY	Position of Non-Operating MEB Nadir Motor Relay	0 1	CLOSED OPEN	U
188	3	M_MCSR_SPARE5	Unused register bits	0 1	OPEN CLOSED	U
191	1	M_MTR_ACTIVE	Motor Control Circuitry Active	0 1	INACTIVE ACTIVE	U
192	3	M_MCSR_SPARE4	Unused register bits	0 1	OPEN CLOSED	U
195	1	M_RELAY_POS	Relay Position	0 1	OPEN CLOSED	U
196	3	M_MCSR_SPARE3	Unused register bits	0 1	OPEN CLOSED	U
199	1	M_MTR_SELECT	Motor Select	0 1	NADIR LIMB	U
200	3	M_MCSR_SPARE2	Unused register bits	0 1	OPEN CLOSED	U
203	1	M_RES_ENABLE	Resolver Circuitry Enable	0 1	DISABLED ENABLED	U
204	3	M_MCSR_SPARE1	Unused register bits	0 1	OPEN CLOSED	U
207	1	M_MTR_RES_PWR	Motor and Resolver Power State	0 1	OFF ON	U
208	1	M_N_RESOLV_BUSY	Nadir Resolver Data Register - Busy	0 1	NOT_BUSY BUSY	U
209	15	M_N_RESOLV_SPARE	Nadir Resolver Data Register - Unused Bits	N/A	N/A	U
224	16	M_N_RESOLV_DATA	Nadir Resolver Data Register - Resolver Data	N/A	N/A	U
240	7	M_NMP_SPARE4	Nadir Motor Parameter Register - Unused Bits	0 1	CW CCW	U
247	1	M_N_DIRECTION	Nadir Motor Direction	0 1	CW CCW	U
248	2	M_NMP_SPARE3	Nadir Motor Parameter Register - Unused Bits	0 1	CW CCW	U
250	2	M_N_SPEED	Nadir Motor Speed	0 1 2 3	STEPS_SEC_300 STEPS_SEC_200 STEPS_SEC_100 STEPS_SEC_10	U
252	2	M_NMP_SPARE2	Nadir Motor Parameter Register - Unused Bits	0 1	CW CCW	U
254	2	M_N_PHASE	Nadir Motor Phase	0 1 2 3	INVALID A_MINUS_B_PLUS A_MINUS_B_MINUS A_PLUS_B_MINUS	U
256	4	M_NMP_SPARE1	Nadir Motor Parameter Register - Unused Bits	0 1	CW CCW	U
260	12	M_N_STEP_COUNT	Nadir Motor Step Count	N/A	N/A	U
272	8	M_N_RETRIES	Nadir Motor Retries	N/A	N/A	U
280	16	M_N_DESTINATION	Nadir Diffuser Move Destination	N/A	N/A	U
296	16	M_TC_TEC_SETPT	Commanded TC TEC Setpoint	N/A	N/A	U
312	16	M_TC_HTR_SETPT	Commanded TC CCD Window Heater Setpoint	N/A	N/A	U
328	16	M_NP_TEC_SETPT	Commanded NP TEC Setpoint	N/A	N/A	U
344	16	M_NP_HTR_SETPT	Commanded NP CCD Window Heater Setpoint	N/A	N/A	U
360	16	M_N_POSITION	Nadir Diffuser Motor Position	N/A	N/A	U
376	8	M_N_POS_ID	Nadir Diffuser Position ID	N/A	N/A	U
384	8	N_TIM_PAT_VER	Nadir Active Timing Pattern Table Version Number -- major version	N/A	N/A	U
392	8	N_TIM_PAT_VER	Nadir Active Timing Pattern Table Version Number -- minor version	N/A	N/A	U
400	16	N_IMG_STATUS	Nadir Image Processing Status	N/A	N/A	U
416	32	N_INT_HOLD_TIME	Nadir TPG Integration Hold Time	milliseconds	-, -, -, -, 0.1, 0	U

Check the JPSS MIS Server at https://jpssmis.gsfc.nasa.gov/frontmenu_dsp.cfm to verify that this is the correct version prior to use.

Start Bit	Bit Size	Mnemonic Name	Description	Units OR State Value	Conversion Coefficients (formula or C5,C4,C3,C2,C1,C0) OR State Name	Data Type
448	8	N_PROFILE_ID	Active Nadir Profile ID	N/A	N/A	U
456	8	N_PROFILE_VER	Nadir Imaging Profile Table Version Number -- major version	N/A	N/A	U
464	8	N_PROFILE_VER	Nadir Imaging Profile Table Version Number -- minor version	N/A	N/A	U
472	16	N_TIM_PAT_TBL	Nadir Timing Pattern Table ID	N/A	N/A	U
488	16	TC_APID	Nadir Total Column Application ID	N/A	N/A	U
504	16	NP_APID	Nadir Profiler Application ID	N/A	N/A	U
520	8	TC_LIN_CORR	Nadir Total Column Linearity Correction Flag	0 1	DISABLED ENABLED	U
528	16	TC_LIN_CORR_TBL	Nadir Total Column Linearity Correction Table ID	N/A	N/A	U
544	16	TC_FIXED_COADDS	Nadir Total Column Fixed Coadd Count	N/A	N/A	U
560	8	TC_REORDER_IMG	Nadir Total Column Reorder Image Flag	0 1	DISABLED ENABLED	U
568	8	TC_GAIN_CORR	Nadir Total Column Gain Correction Flag	0 1	DISABLED ENABLED	U
576	16	TC_GAIN_CORR_TBL	Nadir Total Column Gain Correction Table ID	N/A	N/A	U
592	8	TC_BIN_IMG	Nadir Total Column Bin Image Flag	0 1	DISABLED ENABLED	U
600	16	TC_SAMP_TBL	Nadir Total Column Sample Table ID	N/A	N/A	U
616	8	NP_LIN_CORR	Nadir Profiler Linearity Correction Flag	0 1	DISABLED ENABLED	U
624	16	NP_LIN_CORR_TBL	Nadir Profiler Linearity Correction Table ID	N/A	N/A	U
640	16	NP_FIXED_COADDS	Nadir Profiler Fixed Coadd Count	N/A	N/A	U
656	8	NP_REORDER_IMG	Nadir Profilier Reorder Image Flag	0 1	DISABLED ENABLED	U
664	8	NP_GAIN_CORR	Nadir Profilier Gain Correction Flag	0 1	DISABLED ENABLED	U
672	16	NP_GAIN_CORR_TBL	Nadir Profilier Gain Correction Table ID	N/A	N/A	U
688	8	NP_BIN_IMG	Nadir Profilier Bin Image Flag	0 1	DISABLED ENABLED	U
696	16	NP_SAMP_TBL	Nadir Profilier Sample Table ID	N/A	N/A	U
712	8	TC_GAIN_TBL_VER	Nadir Total Column Gain Table Version -- major version	N/A	N/A	U
720	8	TC_GAIN_TBL_VER	Nadir Total Column Gain Table Version -- minor version	N/A	N/A	U
728	8	NP_GAIN_TBL_VER	Nadir Profiler Gain Table Version -- major version	N/A	N/A	U
736	8	NP_GAIN_TBL_VER	Nadir Profiler Gain Table Version -- minor version	N/A	N/A	U
744	8	TC_LIN_TBL_VER	Nadir Total Column Linearity Table Version -- major version	N/A	N/A	U
752	8	TC_LIN_TBL_VER	Nadir Total Column Linearity Table Version -- minor version	N/A	N/A	U
760	8	NP_LIN_TBL_VER	Nadir Profiler Linearity Table Version -- major version	N/A	N/A	U
768	8	NP_LIN_TBL_VER	Nadir Profiler Linearity Table Version -- minor version	N/A	N/A	U
776	8	TC_SAMP_TBL_VER	Nadir Total Column Sample Table Version -- major version	N/A	N/A	U
784	8	TC_SAMP_TBL_VER	Nadir Total Column Sample Table Version -- minor version	N/A	N/A	U
792	8	NP_SAMP_TBL_VER	Nadir Profiler Sample Table Version -- major version	N/A	N/A	U
800	8	NP_SAMP_TBL_VER	Nadir Profiler Sample Table Version -- minor version	N/A	N/A	U

Start Bit	Bit Size	Mnemonic Name	Description	Units OR State Value	Conversion Coefficients (formula or C5,C4,C3,C2,C1,C0) OR State Name	Data Type
808	16	TC_ROWS	Rows of Nadir Total Column CCD data	N/A	N/A	U
824	16	TC_COLS	Columns of Nadir Total Column CCD data	N/A	N/A	U
840	16	TC_LAST_IMG_DOY	Time stamp of last good TC image (day of year)	N/A	N/A	U
856	32	TC_LAST_IMG_MSEC	Time stamp of last good TC image	milliseconds	N/A	U
888	16	TC_LAST_IMG_USEC	Time stamp of last good TC image	microseconds	N/A	U
904	16	M_I_CAL_LED	Current in the active Calibration LED	milliamps	-, -, -, -, 0.006125, 0	S
920	16	M_T_MTR_DRV_BD	Temperature - Motor Driver Board	Celsius	-, -, -, -, 0.0486, -273.15	S
936	16	N_T_TELESCOPE	Temperature - Nadir Telescope	Celsius	-32768 to 83: -, -, -8.469E-5, 0.02033, -1.99, 128.8 84 to 343: -, -, -1.465E-6, 0.001323, -0.4741, 86.11 344 to 1795: -, -, -1.044E-8, 4.681E-5, -0.08272, 43.02 1796 to 32767: -, -, -9.53E-11, 1.817E-6, -0.01566, 7.7	S
952	16	TC_T_CCD	Temperature - Nadir Total Column CCD	Celsius	-, -, -, -, -0.0238, 58.05	S
968	16	NP_T_CCD	Temperature - Nadir Profiler CCD	Celsius	-, -, -, -, -0.0238, 58.05	S
984	16	M_V_MTR_RES_5V	Voltage - Motor/Resolver Electronics +5V	Volts	-, -, -, -, 0.000949, 0	S
1000	16	M_V_RES_12V	Voltage - Resolver Electronics +12V	Volts	-, -, -, -, 0.00311, 0	S
1016	16	M_V_RES_M12V	Voltage - Resolver Electronics -12V	Volts	-, -, -, -, 0.00311, 0	S
1032	16	N_T_MOTOR	Temperature - Nadir Diffuser Motor	Celsius	-32768 to 83: -, -, -8.469E-5, 0.02033, -1.99, 128.8 84 to 343: -, -, -1.465E-6, 0.001323, -0.4741, 86.11 344 to 1795: -, -, -1.044E-8, 4.681E-5, -0.08272, 43.02 1796 to 32767: -, -, -9.53E-11, 1.817E-6, -0.01566, 7.7	S
1048	16	N_T_HOUSING	Temperature - Nadir Calibration Housing	Celsius	-32768 to 83: -, -, -8.469E-5, 0.02033, -1.99, 128.8 84 to 343: -, -, -1.465E-6, 0.001323, -0.4741, 86.11 344 to 1795: -, -, -1.044E-8, 4.681E-5, -0.08272, 43.02 1796 to 32767: -, -, -9.53E-11, 1.817E-6, -0.01566, 7.7	S
1064	16	N_T_SUN_SIDE	Temperature - Nadir Sun Side	Celsius	-32768 to 83: -, -, -8.469E-5, 0.02033, -1.99, 128.8 84 to 343: -, -, -1.465E-6, 0.001323, -0.4741, 86.11 344 to 1795: -, -, -1.044E-8, 4.681E-5, -0.08272, 43.02 1796 to 32767: -, -, -9.53E-11, 1.817E-6, -0.01566, 7.7	S
1080	16	N_T_DARK_SIDE	Temperature - Nadir Dark Side	Celsius	-32768 to 83: -, -, -8.469E-5, 0.02033, -1.99, 128.8 84 to 343: -, -, -1.465E-6, 0.001323, -0.4741, 86.11 344 to 1795: -, -, -1.044E-8, 4.681E-5, -0.08272, 43.02 1796 to 32767: -, -, -9.53E-11, 1.817E-6, -0.01566, 7.7	S
1096	16	TC_T_COND_BAR	Temperature - TC Conductor Bar	Celsius	-32768 to 83: -, -, -8.469E-5, 0.02033, -1.99, 128.8 84 to 343: -, -, -1.465E-6, 0.001323, -0.4741, 86.11 344 to 1795: -, -, -1.044E-8, 4.681E-5, -0.08272, 43.02 1796 to 32767: -, -, -9.53E-11, 1.817E-6, -0.01566, 7.7	S
1112	16	NP_T_COND_BAR	Temperature - NP Conductor Bar	Celsius	-32768 to 83: -, -, -8.469E-5, 0.02033, -1.99, 128.8 84 to 343: -, -, -1.465E-6, 0.001323, -0.4741, 86.11 344 to 1795: -, -, -1.044E-8, 4.681E-5, -0.08272, 43.02 1796 to 32767: -, -, -9.53E-11, 1.817E-6, -0.01566, 7.7	S
1128	16	TC_P_HTR_SET	Power Setpoint - TC Window Heater	Watts	-, -, -, 5.76E-8, 0, 0	S
1144	16	NP_P_HTR_SET	Power Setpoint - NP Window Heater	Watts	-, -, -, 5.76E-8, 0, 0	S
1160	16	N_T_SIG_BD	Temperature - Nadir Signal Board	Celsius	-, -, -, -, 0.1233, -273.15	S
1176	16	N_T_TIM_BD	Temperature - Nadir Timing Board	Celsius	-, -, -, -, 0.0486, -273.15	S
1192	16	TC_T_HOUSING	Temperature - TC Housing.	Celsius	-32768 to 83: -, -, -8.469E-5, 0.02033, -1.99, 128.8 84 to 343: -, -, -1.465E-6, 0.001323, -0.4741, 86.11 344 to 1795: -, -, -1.044E-8, 4.681E-5, -0.08272, 43.02 1796 to 32767: -, -, -9.53E-11, 1.817E-6, -0.01566, 7.7	S
1208	16	NP_T_WINDOW	Temperature - NP Window	Celsius	-, -, -, -, 0.0483, -273.15	S
1224	16	TC_T_WINDOW	Temperature - TC Window	Celsius	-, -, -, -, 0.0483, -273.15	S
1240	32	N/A	HW Start Tag (if image is not sampled)	N/A	N/A	U
varies	Varies	N/A	CCD Data (# pixels x 32 bits/pixel)	N/A	N/A	U
varies	32	N/A	HW End Tag (if image is not sampled)	N/A	N/A	U
Varies	8	N/A	Pad Byte	N/A	N/A	U

Check the JPSS MIS Server at https://jpssmis.gsfc.nasa.gov/frontmenu_dsp.cfm to verify that this is the correct version prior to use.

4.3.4.1.2 Nadir Profiler

The Nadir Profiler (NP) only uses one half (the A/C half) of the CCD and is aligned the same way as the TC with the spectral dimension in columns and spatial dimension in rows. Each column corresponds to a different spectral wavelength and each row a different spatial location. The number of pixels that are required in the spatial dimension is derived from the 250 km swath width requirement. The number of pixels in the spectral dimension is based on the required spectral range, the spectral scale of the instrument, the uncertainty in the spectral scale, and the alignment of the focal plane to the spectral range. See "OMPS CCD Reference Figures" for explanation of the pixel binning and alignment.

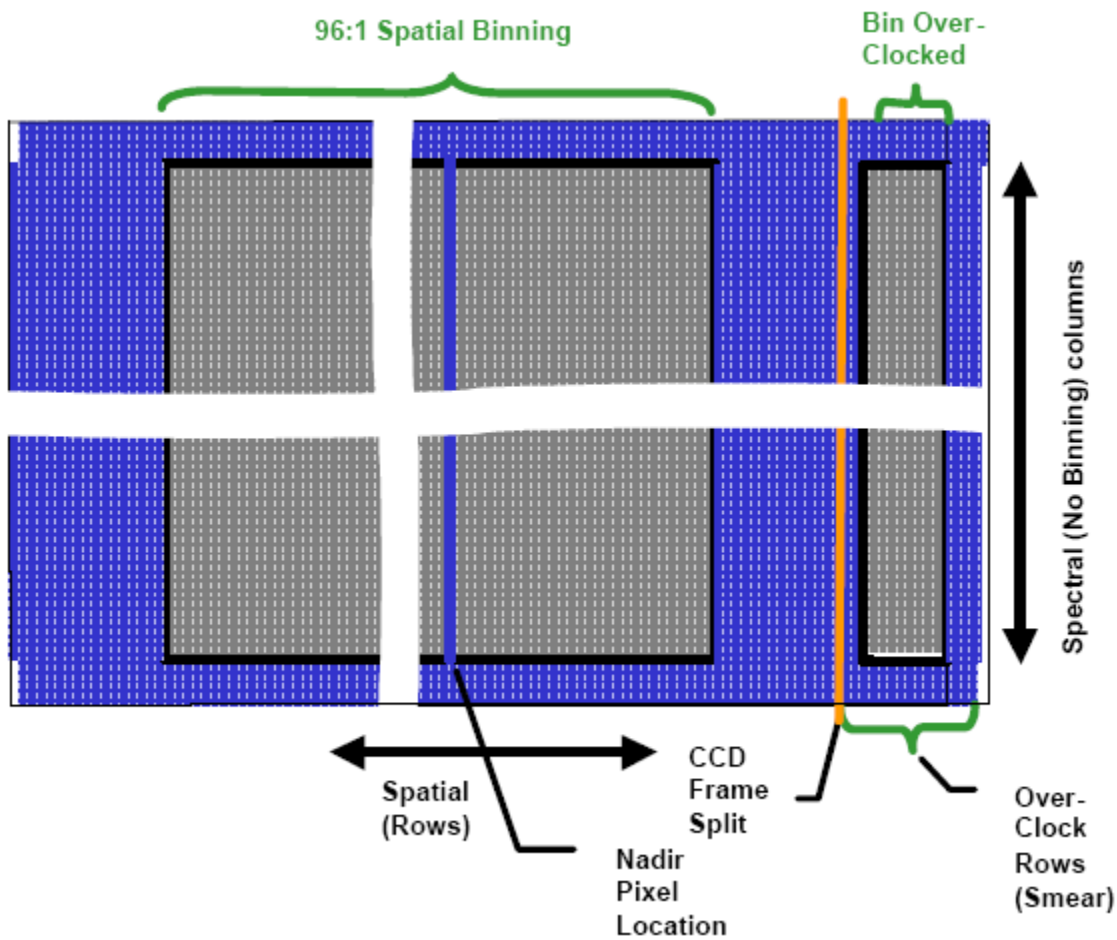

Figure 4.3-8. (For Reference Only) OMPS Nadir Profile On-orbit Windowing and Spatial Binning

The NP image data is taken from the light sensitive portion of the CCD. Binning is performed in the spatial dimension centered about the nadir pixel row. Again, the nadir row is determined based on instrument to spacecraft mounting alignment. There is no binning in the spectral dimension. There is one over-clocked bin generated for the half of the CCD in use. The center rows are binned spatially with no binning of spectral over- clocked rows. See Figure 4.3-8.

The OMPS outputs the Nadir Profiler data (APID 561) in one grouped packet containing 2 CCSDS packets. The first packet is 1024 octets; the second and final packet is 332 octets for a total of 1356 octets. The first packet contains the 10 octet secondary header (time code, number of packets, and packet version), the OMPS header (RDR version, number of grouped packets [Cont Count], and a flag indicating multiple grouped packets [Cont Flag]), 153 octets of engineering data, and the beginning of the CCD data. The CCD data in the user data field consist of 147 x 2 binned pixels, totaling to 1356 octets.

	12	(2 x 6 octets primary header)
+	10	(octets secondary header)
+	4	(octets OMPS header)
+	151	(octets engineering data)
+	1177	(octets science data plus pad byte)
=	1354	total octets.

The packet is generated approximately every 37.44 seconds. The structure of APID 561 is illustrated in Figure 4.3-9 and Figure 4.3-10. The user data fields are listed in Table 4.3-5.

NOTE: The specific packet, octet, and macro-pixel sizes quoted in this paragraph should be considered notional -- as they are ultimately determined by the specific macro-pixel definitions within the version of the uploadable sample table that is used to generate this image data.

Check the JPSS MIS Server at https://jpssmis.gsfc.nasa.gov/frontmenu_dsp.cfm to verify that this is the correct version prior to use.

FIRST PACKET

	PACKET PRIMARY HEADER							SECONDARY HEADER			User Data Field					
	Verson No.	Packet Identification			Packet Sequence		Packet Length	Start of Scan	Packets in RDR = 1	Spare	OMPS Header			Engineering Data	Science	
		Type Indicator	Sec Hdr Flag	APID	Sequence Flags	Sequence Count					RDR Version	Cont Count -1	Cont Flag	Engineering Data Sections	CCD data (147 x 2 pixels) (start)	
Bits	3	1	1	11	2	14	16	64	8	8	16	8	8	1208	6824	TOTAL 8192
Octets	2				2		2	8	1	1	2	1	1	151	853	1024
Value	000	0	1	0x231	01	varies	0x03F9	varies	0x01	0x00	varies	varies	varies	varies	varies	

Telemetry Packet

Secondary Header Present

First Packet

Engineering Data													
Sensor_Info (7)	Mech_SD (59)	Mech_Nadir	Mech_Nadir_SD (73)	Nadir_SD (71)	Nadir_IMG_Profile_SD (50)	Nadir_NP_SD (68)	Curr_LED_SD (26)	Temp_Mech_SD (30)	Temp_Nadir_SD (28)	Volt_Mech_SD (42)	Temp_Nadir (24)	Temp_NP (36)	Temp_TC (35)
64	112	88	88	64	360	96	16	16	48	48	176	16	16
8	14	11	11	8	45	12	2	2	6	6	22	2	2
varies	varies	varies	varies	varies	varies	varies	varies	varies	varies	varies	varies	varies	varies

Figure 4.3-9. OMPS Nadir Profiler First Packet Format

LAST PACKET

	PACKET PRIMARY HEADER							User Data Field			
	Verson No.	Packet Identification			Packet Sequence		Packet Length	Science			
		Type Indicator	Sec Hdr Flag	APID	Sequence Flags	Sequence Count		CCD data (147 x 2 pixels) (end)	Pad Byte	TOTAL	RDR TOTAL
Bits	3	1	1	11	2	14	16	2584	8	2640	10832
Octets	2				2		2	323	1	330	1354
Value	000	0	0	0x231	10	varies	0x0143	varies	fixed		

Telemetry Packet

Last Packet

Figure 4.3-10. OMPS Nadir Profiler Last Packet Format

Check the JPSS MIS Server at https://jpssmis.gsfc.nasa.gov/frontmenu_dsp.cfm to verify that this is the correct version prior to use.

Table 4.3-5. OMPS Nadir Profiler Packet User Data Fields

Start Bit	Bit Size	Mnemonic Name	Description	Units OR State Value	Conversion Coefficients (formula or C5,C4,C3,C2,C1,C0) OR State Name	Data Type
0	16	CCSDS_RDR_VER	Version Number of RDR	N/A	N/A	U
16	8	CCSDS_CONT_COUNT	Number of segmented CCSDS packet sequences - 1	N/A	N/A	U
24	8	CCSDS_CONT_FLAG	Indicates if this CCSDS packet begins an RDR	N/A	N/A	U
32	8	SENSOR_ID	OMPS Sensor Identification (not for Dwell or FSW Bootup status)	N/A	N/A	U
40	8	FSW_VERSION	Flight Software Version Number (not for Dwell or FSW Bootup status) -- major version	N/A	N/A	U
48	8	FSW_VERSION	Flight Software Version Number (not for Dwell or FSW Bootup status) -- minor version	N/A	N/A	U
56	2	MEB_BOOT_IMG_ID	Boot Image Identifier (not for Dwell or FSW Bootup status)	0 1 2	0 = Not Used 1 = As-Launched 2 = Modifiable	U
58	5	MEB_SBC_ID	Single Board Computer Identifier (not for Dwell or FSW Bootup status)	N/A	N/A	U
63	1	MEB_SIDE	Active MEB Side (not for Dwell or FSW Bootup status)	0 1	MEB2 MEB1	U
64	8	FSW_INIT_STATUS	Flight Software Initialization Status (not for Dwell or FSW Bootup status)	0 -1	OK ERROR	S
72	8	FSW_INIT_CODE	Flight Software Initialization Code (not for Dwell or FSW Bootup status)	N/A	N/A	U
80	8	FSW_PROTECTED	OMPS Protected State Indicator (not for Dwell or FSW Bootup status)	1 0	PROTECTED UNPROTECTED	U
88	4	MEB_FLASH_PWR	SBC Flash Memory Power State (not for Dwell or FSW Bootup status)	0 1	OFF ON	U
92	4	EEPROM_SIDE	EEPROM side used to boot	0 1	Boot Side 1 Boot Side 2	U
96	7	M_MCR_SPARE6	Unused bits of the Miscellaneous Control Register	N/A	N/A	U
103	1	M_MCR_L_SP_CTRL	Limb Signal Processing Spare Control	0 1	OFF ON	U
104	3	M_MCR_SPARE5	Unused bits of the Miscellaneous Control Register	N/A	N/A	U
107	1	M_MCR_N_SP_CTRL	Nadir Signal Processing Spare Control	0 1	OFF ON	U
108	3	M_MCR_SPARE4	Unused bits of the Miscellaneous Control Register	N/A	N/A	U
111	1	M_MCR_TEST_2	Test connector	0 1	OFF ON	U
112	7	M_MCR_SPARE3	Unused bits of the Miscellaneous Control Register	N/A	N/A	U
119	9	M_CAL_LED_STATE	State of the Calibration LEDs	0 257 272 273	ALL_OFF NADIR_TC_ON NADIR_NP_ON LIMB_ON	U
128	7	M_THCR_SPARE7	Unused bits of the TEC & Heater Control & Status Register	N/A	N/A	U
135	1	M_THCR_DAC_BUSY	State of the DACBUSY line	0 1	NOT_BUSY BUSY	U

Check the JPSS MIS Server at https://jpssmis.gsfc.nasa.gov/frontmenu_dsp.cfm to verify that this is the correct version prior to use.

Start Bit	Bit Size	Mnemonic Name	Description	Units OR State Value	Conversion Coefficients (formula or C5,C4,C3,C2,C1,C0) OR State Name	Data Type
136	3	M_THCR_SPARE6	Unused bits of the TEC & Heater Control & Status Register	N/A	N/A	U
139	1	M_TC_TEC_STATE	State of the TC TEC Control	0 1	OFF ON	U
140	3	M_THCR_SPARE5	Unused bits of the TEC & Heater Control & Status Register	N/A	N/A	U
143	1	M_NP_TEC_STATE	State of the NP TEC Control	0 1	OFF ON	U
144	3	M_THCR_SPARE4	Unused bits of the TEC & Heater Control & Status Register	N/A	N/A	U
147	1	M_LP_TEC_STATE	State of the LP TEC Control	0 1	OFF ON	U
148	3	M_THCR_SPARE3	Unused bits of the TEC & Heater Control & Status Register	N/A	N/A	U
151	1	M_TC_HTR_STATE	State of the TC CCD Window Heater Control	0 1	OFF ON	U
152	3	M_THCR_SPARE2	Unused bits of the TEC & Heater Control & Status Register	N/A	N/A	U
155	1	M_NP_HTR_STATE	State of the NP CCD Window Heater Control	0 1	OFF ON	U
156	3	M_THCR_SPARE1	Unused bits of the TEC & Heater Control & Status Register	N/A	N/A	U
159	1	M_LP_HTR_STATE	State of the LP CCD Window Heater Control	0 1	OFF ON	U
160	1	MEB_LP_HTR_PWR	LP Window Heater Power State	0 1	PWR_ENABLED PWR_DISABLED	U
161	1	MEB_NP_HTR_PWR	NP Window Heater Power State	0 1	PWR_ENABLED PWR_DISABLED	U
162	1	MEB_TC_HTR_PWR	TC Window Heater Power State	0 1	PWR_ENABLED PWR_DISABLED	U
163	1	MEB_LP_TEC_PWR	LP TEC Power State	0 1	PWR_ENABLED PWR_DISABLED	U
164	1	MEB_NP_TEC_PWR	NP TEC Power State	0 1	PWR_ENABLED PWR_DISABLED	U
165	1	MEB_TC_TEC_PWR	TC TEC Power State	0 1	PWR_ENABLED PWR_DISABLED	U
166	1	MEB_L_MTR_RELAY	Limb Motor Relay Position	0 1	CLOSED OPEN	U
167	1	MEB_N_MTR_RELAY	Nadir Motor Relay Position	0 1	CLOSED OPEN	U
168	1	MEB_L_PWR	Limb Power Supply State	0 1	PWR_ENABLED PWR_DISABLED	U
169	1	MEB_N_PWR	Nadir Power Supply State	0 1	PWR_ENABLED PWR_DISABLED	U
170	1	MEB_BOOT_SEL_1	Boot Select Bit 1 Relay Position	0 1	CLOSED OPEN	U
171	1	MEB_BOOT_SEL_0	Boot Select Bit 0 Relay Position	0 1	CLOSED OPEN	U
172	1	MEB_L_CLKDRV_RED	Limb Clock Drive Relay Redundant Position	0 1	ALL_REDUNDANT NOT_REDUNDANT	U
173	1	MEB_L_CLKDRV_PRI	Limb Clock Drive Relay Primary Position	0 1	ALL_PRIMARY NOT_PRIMARY	U
174	1	MEB_N_CLKDRV_RED	Nadir Clock Drive Relay Redundant Position	0 1	ALL_REDUNDANT NOT_REDUNDANT	U
175	1	MEB_N_CLKDRV_PRI	Nadir Clock Drive Relay Primary Position	0 1	ALL_PRIMARY NOT_PRIMARY	U
176	10	M_MCSR_SPARE6	Unused register bits	0 1	OPEN CLOSED	U
186	1	M_L_XMEB_RELAY	Position of Non-Operating MEB Limb Motor Relay	0 1	CLOSED OPEN	U
187	1	M_N_XMEB_RELAY	Position of Non-Operating MEB Nadir Motor Relay	0 1	CLOSED OPEN	U
188	3	M_MCSR_SPARE5	Unused register bits	0 1	OPEN CLOSED	U

Check the JPSS MIS Server at https://jpssmis.gsfc.nasa.gov/frontmenu_dsp.cfm to verify that this is the correct version prior to use.

Start Bit	Bit Size	Mnemonic Name	Description	Units OR State Value	Conversion Coefficients (formula or C5,C4,C3,C2,C1,C0) OR State Name	Data Type
191	1	M_MTR_ACTIVE	Motor Control Circuitry Active	0 1	INACTIVE ACTIVE	U
192	3	M_MCSR_SPARE4	Unused register bits	0 1	OPEN CLOSED	U
195	1	M_RELAY_POS	Relay Position	0 1	OPEN CLOSED	U
196	3	M_MCSR_SPARE3	Unused register bits	0 1	OPEN CLOSED	U
199	1	M_MTR_SELECT	Motor Select	0 1	NADIR LIMB	U
200	3	M_MCSR_SPARE2	Unused register bits	0 1	OPEN CLOSED	U
203	1	M_RES_ENABLE	Resolver Circuitry Enable	0 1	DISABLED ENABLED	U
204	3	M_MCSR_SPARE1	Unused register bits	0 1	OPEN CLOSED	U
207	1	M_MTR_RES_PWR	Motor and Resolver Power State	0 1	OFF ON	U
208	1	M_N_RESOLV_BUSY	Nadir Resolver Data Register - Busy	0 1	NOT_BUSY BUSY	U
209	15	M_N_RESOLV_SPARE	Nadir Resolver Data Register - Unused Bits	N/A	N/A	U
224	16	M_N_RESOLV_DATA	Nadir Resolver Data Register - Resolver Data	N/A	N/A	U
240	7	M_NMP_SPARE4	Nadir Motor Parameter Register - Unused Bits	0 1	CW CCW	U
247	1	M_N_DIRECTION	Nadir Motor Direction	0 1	CW CCW	U
248	2	M_NMP_SPARE3	Nadir Motor Parameter Register - Unused Bits	0 1	CW CCW	U
250	2	M_N_SPEED	Nadir Motor Speed	0 1 2 3	STEPS_SEC_300 STEPS_SEC_200 STEPS_SEC_100 STEPS_SEC_10	U
252	2	M_NMP_SPARE2	Nadir Motor Parameter Register - Unused Bits	0 1	CW CCW	U
254	2	M_N_PHASE	Nadir Motor Phase	0 1 2 3	INVALID A_MINUS_B_PLUS A_MINUS_B_MINUS A_PLUS_B_MINUS	U
256	4	M_NMP_SPARE1	Nadir Motor Parameter Register - Unused Bits	0 1	CW CCW	U
260	12	M_N_STEP_COUNT	Nadir Motor Step Count	N/A	N/A	U
272	8	M_N_RETRIES	Nadir Motor Retries	N/A	N/A	U
280	16	M_N_DESTINATION	Nadir Diffuser Move Destination	N/A	N/A	U
296	16	M_TC_TEC_SETPT	Commanded TC TEC Setpoint	N/A	N/A	U
312	16	M_TC_HTR_SETPT	Commanded TC CCD Window Heater Setpoint	N/A	N/A	U
328	16	M_NP_TEC_SETPT	Commanded NP TEC Setpoint	N/A	N/A	U
344	16	M_NP_HTR_SETPT	Commanded NP CCD Window Heater Setpoint	N/A	N/A	U
360	16	M_N_POSITION	Nadir Diffuser Motor Position	N/A	N/A	U
376	8	M_N_POS_ID	Nadir Diffuser Position ID	N/A	N/A	U
384	8	N_TIM_PAT_VER	Nadir Active Timing Pattern Table Version Number -- major version	N/A	N/A	U
392	8	N_TIM_PAT_VER	Nadir Active Timing Pattern Table Version Number -- minor version	N/A	N/A	U
400	16	N_IMG_STATUS	Nadir Image Processing Status	N/A	N/A	U
416	32	N_INT_HOLD_TIME	Nadir TPG Integration Hold Time	milliseconds	-, -, -, -, 0.1, 0	U

Start Bit	Bit Size	Mnemonic Name	Description	Units OR State Value	Conversion Coefficients (formula or C5,C4,C3,C2,C1,C0) OR State Name	Data Type
448	8	N_PROFILE_ID	Active Nadir Profile ID	N/A	N/A	U
456	8	N_PROFILE_VER	Nadir Imaging Profile Table Version Number -- major version	N/A	N/A	U
464	8	N_PROFILE_VER	Nadir Imaging Profile Table Version Number -- minor version	N/A	N/A	U
472	16	N_TIM_PAT_TBL	Nadir Timing Pattern Table ID	N/A	N/A	U
488	16	TC_APID	Nadir Total Column Application ID	N/A	N/A	U
504	16	NP_APID	Nadir Profiler Application ID	N/A	N/A	U
520	8	TC_LIN_CORR	Nadir Total Column Linearity Correction Flag	0 1	DISABLED ENABLED	U
528	16	TC_LIN_CORR_TBL	Nadir Total Column Linearity Correction Table ID	N/A	N/A	U
544	16	TC_FIXED_COADDS	Nadir Total Column Fixed Coadd Count	N/A	N/A	U
560	8	TC_REORDER_IMG	Nadir Total Column Reorder Image Flag	0 1	DISABLED ENABLED	U
568	8	TC_GAIN_CORR	Nadir Total Column Gain Correction Flag	0 1	DISABLED ENABLED	U
576	16	TC_GAIN_CORR_TBL	Nadir Total Column Gain Correction Table ID	N/A	N/A	U
592	8	TC_BIN_IMG	Nadir Total Column Bin Image Flag	0 1	DISABLED ENABLED	U
600	16	TC_SAMP_TBL	Nadir Total Column Sample Table ID	N/A	N/A	U
616	8	NP_LIN_CORR	Nadir Profiler Linearity Correction Flag	0 1	DISABLED ENABLED	U
624	16	NP_LIN_CORR_TBL	Nadir Profiler Linearity Correction Table ID	N/A	N/A	U
640	16	NP_FIXED_COADDS	Nadir Profiler Fixed Coadd Count	N/A	N/A	U
656	8	NP_REORDER_IMG	Nadir Profilier Reorder Image Flag	0 1	DISABLED ENABLED	U
664	8	NP_GAIN_CORR	Nadir Profilier Gain Correction Flag	0 1	DISABLED ENABLED	U
672	16	NP_GAIN_CORR_TBL	Nadir Profilier Gain Correction Table ID	N/A	N/A	U
688	8	NP_BIN_IMG	Nadir Profilier Bin Image Flag	0 1	DISABLED ENABLED	U
696	16	NP_SAMP_TBL	Nadir Profilier Sample Table ID	N/A	N/A	U
712	8	TC_GAIN_TBL_VER	Nadir Total Column Gain Table Version -- major version	N/A	N/A	U
720	8	TC_GAIN_TBL_VER	Nadir Total Column Gain Table Version -- minor version	N/A	N/A	U
728	8	NP_GAIN_TBL_VER	Nadir Profiler Gain Table Version -- major version	N/A	N/A	U
736	8	NP_GAIN_TBL_VER	Nadir Profiler Gain Table Version -- minor_version	N/A	N/A	U
744	8	TC_LIN_TBL_VER	Nadir Total Column Linearity Table Version -- major version	N/A	N/A	U
752	8	TC_LIN_TBL_VER	Nadir Total Column Linearity Table Version -- minor version	N/A	N/A	U
760	8	NP_LIN_TBL_VER	Nadir Profiler Linearity Table Version -- major version	N/A	N/A	U
768	8	NP_LIN_TBL_VER	Nadir Profiler Linearity Table Version -- minor_version	N/A	N/A	U
776	8	TC_SAMP_TBL_VER	Nadir Total Column Sample Table Version -- major version	N/A	N/A	U
784	8	TC_SAMP_TBL_VER	Nadir Total Column Sample Table Version -- minor version	N/A	N/A	U
792	8	NP_SAMP_TBL_VER	Nadir Profiler Sample Table Version -- major version	N/A	N/A	U
800	8	NP_SAMP_TBL_VER	Nadir Profiler Sample Table Version -- minor version	N/A	N/A	U

Start Bit	Bit Size	Mnemonic Name	Description	Units OR State Value	Conversion Coefficients (formula or C5,C4,C3,C2,C1,C0) OR State Name	Data Type
808	16	NP_ROWS	Rows of Nadir Total Column CCD data	N/A	N/A	U
824	16	NP_COLS	Columns of Nadir Total Column CCD data	N/A	N/A	U
840	16	NP_LAST_IMG_DOY	Time stamp of last good TC image (day of year)	N/A	N/A	U
856	32	NP_LAST_IMG_MSEC	Time stamp of last good TC image	milliseconds	N/A	U
888	16	NP_LAST_IMG_USEC	Time stamp of last good TC image	microseconds	N/A	U
904	16	M_I_CAL_LED	Current in the active Calibration LED	milliamps	-, -, -, -, 0.006125, 0	S
920	16	M_T_MTR_DRV_BD	Temperature - Motor Driver Board	Celsius	-, -, -, -, 0.0486, -273.15	S
936	16	N_T_TELESCOPE	Temperature - Nadir Telescope	Celsius	-32768 to 83: -, -, -8.469E-5, 0.02033, -1.99, 128.8 84 to 343: -, -, -1.465E-6, 0.001323, -0.4741, 86.11 344 to 1795: -, -, -1.044E-8, 4.681E-5, -0.08272, 43.02 1796 to 32767: -, -, -9.53E-11, 1.817E-6, -0.01566, 7.7	S
952	16	TC_T_CCD	Temperature - Nadir Total Column CCD	Celsius	-, -, -, -, -0.0238, 58.05	S
968	16	NP_T_CCD	Temperature - Nadir Profiler CCD	Celsius	-, -, -, -, -0.0238, 58.05	S
984	16	M_V_MTR_RES_5V	Voltage - Motor/Resolver Electronics +5V	Volts	-, -, -, -, 0.000949, 0	S
1000	16	M_V_RES_12V	Voltage - Resolver Electronics +12V	Volts	-, -, -, -, 0.00311, 0	S
1016	16	M_V_RES_M12V	Voltage - Resolver Electronics -12V	Volts	-, -, -, -, 0.00311, 0	S
1032	16	N_T_MOTOR	Temperature - Nadir Diffuser Motor	Celsius	-32768 to 83: -, -, -8.469E-5, 0.02033, -1.99, 128.8 84 to 343: -, -, -1.465E-6, 0.001323, -0.4741, 86.11 344 to 1795: -, -, -1.044E-8, 4.681E-5, -0.08272, 43.02 1796 to 32767: -, -, -9.53E-11, 1.817E-6, -0.01566, 7.7	S
1048	16	N_T_HOUSING	Temperature - Nadir Calibration Housing	Celsius	-32768 to 83: -, -, -8.469E-5, 0.02033, -1.99, 128.8 84 to 343: -, -, -1.465E-6, 0.001323, -0.4741, 86.11 344 to 1795: -, -, -1.044E-8, 4.681E-5, -0.08272, 43.02 1796 to 32767: -, -, -9.53E-11, 1.817E-6, -0.01566, 7.7	S
1064	16	N_T_SUN_SIDE	Temperature - Nadir Sun Side	Celsius	-32768 to 83: -, -, -8.469E-5, 0.02033, -1.99, 128.8 84 to 343: -, -, -1.465E-6, 0.001323, -0.4741, 86.11 344 to 1795: -, -, -1.044E-8, 4.681E-5, -0.08272, 43.02 1796 to 32767: -, -, -9.53E-11, 1.817E-6, -0.01566, 7.7	S
1080	16	N_T_DARK_SIDE	Temperature - Nadir Dark Side	Celsius	-32768 to 83: -, -, -8.469E-5, 0.02033, -1.99, 128.8 84 to 343: -, -, -1.465E-6, 0.001323, -0.4741, 86.11 344 to 1795: -, -, -1.044E-8, 4.681E-5, -0.08272, 43.02 1796 to 32767: -, -, -9.53E-11, 1.817E-6, -0.01566, 7.7	S
1096	16	TC_T_COND_BAR	Temperature - TC Conductor Bar	Celsius	-32768 to 83: -, -, -8.469E-5, 0.02033, -1.99, 128.8 84 to 343: -, -, -1.465E-6, 0.001323, -0.4741, 86.11 344 to 1795: -, -, -1.044E-8, 4.681E-5, -0.08272, 43.02 1796 to 32767: -, -, -9.53E-11, 1.817E-6, -0.01566, 7.7	S
1112	16	NP_T_COND_BAR	Temperature - NP Conductor Bar	Celsius	-32768 to 83: -, -, -8.469E-5, 0.02033, -1.99, 128.8 84 to 343: -, -, -1.465E-6, 0.001323, -0.4741, 86.11 344 to 1795: -, -, -1.044E-8, 4.681E-5, -0.08272, 43.02 1796 to 32767: -, -, -9.53E-11, 1.817E-6, -0.01566, 7.7	S
1128	16	TC_P_HTR_SET	Power Setpoint - TC Window Heater	Watts	-, -, -, 5.76E-8, 0, 0	S
1144	16	NP_P_HTR_SET	Power Setpoint - NP Window Heater	Watts	-, -, -, 5.76E-8, 0, 0	S
1160	16	N_T_SIG_BD	Temperature - Nadir Signal Board	Celsius	-, -, -, -, 0.1233, -273.15	S
1176	16	N_T_TIM_BD	Temperature - Nadir Timing Board	Celsius	-, -, -, -, 0.0486, -273.15	S
1192	16	TC_T_HOUSING	Temperature - TC Housing.	Celsius	-32768 to 83: -, -, -8.469E-5, 0.02033, -1.99, 128.8 84 to 343: -, -, -1.465E-6, 0.001323, -0.4741, 86.11 344 to 1795: -, -, -1.044E-8, 4.681E-5, -0.08272, 43.02 1796 to 32767: -, -, -9.53E-11, 1.817E-6, -0.01566, 7.7	S
1208	16	NP_T_WINDOW	Temperature - NP Window	Celsius	-, -, -, -, 0.0483, -273.15	S
1224	16	TC_T_WINDOW	Temperature - TC Window	Celsius	-, -, -, -, 0.0483, -273.15	S
1240	32	N/A	HW Start Tag (if image is not sampled)	N/A	N/A	U
varies	varies	N/A	CCD Data (# pixels x 32 bits/pixel)	N/A	N/A	U
varies	32	N/A	HW End Tag (if image is not sampled)	N/A	N/A	U
varies	8	N/A	Pad Byte	N/A	N/A	U

4.3.4.1.3 Limb Profiler Long Exposure

The Limb Profiler uses both halves of the CCD. The Limb alignment is the opposite of the Nadir instrument with the spectral dimension in rows and the spatial dimension in columns. Each row corresponds roughly to a different spectral wavelength and each column to a different spatial location. The Limb uses virtually the entire focal plane to produce science data. The Limb instrument produces two images from the same focal plane, a long integration image and a short integration image.

The OMPS outputs the Limb Profiler Long (L2) Exposure data (APID 562) in one grouped packet containing 168 CCSDS packets. The first and middle packets are 1024 octets; the final packet is 994 octets. The packet is generated every 18.72 seconds. The structure of APID 562 is illustrated in Figure 4.3-11, Figure 4.3-13 OMPS Limb Profiler Long Exposure Last Packet Format and Figure 4.3-12. The user data fields are listed in Table 4.3-6.

NOTE: The specific packet, octet, and macro-pixel sizes quoted in this paragraph should be considered notional -- as they are ultimately determined by the specific macro-pixel definitions within the version of the uploadable sample table that is used to generate this image data.

FIRST PACKET

	PACKET PRIMARY HEADER							SECONDARY HEADER			User Data Field					
	Verson No.	Packet Identification			Packet Sequence		Packet Length	Start of Scan	Packets in RDR - 1	Spare	OPMS Header			Engineering Data	Science	
		Type Indicator	Sec Hdr Flag	APID	Sequence Flags	Sequence Count					RDR Version	Cont Count -1	Cont Flag	Engineering Data Sections	CCD data (start)	TOTAL
Bits	3	1	1	11	2	14	16	64	8	8	16	8	8	1032	7000	8192
Octets	2				2		2	8	1	1	2	1	1	129	875	1024
Value	000	0	1	0x232	01	varies	0x03F9	varies	0xA5	varies	varies	varies	varies	varies	varies	

Telemetry Packet

Secondary Header

Engineering Data											
Sensor_Info (7)	Mech_SD (59)	Mech_Limb (63)	Mech_Limb_SD (72)	Limb_SD (65)	Limb_IMG_Profile_SD (51)	Limb_2nd_SD (67)	Curr_LED_SD (26)	Temp_Mech_SD (30)	Temp_Limb_SD (29)	Volt_Mech_SD (42)	Temp_Limb (25)
64	112	88	56	96	264	64	16	16	64	48	144
8	14	11	7	12	33	8	2	2	8	6	18
varies	varies	varies	varies	varies	varies	varies	varies	varies	varies	varies	varies

Figure 4.3-11. OMPS Limb Profiler Long Exposure First Packet Format

MIDDLE PACKET Qty. 166

	PACKET PRIMARY HEADER							User Data Field		
	Verson No.	Packet Identification			Packet Sequence		Packet Length	Science		
		Type Indicator	Sec Hdr Flag	APID	Sequence Flags	Sequence Count		CCD data (middle)	TOTAL	TOTAL Middle Packets
Bits	3	1	1	11	2	14	16	8144	8192	1359872
Octets	2				2		2	1018	1024	169984
Value	000	0	0	0x232	00	varies	0x03F9	varies		

Telemetry Packet

Middle Packet

Figure 4.3-12. OMPS Limb Profiler Long Exposure Middle Packet Format

LAST PACKET

	PACKET PRIMARY HEADER							User Data Field			
	Verson No.	Packet Identification			Packet Sequence		Packet Length	Science			
		Type Indicator	Sec Hdr Flag	APID	Sequence Flags	Sequence Count		CCD data (end)	Pad Byte	TOTAL	RDR TOTAL
Bits	3	1	1	11	2	14	16	7656	8	7712	1375776
Octets	2				2		2	985	1	992	172000
Value	000	0	0	0x232	10	varies	0x03D9	varies	fixed		

Telemetry Packet

Last Packet

Figure 4.3-13. OMPS Limb Profiler Long Exposure Last Packet Format

Check the JPSS MIS Server at https://jpssmis.gsfc.nasa.gov/frontmenu_dsp.cfm to verify that this is the correct version prior to use.

Table 4.3-6. OMPS Limb Profiler Long Exposure Packet User Data Fields

Start Bit	Bit Size	Mnemonic Name	Description	Units OR State Value	Conversion Coefficients (formula or C5,C4,C3,C2,C1,C0) OR State Name	Data Type
0	16	CCSDS_RDR_VER	Version Number of RDR	N/A	N/A	U
16	8	CCSDS_CONT_COUNT	Number of segmented CCSDS packet sequences - 1	N/A	N/A	U
24	8	CCSDS_CONT_FLAG	Indicates if this CCSDS packet begins an RDR	N/A	N/A	U
32	8	SENSOR_ID	OMPS Sensor Identification (not for Dwell or FSW Bootup status)	N/A	N/A	U
40	8	FSW_VERSION	Flight Software Version Number (not for Dwell or FSW Bootup status) -- major version	N/A	N/A	U
48	8	FSW_VERSION	Flight Software Version Number (not for Dwell or FSW Bootup status) -- minor version	N/A	N/A	U
56	2	MEB_BOOT_IMG_ID	Boot Image Identifier (not for Dwell or FSW Bootup status)	0 1 2	Not Used As-Launched Modifiable	U
58	5	MEB_SBC_ID	Single Board Computer Identifier (not for Dwell or FSW Bootup status)	N/A	N/A	U
63	1	MEB_SIDE	Active MEB Side (not for Dwell or FSW Bootup status)	0 1	MEB2 MEB1	U
64	8	FSW_INIT_STATUS	Flight Software Initialization Status (not for Dwell or FSW Bootup status)	0 -1	OK ERROR	S
72	8	FSW_INIT_CODE	Flight Software Initialization Code (not for Dwell or FSW Bootup status)	N/A	N/A	U
80	8	FSW_PROTECTED	OMPS Protected State Indicator (not for Dwell or FSW Bootup status)	1 0	PROTECTED UNPROTECTED	U
88	4	MEB_FLASH_PWR	SBC Flash Memory Power State (not for Dwell or FSW Bootup status)	0 1	OFF ON	U
92	4	EEPROM_SIDE	EEPROM side used to boot	0 1	Boot Side 1 Boot Side 2	U
96	7	M_MCR_SPARE6	Unused bits of the Miscellaneous Control Register	N/A	N/A	U
103	1	M_MCR_L_SP_CTRL	Limb Signal Processing Spare Control	0 1	OFF ON	U
104	3	M_MCR_SPARE5	Unused bits of the Miscellaneous Control Register	N/A	N/A	U
107	1	M_MCR_N_SP_CTRL	Nadir Signal Processing Spare Control	0 1	OFF ON	U
108	3	M_MCR_SPARE4	Unused bits of the Miscellaneous Control Register	N/A	N/A	U
111	1	M_MCR_TEST_2	Test connector	0 1	OFF ON	U
112	7	M_MCR_SPARE3	Unused bits of the Miscellaneous Control Register	N/A	N/A	U
119	9	M_CAL_LED_STATE	State of the Calibration LEDs	0 257 272 273	ALL_OFF NADIR_TC_ON NADIR_NP_ON LIMB_ON	U
128	7	M_THCR_SPARE7	Unused bits of the TEC & Heater Control & Status Register	N/A	N/A	U
135	1	M_THCR_DAC_BUSY	State of the DACBUSY line	0 1	NOT_BUSY BUSY	U
136	3	M_THCR_SPARE6	Unused bits of the TEC & Heater Control & Status Register	N/A	N/A	U
139	1	M_TC_TEC_STATE	State of the TC TEC Control	0 1	OFF ON	U
140	3	M_THCR_SPARE5	Unused bits of the TEC & Heater Control & Status Register	N/A	N/A	U
143	1	M_NP_TEC_STATE	State of the NP TEC Control	0 1	OFF ON	U
144	3	M_THCR_SPARE4	Unused bits of the TEC & Heater Control & Status Register	N/A	N/A	U
147	1	M_LP_TEC_STATE	State of the LP TEC Control	0 1	OFF ON	U
148	3	M_THCR_SPARE3	Unused bits of the TEC & Heater Control & Status Register	N/A	N/A	U
151	1	M_TC_HTR_STATE	State of the TC CCD Window Heater Control	0 1	OFF ON	U
152	3	M_THCR_SPARE2	Unused bits of the TEC & Heater Control & Status Register	N/A	N/A	U

Start Bit	Bit Size	Mnemonic Name	Description	Units OR State Value	Conversion Coefficients (formula or C5,C4,C3,C2,C1,C0) OR State Name	Data Type
155	1	M_NP_HTR_STATE	State of the NP CCD Window Heater Control	0 1	OFF ON	U
156	3	M_THCR_SPARE1	Unused bits of the TEC & Heater Control & Status Register	N/A	N/A	U
159	1	M_LP_HTR_STATE	State of the LP CCD Window Heater Control	0 1	OFF ON	U
160	1	MEB_LP_HTR_PWR	LP Window Heater Power State	0 1	PWR_ENABLED PWR_DISABLED	U
161	1	MEB_NP_HTR_PWR	NP Window Heater Power State	0 1	PWR_ENABLED PWR_DISABLED	U
162	1	MEB_TC_HTR_PWR	TC Window Heater Power State	0 1	PWR_ENABLED PWR_DISABLED	U
163	1	MEB_LP_TEC_PWR	LP TEC Power State	0 1	PWR_ENABLED PWR_DISABLED	U
164	1	MEB_NP_TEC_PWR	NP TEC Power State	0 1	PWR_ENABLED PWR_DISABLED	U
165	1	MEB_TC_TEC_PWR	TC TEC Power State	0 1	PWR_ENABLED PWR_DISABLED	U
166	1	MEB_L_MTR_RELAY	Limb Motor Relay Position	0 1	CLOSED OPEN	U
167	1	MEB_N_MTR_RELAY	Nadir Motor Relay Position	0 1	CLOSED OPEN	U
168	1	MEB_L_PWR	Limb Power Supply State	0 1	PWR_ENABLED PWR_DISABLED	U
169	1	MEB_N_PWR	Nadir Power Supply State	0 1	PWR_ENABLED PWR_DISABLED	U
170	1	MEB_BOOT_SEL_1	Boot Select Bit 1 Relay Position	0 1	CLOSED OPEN	U
171	1	MEB_BOOT_SEL_0	Boot Select Bit 0 Relay Position	0 1	CLOSED OPEN	U
172	1	MEB_L_CLKDRV_RED	Limb Clock Drive Relay Redundant Position	0 1	ALL_REDUNDANT NOT_REDUNDANT	U
173	1	MEB_L_CLKDRV_PRI	Limb Clock Drive Relay Primary Position	0 1	ALL_PRIMARY NOT_PRIMARY	U
174	1	MEB_N_CLKDRV_RED	Nadir Clock Drive Relay Redundant Position	0 1	ALL_REDUNDANT NOT_REDUNDANT	U
175	1	MEB_N_CLKDRV_PRI	Nadir Clock Drive Relay Primary Position	0 1	ALL_PRIMARY NOT_PRIMARY	U
176	10	M_MCSR_SPARE6	Unused register bits	0 1	OPEN CLOSED	U
186	1	M_L_XMEB_RELAY	Position of Non-Operating MEB Limb Motor Relay	0 1	CLOSED OPEN	U
187	1	M_N_XMEB_RELAY	Position of Non-Operating MEB Nadir Motor Relay	0 1	CLOSED OPEN	U
188	3	M_MCSR_SPARE5	Unused register bits	0 1	OPEN CLOSED	U
191	1	M_MTR_ACTIVE	Motor Control Circuitry Active	0 1	INACTIVE ACTIVE	U
192	3	M_MCSR_SPARE4	Unused register bits	0 1	OPEN CLOSED	U
195	1	M_RELAY_POS	Relay Position	0 1	OPEN CLOSED	U
196	3	M_MCSR_SPARE3	Unused register bits	0 1	OPEN CLOSED	U
199	1	M_MTR_SELECT	Motor Select	0 1	NADIR LIMB	U

Start Bit	Bit Size	Mnemonic Name	Description	Units OR State Value	Conversion Coefficients (formula or C5,C4,C3,C2,C1,C0) OR State Name	Data Type
200	3	M_MCSR_SPARE2	Unused register bits	0 1	OPEN CLOSED	U
203	1	M_RES_ENABLE	Resolver Circuitry Enable	0 1	DISABLED ENABLED	U
204	3	M_MCSR_SPARE1	Unused register bits	0 1	OPEN CLOSED	U
207	1	M_MTR_RES_PWR	Motor and Resolver Power State	0 1	OFF ON	U
208	1	M_L_RESOLV_BUSY	Limb Resolver Data Register - Busy	0 1	NOT_BUSY BUSY	U
209	15	M_L_RESOLV_SPARE	Limb Resolver Data Register - Unused Bits	N/A	N/A	U
224	16	M_L_RESOLV_DATA	Limb Resolver Data Register - Resolver Data	N/A	N/A	U
240	7	M_LMP_SPARE4	Limb Motor Parameter Register - Unused Bits	0 1	CW CCW	U
247	1	M_L_DIRECTION	Limb Motor Direction	0 1	CW CCW	U
248	2	M_LMP_SPARE3	Limb Motor Parameter Register - Unused Bits	0 1	CW CCW	U
250	2	M_L_SPEED	Limb Motor Speed	0 1 2 3	STEPS_SEC_300 STEPS_SEC_200 STEPS_SEC_100 STEPS_SEC_10	U
252	2	M_LMP_SPARE2	Limb Motor Parameter Register - Unused Bits	0 1	CW CCW	U
254	2	M_L_PHASE	Limb Motor Phase	0 1 2 3	INVALID A_MINUS_B_PLUS A_MINUS_B_MINUS A_PLUS_B_MINUS	U
256	4	M_LMP_SPARE1	Limb Motor Parameter Register - Unused Bits	0 1	CW CCW	U
260	12	M_L_STEP_COUNT	Limb Motor Step Count	N/A	N/A	U
272	8	M_L_RETRIES	Limb Motor Retries	N/A	N/A	U
280	16	M_L_DESTINATION	Limb Diffuser Move Destination	N/A	N/A	U
296	16	M_LP_TEC_SETPT	Commanded LP TEC Setpoint	N/A	N/A	U
312	16	M_LP_HTR_SETPT	Commanded LP CCD Window Heater Setpoint	N/A	N/A	U
328	16	M_L_POSITION	Limb Diffuser Motor Position	N/A	N/A	U
344	8	M_L_POS_ID	Limb Diffuser Position ID	N/A	N/A	U
352	8	L_TIM_PAT_VER	Limb Active Timing Pattern Table Version Number -- major version	N/A	N/A	U
360	8	L_TIM_PAT_VER	Limb Active Timing Pattern Table Version Number -- minor version	N/A	N/A	U
368	16	L_ROWS	Rows of Limb Profiler CCD data	N/A	N/A	U
384	16	L_COLS	Columns of Limb Profiler CCD data	N/A	N/A	U
400	16	L_IMG_STATUS	Limb Image Processing Status Word	N/A	N/A	U
416	32	L_INT_HOLD_TIME	Limb TPG Integration Hold Time	milliseconds	-, -, -, -, 0.1, 0	U

Start Bit	Bit Size	Mnemonic Name	Description	Units OR State Value	Conversion Coefficients (formula or C5,C4,C3,C2,C1,C0) OR State Name	Data Type
448	8	L_PROFILE_ID	Active Limb Profile ID	N/A	N/A	U
456	8	L_PROFILE_VER	Limb Imaging Profile Table Version Number -- major version	N/A	N/A	U
464	8	L_PROFILE_VER	Limb Imaging Profile Table Version Number -- minor version	N/A	N/A	U
472	16	L_TIM_PAT_TBL	Limb Timing Pattern Table ID	N/A	N/A	U
488	16	L1_APID	Limb Profiler Image #1 Application ID	N/A	N/A	U
504	16	L2_APID	Limb Profiler Image #2 Application ID	N/A	N/A	U
520	8	L_LIN_CORR	Limb Linearity Correction Flag	0 1	DISABLED ENABLED	U
528	16	L_LIN_CORR_TBL	Limb Linearity Correction Table ID	N/A	N/A	U
544	16	L_FIXED_COADDS	Limb Fixed Coadd Count	N/A	N/A	U
560	8	L_REORDER_IMG	Limb Reorder Image Flag	0 1	DISABLED ENABLED	U
568	8	L_GAIN_CORR	Limb Gain Correction Flag	0 1	DISABLED ENABLED	U
576	16	L_GAIN_CORR_TBL	Limb Gain Correction Table ID	N/A	N/A	U
592	8	L1_BIN_IMG	Limb Profiler Image #1 Bin Image Flag	0 1	DISABLED ENABLED	U
600	16	L1_SAMP_TBL	Limb Profiler Image #1 Sample Table ID	N/A	N/A	U
616	8	L2_BIN_IMG	Limb Profiler Image #2 Bin Image Flag	0 1	DISABLED ENABLED	U
624	16	L2_SAMP_TBL	Limb Profiler Image #2 Sample Table ID	N/A	N/A	U
640	8	L_2ND_IMAGE	Limb Profiler Second Image Flag	0 1	FALSE TRUE	U
648	8	L_GAIN_TBL_VER	Limb Gain Table Version Number	N/A	N/A	U
656	8	L_GAIN_TBL_VER	Limb Gain Table Version Number	N/A	N/A	U
664	8	L_LIN_TBL_VER	Limb Linearity Correction Table Version Number -- major version	N/A	N/A	U
672	8	L_LIN_TBL_VER	Limb Linearity Correction Table Version Number -- minor version	N/A	N/A	U
680	8	L1_SAMP_TBL_VER	Limb Image #1 Sample Table Version Number -- major version	N/A	N/A	U
688	8	L1_SAMP_TBL_VER	Limb Image #1 Sample Table Version Number -- minor version	N/A	N/A	U
696	8	L2_SAMP_TBL_VER	Limb Image #2 Sample Table Version Number -- major version	N/A	N/A	U
704	8	L2_SAMP_TBL_VER	Limb Image #2 Sample Table Version Number -- minor version	N/A	N/A	U

Start Bit	Bit Size	Mnemonic Name	Description	Units OR State Value	Conversion Coefficients (formula or C5,C4,C3,C2,C1,C0) OR State Name	Data Type
712	16	L2_LAST_IMG_DOY	Time stamp of last good Limb Image #2 (day of year)	N/A	N/A	U
728	32	L2_LAST_IMG_MSEC	Time stamp of last good Limb Image #2	milliseconds	N/A	U
760	16	L2_LAST_IMG_USEC	Time stamp of last good Limb Image #2	microseconds	N/A	U
776	16	M_I_CAL_LED	Current in the active Calibration LED	milliamps	-, -, -, -, 0.006125, 0	S
792	16	M_T_MTR_DRV_BD	Temperature - Motor Driver Board	Celsius	-, -, -, -, 0.0486, -273.15	S
808	16	L_T_TELESCOPE	Temperature - Limb Telescope	Celsius	-32768 to 83: -, -, -8.469E-5, 0.02033, -1.99, 128.8 84 to 343: -, -, -1.465E-6, 0.001323, -0.4741, 86.11 344 to 1795: -, -, -1.044E-8, 4.681E-5, -0.08272, 43.02 1796 to 32767: -, -, -9.53E-11, 1.817E-6, -0.01566, 7.7	S
824	16	L_T_PRISM_1	Temperature - Limb Prism #1	Celsius	-32768 to 83: -, -, -8.469E-5, 0.02033, -1.99, 128.8 84 to 343: -, -, -1.465E-6, 0.001323, -0.4741, 86.11 344 to 1795: -, -, -1.044E-8, 4.681E-5, -0.08272, 43.02 1796 to 32767: -, -, -9.53E-11, 1.817E-6, -0.01566, 7.7	S
840	16	L_T_PRISM_2	Temperature - Limb Prism #2	Celsius	-32768 to 83: -, -, -8.469E-5, 0.02033, -1.99, 128.8 84 to 343: -, -, -1.465E-6, 0.001323, -0.4741, 86.11 344 to 1795: -, -, -1.044E-8, 4.681E-5, -0.08272, 43.02 1796 to 32767: -, -, -9.53E-11, 1.817E-6, -0.01566, 7.7	S
856	16	L_T_CCD	Temperature - Limb CCD	Celsius	-, -, -, -, -0.0238, 58.05	S
872	16	M_V_MTR_RES_5V	Voltage - Motor/Resolver Electronics +5V	Volts	-, -, -, -, 0.000949, 0	S
888	16	M_V_RES_12V	Voltage - Resolver Electronics +12V	Volts	-, -, -, -, 0.00311, 0	S
904	16	M_V_RES_M12V	Voltage - Resolver Electronics -12V	Volts	-, -, -, -, 0.00311, 0	S
920	16	L_T_MOTOR	Temperature - Limb Diffuser Motor	Celsius	-32768 to 83: -, -, -8.469E-5, 0.02033, -1.99, 128.8 84 to 343: -, -, -1.465E-6, 0.001323, -0.4741, 86.11 344 to 1795: -, -, -1.044E-8, 4.681E-5, -0.08272, 43.02 1796 to 32767: -, -, -9.53E-11, 1.817E-6, -0.01566, 7.7	S
936	16	L_T_HOUSING	Temperature - Limb Housing	Celsius	-32768 to 83: -, -, -8.469E-5, 0.02033, -1.99, 128.8 84 to 343: -, -, -1.465E-6, 0.001323, -0.4741, 86.11 344 to 1795: -, -, -1.044E-8, 4.681E-5, -0.08272, 43.02 1796 to 32767: -, -, -9.53E-11, 1.817E-6, -0.01566, 7.7	S
952	16	L_T_SUN_SIDE	Temperature - Limb Sun Side	Celsius	-32768 to 83: -, -, -8.469E-5, 0.02033, -1.99, 128.8 84 to 343: -, -, -1.465E-6, 0.001323, -0.4741, 86.11 344 to 1795: -, -, -1.044E-8, 4.681E-5, -0.08272, 43.02 1796 to 32767: -, -, -9.53E-11, 1.817E-6, -0.01566, 7.7	S
968	16	L_T_DARK_SIDE	Temperature - Limb Dark Side	Celsius	-32768 to 83: -, -, -8.469E-5, 0.02033, -1.99, 128.8 84 to 343: -, -, -1.465E-6, 0.001323, -0.4741, 86.11 344 to 1795: -, -, -1.044E-8, 4.681E-5, -0.08272, 43.02 1796 to 32767: -, -, -9.53E-11, 1.817E-6, -0.01566, 7.7	S
984	16	L_T_COND_BAR	Temperature - Limb Conductor Bar	Celsius	-32768 to 83: -, -, -8.469E-5, 0.02033, -1.99, 128.8 84 to 343: -, -, -1.465E-6, 0.001323, -0.4741, 86.11 344 to 1795: -, -, -1.044E-8, 4.681E-5, -0.08272, 43.02 1796 to 32767: -, -, -9.53E-11, 1.817E-6, -0.01566, 7.7	S
1000	16	L_T_WINDOW	Temperature - Limb Window	Celsius	-, -, -, -, 0.0483, -273.15	S
1016	16	L_P_HTR_SET	Power Setpoint - Limb CCD Window Heater	Watts	-, -, -, 5.76E-8, 0 ,0	S
1032	16	L_T_SIG_BD	Temperature - Nadir Signal Board	Celsius	-, -, -, -, 0.0486, -273.15	S
1048	16	L_T_TIM_BD	Temperature - Nadir Timing Board	Celsius	-, -, -, -, 0.0486, -273.15	S
1064	32	N/A	HW Start Tag (if image is not sampled)	N/A	N/A	U
varies	varies	N/A	CCD Data (# pixels x 32 bits/pixel)	N/A	N/A	U
varies	32	N/A	HW End Tag (if image is not sampled)	N/A	N/A	U
varies	8	N/A	Pad Byte	N/A	N/A	U

4.3.4.1.4 Limb Profiler Short Exposure

The OMPS outputs the Limb Profiler Short (L1) Exposure data (APID 563) in one grouped packet containing 106 CCSDS packets. The first and middle packets are 1024 octets and the final packet is 110 octets. The packets are generated every 18.72 seconds. The structure of APID 563 is illustrated in Figure 4.3-14, Figure 4.3-15 and Figure 4.3-16. The user data fields are listed in Table 4.3-7.

NOTE: The specific packet, octet, and macro-pixel sizes quoted in this paragraph should be considered notional -- as they are ultimately determined by the specific macro-pixel definitions within the version of the uploadable sample table that is used to generate this image data.

FIRST PACKET

	PACKET PRIMARY HEADER							SECONDARY HEADER			User Data Field					
	Verson No.	Packet Identification			Packet Sequence		Packet Length	Start of Scan	Packets in RDR - 1	Spare	OMPS Header			Engineering Data	Science	
		Type Indicator	Sec Hdr Flag	APID	Sequence Flags	Sequence Count					RDR Version	Cont Count -1	Cont Flag	Engineering Data Sections	CCD data (start)	
Bits	3	1	1	11	2	14	16	64	8	8	16	8	8	1032	7000	TOTAL 8192
Octets	2				2		2	8	1	1	2	1	1	129	875	1024
Value	000	0	1	0x233	01	varies	0x03F9	varies	0x6C	varies	varies	varies	varies	varies	varies	

Telemetry Packet

Secondary Header Present

Engineering Data											
Sensor_Info (7)	Mech_SD (59)	Mech_Limb (63)	Mech_Limb_SD (72)	Limb_SD (65)	Limb_IMG_Profile_SD (51)	Limb_1st_SD (49)	Curr_LED_SD (26)	Temp_Mech_SD (30)	Temp_Limb_SD (29)	Volt_Mech_SD (42)	Temp_Limb (25)
64	112	88	56	96	264	64	16	16	64	48	144
8	14	11	7	12	33	8	2	2	8	6	18
varies	varies	varies	varies	varies	varies	varies	varies	varies	varies	varies	varies

Figure 4.3-14. OMPS Limb Profiler Short Exposure First Packet Format

MIDDLE PACKET Qty. 104

	PACKET PRIMARY HEADER							User Data Field		
	Verson No.	Packet Identification			Packet Sequence		Packet Length	Science		
		Type Indicator	Sec Hdr Flag	APID	Sequence Flags	Sequence Count		CCD data (middle)		
Bits	3	1	1	11	2	14	16	8144	TOTAL 8192	TOTAL Middle Packets 851968
Octets	2				2		2	1018	1024	106496
Value	000	0	0	0x233	00	varies	0x03F9	varies		

Telemetry Packet

Middle Packet

Figure 4.3-15. OMPS Limb Profiler Short Exposure Middle Packet Format

Check the JPSS MIS Server at https://jpssmis.gsfc.nasa.gov/frontmenu_dsp.cfm to verify that this is the correct version prior to use.

LAST PACKET

	PACKET PRIMARY HEADER							User Data Field			
	Verson No.	Packet Identification			Packet Sequence		Packet Length	Science			
		Type Indicator	Sec Hdr Flag	APID	Sequence Flags	Sequence Count		CCD data (end)	Pad Byte	TOTAL	RDR TOTAL
Bits	3	1	1	11	2	14	16	808	8	864	861024
Octets	2				2		2	101	1	108	107628
Value	000	0	0	0x233	10	varies	0x0065	varies	fixed		

Telemetry Packet

Last Packet

Figure 4.3-16. OMPS Limb Profiler Short Exposure Last Packet Format

Table 4.3-7. OMPS Limb Profiler Short Exposure Packet User Data Fields

Start Bit	Bit Size	Mnemonic Name	Description	Units OR State Value	Conversion Coefficients (formula or C5,C4,C3,C2,C1,C0) OR State Name	Data Type
0	16	CCSDS_RDR_VER	Version Number of RDR	N/A	N/A	U
16	8	CCSDS_CONT_COUNT	Number of segmented CCSDS packet sequences - 1	N/A	N/A	U
24	8	CCSDS_CONT_FLAG	Indicates if this CCSDS packet begins an RDR	N/A	N/A	U
32	8	SENSOR_ID	OMPS Sensor Identification (not for Dwell or FSW Bootup status)	N/A	N/A	U
40	8	FSW_VERSION	Flight Software Version Number (not for Dwell or FSW Bootup status) -- major version	N/A	N/A	U
48	8	FSW_VERSION	Flight Software Version Number (not for Dwell or FSW Bootup status) -- minor version	N/A	N/A	U
56	2	MEB_BOOT_IMG_ID	Boot Image Identifier (not for Dwell or FSW Bootup status)	0 1 2	Not Used As-Launched Modifiable	U
58	5	MEB_SBC_ID	Single Board Computer Identifier (not for Dwell or FSW Bootup status)	N/A	N/A	U
63	1	MEB_SIDE	Active MEB Side (not for Dwell or FSW Bootup status)	0 1	MEB2 MEB1	U
64	8	FSW_INIT_STATUS	Flight Software Initialization Status (not for Dwell or FSW Bootup status)	0 -1	OK ERROR	S
72	8	FSW_INIT_CODE	Flight Software Initialization Code (not for Dwell or FSW Bootup status)	N/A	N/A	U
80	8	FSW_PROTECTED	OMPS Protected State Indicator (not for Dwell or FSW Bootup status)	1 0	PROTECTED UNPROTECTED	U
88	4	MEB_FLASH_PWR	SBC Flash Memory Power State (not for Dwell or FSW Bootup status)	0 1	OFF ON	U
92	4	EEPROM_SIDE	EEPROM side used to boot	0 1	Boot Side 1 Boot Side 2	U
96	7	M_MCR_SPARE6	Unused bits of the Miscellaneous Control Register	N/A	N/A	U
103	1	M_MCR_L_SP_CTRL	Limb Signal Processing Spare Control	0 1	OFF ON	U
104	3	M_MCR_SPARE5	Unused bits of the Miscellaneous Control Register	N/A	N/A	U
107	1	M_MCR_N_SP_CTRL	Nadir Signal Processing Spare Control	0 1	OFF ON	U
108	3	M_MCR_SPARE4	Unused bits of the Miscellaneous Control Register	N/A	N/A	U
111	1	M_MCR_TEST_2	Test connector	0 1	OFF ON	U
112	7	M_MCR_SPARE3	Unused bits of the Miscellaneous Control Register	N/A	N/A	U
119	9	M_CAL_LED_STATE	State of the Calibration LEDs	0 257 272 273	ALL_OFF NADIR_TC_ON NADIR_NP_ON LIMB_ON	U
128	7	M_THCR_SPARE7	Unused bits of the TEC & Heater Control & Status Register	N/A	N/A	U
135	1	M_THCR_DAC_BUSY	State of the DACBUSY line	0 1	NOT_BUSY BUSY	U
136	3	M_THCR_SPARE6	Unused bits of the TEC & Heater Control & Status Register	N/A	N/A	U
139	1	M_TC_TEC_STATE	State of the TC TEC Control	0 1	OFF ON	U
140	3	M_THCR_SPARE5	Unused bits of the TEC & Heater Control & Status Register	N/A	N/A	U
143	1	M_NP_TEC_STATE	State of the NP TEC Control	0 1	OFF ON	U
144	3	M_THCR_SPARE4	Unused bits of the TEC & Heater Control & Status Register	N/A	N/A	U
147	1	M_LP_TEC_STATE	State of the LP TEC Control	0 1	OFF ON	U
148	3	M_THCR_SPARE3	Unused bits of the TEC & Heater Control & Status Register	N/A	N/A	U
151	1	M_TC_HTR_STATE	State of the TC CCD Window Heater Control	0 1	OFF ON	U

Check the JPSS MIS Server at https://jpssmis.gsfc.nasa.gov/frontmenu_dsp.cfm to verify that this is the correct version prior to use.

Start Bit	Bit Size	Mnemonic Name	Description	Units OR State Value	Conversion Coefficients (formula or C5,C4,C3,C2,C1,C0) OR State Name	Data Type
152	3	M_THCR_SPARE2	Unused bits of the TEC & Heater Control & Status Register	N/A	N/A	U
155	1	M_NP_HTR_STATE	State of the NP CCD Window Heater Control	0 1	OFF ON	U
156	3	M_THCR_SPARE1	Unused bits of the TEC & Heater Control & Status Register	N/A	N/A	U
159	1	M_LP_HTR_STATE	State of the LP CCD Window Heater Control	0 1	OFF ON	U
160	1	MEB_LP_HTR_PWR	LP Window Heater Power State	0 1	PWR_ENABLED PWR_DISABLED	U
161	1	MEB_NP_HTR_PWR	NP Window Heater Power State	0 1	PWR_ENABLED PWR_DISABLED	U
162	1	MEB_TC_HTR_PWR	TC Window Heater Power State	0 1	PWR_ENABLED PWR_DISABLED	U
163	1	MEB_LP_TEC_PWR	LP TEC Power State	0 1	PWR_ENABLED PWR_DISABLED	U
164	1	MEB_NP_TEC_PWR	NP TEC Power State	0 1	PWR_ENABLED PWR_DISABLED	U
165	1	MEB_TC_TEC_PWR	TC TEC Power State	0 1	PWR_ENABLED PWR_DISABLED	U
166	1	MEB_L_MTR_RELAY	Limb Motor Relay Position	0 1	CLOSED OPEN	U
167	1	MEB_N_MTR_RELAY	Nadir Motor Relay Position	0 1	CLOSED OPEN	U
168	1	MEB_L_PWR	Limb Power Supply State	0 1	PWR_ENABLED PWR_DISABLED	U
169	1	MEB_N_PWR	Nadir Power Supply State	0 1	PWR_ENABLED PWR_DISABLED	U
170	1	MEB_BOOT_SEL_1	Boot Select Bit 1 Relay Position	0 1	CLOSED OPEN	U
171	1	MEB_BOOT_SEL_0	Boot Select Bit 0 Relay Position	0 1	CLOSED OPEN	U
172	1	MEB_L_CLKDRV_RED	Limb Clock Drive Relay Redundant Position	0 1	ALL_REDUNDANT NOT_REDUNDANT	U
173	1	MEB_L_CLKDRV_PRI	Limb Clock Drive Relay Primary Position	0 1	ALL_PRIMARY NOT_PRIMARY	U
174	1	MEB_N_CLKDRV_RED	Nadir Clock Drive Relay Redundant Position	0 1	ALL_REDUNDANT NOT_REDUNDANT	U
175	1	MEB_N_CLKDRV_PRI	Nadir Clock Drive Relay Primary Position	0 1	ALL_PRIMARY NOT_PRIMARY	U
176	10	M_MCSR_SPARE6	Unused register bits	0 1	OPEN CLOSED	U
186	1	M_L_XMEB_RELAY	Position of Non-Operating MEB Limb Motor Relay	0 1	CLOSED OPEN	U
187	1	M_N_XMEB_RELAY	Position of Non-Operating MEB Nadir Motor Relay	0 1	CLOSED OPEN	U
188	3	M_MCSR_SPARE5	Unused register bits	0 1	OPEN CLOSED	U
191	1	M_MTR_ACTIVE	Motor Control Circuitry Active	0 1	INACTIVE ACTIVE	U
192	3	M_MCSR_SPARE4	Unused register bits	0 1	OPEN CLOSED	U
195	1	M_RELAY_POS	Relay Position	0 1	OPEN CLOSED	U
196	3	M_MCSR_SPARE3	Unused register bits	0 1	OPEN CLOSED	U
199	1	M_MTR_SELECT	Motor Select	0 1	NADIR LIMB	U

Start Bit	Bit Size	Mnemonic Name	Description	Units OR State Value	Conversion Coefficients (formula or C5,C4,C3,C2,C1,C0) OR State Name	Data Type
200	3	M_MCSR_SPARE2	Unused register bits	0 1	OPEN CLOSED	U
203	1	M_RES_ENABLE	Resolver Circuitry Enable	0 1	DISABLED ENABLED	U
204	3	M_MCSR_SPARE1	Unused register bits	0 1	OPEN CLOSED	U
207	1	M_MTR_RES_PWR	Motor and Resolver Power State	0 1	OFF ON	U
208	1	M_L_RESOLV_BUSY	Limb Resolver Data Register - Busy	0 1	NOT_BUSY BUSY	U
209	15	M_L_RESOLV_SPARE	Limb Resolver Data Register - Unused Bits	N/A	N/A	U
224	16	M_L_RESOLV_DATA	Limb Resolver Data Register - Resolver Data	N/A	N/A	U
240	7	M_LMP_SPARE4	Limb Motor Parameter Register - Unused Bits	0 1	CW CCW	U
247	1	M_L_DIRECTION	Limb Motor Direction	0 1	CW CCW	U
248	2	M_LMP_SPARE3	Limb Motor Parameter Register - Unused Bits	0 1	CW CCW	U
250	2	M_L_SPEED	Limb Motor Speed	0 1 2 3	STEPS_SEC_300 STEPS_SEC_200 STEPS_SEC_100 STEPS_SEC_10	U
252	2	M_LMP_SPARE2	Limb Motor Parameter Register - Unused Bits	0 1	CW CCW	U
254	2	M_L_PHASE	Limb Motor Phase	0 1 2 3	INVALID A_MINUS_B_PLUS A_MINUS_B_MINUS A_PLUS_B_MINUS	U
256	4	M_LMP_SPARE1	Limb Motor Parameter Register - Unused Bits	0 1	CW CCW	U
260	12	M_L_STEP_COUNT	Limb Motor Step Count	N/A	N/A	U
272	8	M_L_RETRIES	Limb Motor Retries	N/A	N/A	U
280	16	M_L_DESTINATION	Limb Diffuser Move Destination	N/A	N/A	U
296	16	M_LP_TEC_SETPT	Commanded LP TEC Setpoint	N/A	N/A	U
312	16	M_LP_HTR_SETPT	Commanded LP CCD Window Heater Setpoint	N/A	N/A	U
328	16	M_L_POSITION	Limb Diffuser Motor Position	N/A	N/A	U
344	8	M_L_POS_ID	Limb Diffuser Position ID	N/A	N/A	U
352	8	L_TIM_PAT_VER	Limb Active Timing Pattern Table Version Number -- major version	N/A	N/A	U
360	8	L_TIM_PAT_VER	Limb Active Timing Pattern Table Version Number -- minor version	N/A	N/A	U
368	16	L_ROWS	Rows of Limb Profiler CCD data	N/A	N/A	U
384	16	L_COLS	Columns of Limb Profiler CCD data	N/A	N/A	U
400	16	L_IMG_STATUS	Limb Image Processing Status Word	N/A	N/A	U
416	32	L_INT_HOLD_TIME	Limb TPG Integration Hold Time	milliseconds	-, -, -, -, 0.1, 0	U

Start Bit	Bit Size	Mnemonic Name	Description	Units OR State Value	Conversion Coefficients (formula or C5,C4,C3,C2,C1,C0) OR State Name	Data Type
448	8	L_PROFILE_ID	Active Limb Profile ID	N/A	N/A	U
456	8	L_PROFILE_VER	Limb Imaging Profile Table Version Number -- major version	N/A	N/A	U
464	8	L_PROFILE_VER	Limb Imaging Profile Table Version Number -- minor version	N/A	N/A	U
472	16	L_TIM_PAT_TBL	Limb Timing Pattern Table ID	N/A	N/A	U
488	16	L1_APID	Limb Profiler Image #1 Application ID	N/A	N/A	U
504	16	L2_APID	Limb Profiler Image #2 Application ID	N/A	N/A	U
520	8	L_LIN_CORR	Limb Linearity Correction Flag	0 1	DISABLED ENABLED	U
528	16	L_LIN_CORR_TBL	Limb Linearity Correction Table ID	N/A	N/A	U
544	16	L_FIXED_COADDS	Limb Fixed Coadd Count	N/A	N/A	U
560	8	L_REORDER_IMG	Limb Reorder Image Flag	0 1	DISABLED ENABLED	U
568	8	L_GAIN_CORR	Limb Gain Correction Flag	0 1	DISABLED ENABLED	U
576	16	L_GAIN_CORR_TBL	Limb Gain Correction Table ID	N/A	N/A	U
592	8	L1_BIN_IMG	Limb Profiler Image #1 Bin Image Flag	0 1	DISABLED ENABLED	U
600	16	L1_SAMP_TBL	Limb Profiler Image #1 Sample Table ID	N/A	N/A	U
616	8	L2_BIN_IMG	Limb Profiler Image #2 Bin Image Flag	0 1	DISABLED ENABLED	U
624	16	L2_SAMP_TBL	Limb Profiler Image #2 Sample Table ID	N/A	N/A	U
640	8	L_2ND_IMAGE	Limb Profiler Second Image Flag	0 1	FALSE TRUE	U
648	8	L_GAIN_TBL_VER	Limb Gain Table Version Number -- major version	N/A	N/A	U
656	8	L_GAIN_TBL_VER	Limb Gain Table Version Number -- major version	N/A	N/A	U
664	8	L_LIN_TBL_VER	Limb Linearity Correction Table Version Number -- major version	N/A	N/A	U
672	8	L_LIN_TBL_VER	Limb Linearity Correction Table Version Number -- major version	N/A	N/A	U
680	8	L1_SAMP_TBL_VER	Limb Image #1 Sample Table Version Number -- major version	N/A	N/A	U
688	8	L1_SAMP_TBL_VER	Limb Image #1 Sample Table Version Number -- major version	N/A	N/A	U
696	8	L2_SAMP_TBL_VER	Limb Image #2 Sample Table Version Number -- major version	N/A	N/A	U
704	8	L2_SAMP_TBL_VER	Limb Image #2 Sample Table Version Number -- major version	N/A	N/A	U
712	16	L1_LAST_IMG_DOY	Time stamp of last good Limb Image #1 (day of year)	N/A	N/A	U
728	32	L1_LAST_IMG_MSEC	Time stamp of last good Limb Image #1	milliseconds	N/A	U
760	16	L1_LAST_IMG_USEC	Time stamp of last good Limb Image #1	microseconds	N/A	U
776	16	M_I_CAL_LED	Current in the active Calibration LED	milliamps	-, -, -, -, 0.006125, 0	S
792	16	M_T_MTR_DRV_BD	Temperature - Motor Driver Board	Celsius	-, -, -, -, 0.0486, -273.15	S

Start Bit	Bit Size	Mnemonic Name	Description	Units OR State Value	Conversion Coefficients (formula or C5,C4,C3,C2,C1,C0) OR State Name	Data Type
808	16	L_T_TELESCOPE	Temperature - Limb Telescope	Celsius	-32768 to 83: -, -, -8.469E-5, 0.02033, -1.99, 128.8 84 to 343: -, -, -1.465E-6, 0.001323, -0.4741, 86.11 344 to 1795: -, -, -1.044E-8, 4.681E-5, -0.08272, 43.02 1796 to 32767: -, -, -9.53E-11, 1.817E-6, -0.01566, 7.7	S
824	16	L_T_PRISM_1	Temperature - Limb Prism #1	Celsius	-32768 to 83: -, -, -8.469E-5, 0.02033, -1.99, 128.8 84 to 343: -, -, -1.465E-6, 0.001323, -0.4741, 86.11 344 to 1795: -, -, -1.044E-8, 4.681E-5, -0.08272, 43.02 1796 to 32767: -, -, -9.53E-11, 1.817E-6, -0.01566, 7.7	S
840	16	L_T_PRISM_2	Temperature - Limb Prism #2	Celsius	-32768 to 83: -, -, -8.469E-5, 0.02033, -1.99, 128.8 84 to 343: -, -, -1.465E-6, 0.001323, -0.4741, 86.11 344 to 1795: -, -, -1.044E-8, 4.681E-5, -0.08272, 43.02 1796 to 32767: -, -, -9.53E-11, 1.817E-6, -0.01566, 7.7	S
856	16	L_T_CCD	Temperature - Limb CCD	Celsius	-, -, -, -, -0.0238, 58.05	S
872	16	M_V_MTR_RES_5V	Voltage - Motor/Resolver Electronics +5V	Volts	-, -, -, -, 0.000949, 0	S
888	16	M_V_RES_12V	Voltage - Resolver Electronics +12V	Volts	-, -, -, -, 0.00311, 0	S
904	16	M_V_RES_M12V	Voltage - Resolver Electronics -12V	Volts	-, -, -, -, 0.00311, 0	S
920	16	L_T_MOTOR	Temperature - Limb Diffuser Motor	Celsius	-32768 to 83: -, -, -8.469E-5, 0.02033, -1.99, 128.8 84 to 343: -, -, -1.465E-6, 0.001323, -0.4741, 86.11 344 to 1795: -, -, -1.044E-8, 4.681E-5, -0.08272, 43.02 1796 to 32767: -, -, -9.53E-11, 1.817E-6, -0.01566, 7.7	S
936	16	L_T_HOUSING	Temperature - Limb Housing	Celsius	-32768 to 83: -, -, -8.469E-5, 0.02033, -1.99, 128.8 84 to 343: -, -, -1.465E-6, 0.001323, -0.4741, 86.11 344 to 1795: -, -, -1.044E-8, 4.681E-5, -0.08272, 43.02 1796 to 32767: -, -, -9.53E-11, 1.817E-6, -0.01566, 7.7	S
952	16	L_T_SUN_SIDE	Temperature - Limb Sun Side	Celsius	-32768 to 83: -, -, -8.469E-5, 0.02033, -1.99, 128.8 84 to 343: -, -, -1.465E-6, 0.001323, -0.4741, 86.11 344 to 1795: -, -, -1.044E-8, 4.681E-5, -0.08272, 43.02 1796 to 32767: -, -, -9.53E-11, 1.817E-6, -0.01566, 7.7	S
968	16	L_T_DARK_SIDE	Temperature - Limb Dark Side	Celsius	-32768 to 83: -, -, -8.469E-5, 0.02033, -1.99, 128.8 84 to 343: -, -, -1.465E-6, 0.001323, -0.4741, 86.11 344 to 1795: -, -, -1.044E-8, 4.681E-5, -0.08272, 43.02 1796 to 32767: -, -, -9.53E-11, 1.817E-6, -0.01566, 7.7	S
984	16	L_T_COND_BAR	Temperature - Limb Conductor Bar	Celsius	-32768 to 83: -, -, -8.469E-5, 0.02033, -1.99, 128.8 84 to 343: -, -, -1.465E-6, 0.001323, -0.4741, 86.11 344 to 1795: -, -, -1.044E-8, 4.681E-5, -0.08272, 43.02 1796 to 32767: -, -, -9.53E-11, 1.817E-6, -0.01566, 7.7	S
1000	16	L_T_WINDOW	Temperature - Limb Window	Celsius	-, -, -, -, 0.0483, -273.15	S
1016	16	L_P_HTR_SET	Power Setpoint - Limb CCD Window Heater	Watts	-, -, -, 5.76E-8, 0 ,0	S
1032	16	L_T_SIG_BD	Temperature - Nadir Signal Board	Celsius	-, -, -, -, 0.0486, -273.15	S
1048	16	L_T_TIM_BD	Temperature - Nadir Timing Board	Celsius	-, -, -, -, 0.0486, -273.15	S
1064	32	N/A	HW Start Tag (if image is not sampled)	N/A	N/A	U
varies	varies	N/A	CCD Data (# pixels x 32 bits/pixel)	N/A	N/A	U
varies	32	N/A	HW End Tag (if image is not sampled)	N/A	N/A	U
varies	8	N/A	Pad Byte	N/A	N/A	U

4.3.4.1.5 Calibration Data

The OMPS has three calibration packet formats, one for each CCD. Each packet produced contains a single CCD image. During calibration orbits, the OMPS produces multiple packets of each type. Solar, linearity and dark current calibration measurements are made for each CCD. The solar images measure the spectral and radiometric response of the CCD. Each type of calibration requires multiple images of varying sizes. The quantity, size and duration of the calibration images is still being determined.

Limb calibrations start approximately 17 deg. past the northern terminator, when the sun fully illuminates the on board diffusers. Because the diffuser takes up only a portion of the total Nadir Column field of view, seven overlapping images are necessary to complete the Nadir Column radiometric/spectral calibration. The Nadir Profiler radiometric/spectral calibration is obtained when the diffuser is in the middle position of the seven Nadir Column images. Dark current and two linearity images for each spectrometer/CCD follow when the OMPS is in the shadow of the Earth.

The structure of the calibration packets is described in the following subsections.

4.3.4.1.6 Nadir Total Column Calibration

The OMPS produces Nadir Total Column collects its nominal calibration data in APID 564. Solar, linearity and dark current calibrations are performed in a single orbit every week. Because the solar, linearity and dark current calibrations require different image sizes, the structure of APID 564 is illustrated as a variable-sized grouped packet in Figure 4.3-17, Figure 4.3-18, Figure 4.3-19 and Figure 4.3-20. It is possible but not expected for APID 564 to be a single standalone packet. The maximum size of a packet with a single image is included in the footnotes to Table 4.3-1. Since a maximum-sized packet will span multiple grouped packets, the first packet of a continuation grouped packet is shown in Figure 4.3-20. The user data fields are listed in Table 4.3-8 assuming there is a single grouped packet.

Check the JPSS MIS Server at https://jpssmis.gsfc.nasa.gov/frontmenu_dsp.cfm to verify that this is the correct version prior to use.

FIRST PACKET, first group

	PACKET PRIMARY HEADER							SECONDARY HEADER			User Data Field						
	Verson No.	Packet Identification			Packet Sequence		Packet Length	Start of Scan	Packets in RDR - 1	Spare	OMPS Header			Engineering Data	Science		
		Type Indicator	Sec Hdr Flag	APID	Sequence Flags	Sequence Count					RDR Version	Cont Count -1	Cont Flag	Engineering Data Sections	HW Start Tag (if not sampled)	CCD data (start)	
Bits	3	1	1	11	2	14	16	64	8	8	16	8	8	1208	32	varies	TOTAL 8192
Octets	2				2		2	8	1	1	2	1	1	151	4	varies	1024
Value	000	0	1	0x234	01	varies	0x03F9	varies	varies	0x00	varies	varies	varies	varies	varies	varies	

Telemetry Packet

Secondary Header

Engineering Data													
Sensor_Info (7)	Mech_SD (59)	Mech_Nadir (62)	Mech_Nadir_SD (73)	Nadir_SD (71)	Nadir_IMG_Profile_SD (50)	Nadir_TC_SD (66)	Curr_LED_SD (26)	Temp_Mech_SD (30)	Temp_Nadir_SD (28)	Volt_Mech_SD (42)	Temp_Nadir (24)	Temp_NP (36)	Temp_TC (35)
64	112	88	88	64	360	96	16	16	48	48	176	16	16
8	14	11	11	8	45	12	2	2	6	6	22	2	2
varies	varies	varies	varies	varies	varies	zeros	varies	varies	varies	varies	varies	varies	varies

Figure 4.3-17. OMPS First Grouped Nadir Total Column Calibration First Packet Format

MIDDLE PACKET

	PACKET PRIMARY HEADER							User Data Field	
	Verson No.	Packet Identification			Packet Sequence		Packet Length	Science	
		Type Indicator	Sec Hdr Flag	APID	Sequence Flags	Sequence Count		CCD data (middle)	TOTAL
Bits	3	1	1	11	2	14	16	8144	8192
Octets	2				2		2	1018	1024
Value	000	0	0	0x234	00	varies	0x03F9	varies	

Telemetry Packet

Middle Packet

Figure 4.3-18. OMPS Grouped Nadir Total Column Calibration Middle Packet Format

Check the JPSS MIS Server at https://jpssmis.gsfc.nasa.gov/frontmenu_dsp.cfm to verify that this is the correct version prior to use.

LAST PACKET

	PACKET PRIMARY HEADER							User Data Field			
	Verson No.	Packet Identification			Packet Sequence		Packet Length	Science			
		Type Indicator	Sec Hdr Flag	APID	Sequence Flags	Sequence Count		CCD data (end)	HW End Tag (if not sampled)	Pad Byte (if necessary)	TOTAL
Bits	3	1	1	11	2	14	16	varies	32	8	varies
Octets	2				2		2	varies	4	1	varies
Value	000	0	0	0x234	10	varies	varies	varies	varies	fixed	

Telemetry Packet

Last Packet

Figure 4.3-19. OMPS Grouped Nadir Total Column Calibration Last Packet Format

FIRST PACKET of a group, but not of the f

	PACKET PRIMARY HEADER							SECONDARY HEADER			User Data Field				
	Verson No.	Packet Identification			Packet Sequence		Packet Length	Start of Scan	Packets in RDR - 1	Spare	OMPS Header			Science	
		Type Indicator	Sec Hdr Flag	APID	Sequence Flags	Sequence Count					RDR Version	Cont Count -1	Cont Flag	CCD data (middle)	TOTAL
Bits	3	1	1	11	2	14	16	64	8	8	16	8	8	8032	8192
Octets	2				2		2	8	1	1	2	1	1	1004	1024
Value	000	0	1	0x234	01	varies	0x03F9	varies	varies	0x0	varies	varies	varies	varies	

Telemetry Packet

Secondary Header Present

Figure 4.3-20. OMPS Grouped Nadir Total Column Calibration First Packet Format

Table 4.3-8. OMPS Nadir Total Column Calibration Packet User Data Field

Start Bit	Bit Size	Mnemonic Name	Description	Units OR State Value	Conversion Coefficients (formula or C5,C4,C3,C2,C1,C0) OR State Name	Data Type
0	16	CCSDS_RDR_VER	Version Number of RDR	N/A	N/A	U
16	8	CCSDS_CONT_COUNT	Number of segmented CCSDS packet sequences - 1	N/A	N/A	U
24	8	CCSDS_CONT_FLAG	Indicates if this CCSDS packet begins an RDR	N/A	N/A	U
32	8	SENSOR_ID	OMPS Sensor Identification (not for Dwell or FSW Bootup status)	N/A	N/A	U
40	8	FSW_VERSION	Flight Software Version Number (not for Dwell or FSW Bootup status) -- major version	N/A	N/A	U
48	8	FSW_VERSION	Flight Software Version Number (not for Dwell or FSW Bootup status) -- minor version	N/A	N/A	U
56	2	MEB_BOOT_IMG_ID	Boot Image Identifier (not for Dwell or FSW Bootup status)	0 1 2	Not Used As-Launched Modifiable	U
58	5	MEB_SBC_ID	Single Board Computer Identifier (not for Dwell or FSW Bootup status)	N/A	N/A	U
63	1	MEB_SIDE	Active MEB Side (not for Dwell or FSW Bootup status)	0 1	MEB2 MEB1	U
64	8	FSW_INIT_STATUS	Flight Software Initialization Status (not for Dwell or FSW Bootup status)	0 -1	OK ERROR	S
72	8	FSW_INIT_CODE	Flight Software Initialization Code (not for Dwell or FSW Bootup status)	N/A	N/A	U
80	8	FSW_PROTECTED	OMPS Protected State Indicator (not for Dwell or FSW Bootup status)	1 0	PROTECTED UNPROTECTED	U
88	4	MEB_FLASH_PWR	SBC Flash Memory Power State (not for Dwell or FSW Bootup status)	0 1	OFF ON	U
92	4	EEPROM_SIDE	EEPROM side used to boot	0 1	Boot Side 1 Boot Side 2	U
96	7	M_MCR_SPARE6	Unused bits of the Miscellaneous Control Register	N/A	N/A	U
103	1	M_MCR_L_SP_CTRL	Limb Signal Processing Spare Control	0 1	OFF ON	U
104	3	M_MCR_SPARE5	Unused bits of the Miscellaneous Control Register	N/A	N/A	U
107	1	M_MCR_N_SP_CTRL	Nadir Signal Processing Spare Control	0 1	OFF ON	U
108	3	M_MCR_SPARE4	Unused bits of the Miscellaneous Control Register	N/A	N/A	U
111	1	M_MCR_TEST_2	Test connector	0 1	OFF ON	U
112	7	M_MCR_SPARE3	Unused bits of the Miscellaneous Control Register	N/A	N/A	U
119	9	M_CAL_LED_STATE	State of the Calibration LEDs	0 257 272 273	ALL_OFF NADIR_TC_ON NADIR_NP_ON LIMB_ON	U
128	7	M_THCR_SPARE7	Unused bits of the TEC & Heater Control & Status Register	N/A	N/A	U
135	1	M_THCR_DAC_BUSY	State of the DACBUSY line	0 1	NOT_BUSY BUSY	U
136	3	M_THCR_SPARE6	Unused bits of the TEC & Heater Control & Status Register	N/A	N/A	U
139	1	M_TC_TEC_STATE	State of the TC TEC Control	0 1	OFF ON	U
140	3	M_THCR_SPARE5	Unused bits of the TEC & Heater Control & Status Register	N/A	N/A	U
143	1	M_NP_TEC_STATE	State of the NP TEC Control	0 1	OFF ON	U
144	3	M_THCR_SPARE4	Unused bits of the TEC & Heater Control & Status Register	N/A	N/A	U
147	1	M_LP_TEC_STATE	State of the LP TEC Control	0 1	OFF ON	U
148	3	M_THCR_SPARE3	Unused bits of the TEC & Heater Control & Status Register	N/A	N/A	U
151	1	M_TC_HTR_STATE	State of the TC CCD Window Heater Control	0 1	OFF ON	U

Check the JPSS MIS Server at https://jpssmis.gsfc.nasa.gov/frontmenu_dsp.cfm to verify that this is the correct version prior to use.

Start Bit	Bit Size	Mnemonic Name	Description	Units OR State Value	Conversion Coefficients (formula or C5,C4,C3,C2,C1,C0) OR State Name	Data Type
152	3	M_THCR_SPARE2	Unused bits of the TEC & Heater Control & Status Register	N/A	N/A	U
155	1	M_NP_HTR_STATE	State of the NP CCD Window Heater Control	0 1	OFF ON	U
156	3	M_THCR_SPARE1	Unused bits of the TEC & Heater Control & Status Register	N/A	N/A	U
159	1	M_LP_HTR_STATE	State of the LP CCD Window Heater Control	0 1	OFF ON	U
160	1	MEB_LP_HTR_PWR	LP Window Heater Power State	0 1	PWR_ENABLED PWR_DISABLED	U
161	1	MEB_NP_HTR_PWR	NP Window Heater Power State	0 1	PWR_ENABLED PWR_DISABLED	U
162	1	MEB_TC_HTR_PWR	TC Window Heater Power State	0 1	PWR_ENABLED PWR_DISABLED	U
163	1	MEB_LP_TEC_PWR	LP TEC Power State	0 1	PWR_ENABLED PWR_DISABLED	U
164	1	MEB_NP_TEC_PWR	NP TEC Power State	0 1	PWR_ENABLED PWR_DISABLED	U
165	1	MEB_TC_TEC_PWR	TC TEC Power State	0 1	PWR_ENABLED PWR_DISABLED	U
166	1	MEB_L_MTR_RELAY	Limb Motor Relay Position	0 1	CLOSED OPEN	U
167	1	MEB_N_MTR_RELAY	Nadir Motor Relay Position	0 1	CLOSED OPEN	U
168	1	MEB_L_PWR	Limb Power Supply State	0 1	PWR_ENABLED PWR_DISABLED	U
169	1	MEB_N_PWR	Nadir Power Supply State	0 1	PWR_ENABLED PWR_DISABLED	U
170	1	MEB_BOOT_SEL_1	Boot Select Bit 1 Relay Position	0 1	CLOSED OPEN	U
171	1	MEB_BOOT_SEL_0	Boot Select Bit 0 Relay Position	0 1	CLOSED OPEN	U
172	1	MEB_L_CLKDRV_RED	Limb Clock Drive Relay Redundant Position	0 1	ALL_REDUNDANT NOT_REDUNDANT	U
173	1	MEB_L_CLKDRV_PRI	Limb Clock Drive Relay Primary Position	0 1	ALL_PRIMARY NOT_PRIMARY	U
174	1	MEB_N_CLKDRV_RED	Nadir Clock Drive Relay Redundant Position	0 1	ALL_REDUNDANT NOT_REDUNDANT	U
175	1	MEB_N_CLKDRV_PRI	Nadir Clock Drive Relay Primary Position	0 1	ALL_PRIMARY NOT_PRIMARY	U
176	10	M_MCSR_SPARE6	Unused register bits	0 1	OPEN CLOSED	U
186	1	M_L_XMEB_RELAY	Position of Non-Operating MEB Limb Motor Relay	0 1	CLOSED OPEN	U
187	1	M_N_XMEB_RELAY	Position of Non-Operating MEB Nadir Motor Relay	0 1	CLOSED OPEN	U
188	3	M_MCSR_SPARE5	Unused register bits	0 1	OPEN CLOSED	U
191	1	M_MTR_ACTIVE	Motor Control Circuitry Active	0 1	INACTIVE ACTIVE	U
192	3	M_MCSR_SPARE4	Unused register bits	0 1	OPEN CLOSED	U
195	1	M_RELAY_POS	Relay Position	0 1	OPEN CLOSED	U
196	3	M_MCSR_SPARE3	Unused register bits	0 1	OPEN CLOSED	U
199	1	M_MTR_SELECT	Motor Select	0 1	NADIR LIMB	U

Start Bit	Bit Size	Mnemonic Name	Description	Units OR State Value	Conversion Coefficients (formula or C5,C4,C3,C2,C1,C0) OR State Name	Data Type
200	3	M_MCSR_SPARE2	Unused register bits	0 1	OPEN CLOSED	U
203	1	M_RES_ENABLE	Resolver Circuitry Enable	0 1	DISABLED ENABLED	U
204	3	M_MCSR_SPARE1	Unused register bits	0 1	OPEN CLOSED	U
207	1	M_MTR_RES_PWR	Motor and Resolver Power State	0 1	OFF ON	U
208	1	M_N_RESOLV_BUSY	Nadir Resolver Data Register - Busy	0 1	NOT_BUSY BUSY	U
209	15	M_N_RESOLV_SPARE	Nadir Resolver Data Register - Unused Bits	N/A	N/A	U
224	16	M_N_RESOLV_DATA	Nadir Resolver Data Register - Resolver Data	N/A	N/A	U
240	7	M_NMP_SPARE4	Nadir Motor Parameter Register - Unused Bits	0 1	CW CCW	U
247	1	M_N_DIRECTION	Nadir Motor Direction	0 1	CW CCW	U
248	2	M_NMP_SPARE3	Nadir Motor Parameter Register - Unused Bits	0 1	CW CCW	U
250	2	M_N_SPEED	Nadir Motor Speed	0 1 2 3	STEPS_SEC_300 STEPS_SEC_200 STEPS_SEC_100 STEPS_SEC_10	U
252	2	M_NMP_SPARE2	Nadir Motor Parameter Register - Unused Bits	0 1	CW CCW	U
254	2	M_N_PHASE	Nadir Motor Phase	0 1 2 3	INVALID A_MINUS_B_PLUS A_MINUS_B_MINUS A_PLUS_B_MINUS	U
256	4	M_NMP_SPARE1	Nadir Motor Parameter Register - Unused Bits	0 1	CW CCW	U
260	12	M_N_STEP_COUNT	Nadir Motor Step Count	N/A	N/A	U
272	8	M_N_RETRIES	Nadir Motor Retries	N/A	N/A	U
280	16	M_N_DESTINATION	Nadir Diffuser Move Destination	N/A	N/A	U
296	16	M_TC_TEC_SETPT	Commanded TC TEC Setpoint	N/A	N/A	U
312	16	M_TC_HTR_SETPT	Commanded TC CCD Window Heater Setpoint	N/A	N/A	U
328	16	M_NP_TEC_SETPT	Commanded NP TEC Setpoint	N/A	N/A	U
344	16	M_NP_HTR_SETPT	Commanded NP CCD Window Heater Setpoint	N/A	N/A	U
360	16	M_N_POSITION	Nadir Diffuser Motor Position	N/A	N/A	U
376	8	M_N_POS_ID	Nadir Diffuser Position ID	N/A	N/A	U
384	8	N_TIM_PAT_VER	Nadir Active Timing Pattern Table Version Number -- major version	N/A	N/A	U
392	8	N_TIM_PAT_VER	Nadir Active Timing Pattern Table Version Number -- minor version	N/A	N/A	U
400	16	N_IMG_STATUS	Nadir Image Processing Status	N/A	N/A	U
416	32	N_INT_HOLD_TIME	Nadir TPG Integration Hold Time	milliseconds	-, -, -, -, 0.1, 0	U

Check the JPSS MIS Server at https://jpssmis.gsfc.nasa.gov/frontmenu_dsp.cfm to verify that this is the correct version prior to use.

Start Bit	Bit Size	Mnemonic Name	Description	Units OR State Value	Conversion Coefficients (formula or C5,C4,C3,C2,C1,C0) OR State Name	Data Type
448	8	N_PROFILE_ID	Active Nadir Profile ID	N/A	N/A	U
456	8	N_PROFILE_VER	Nadir Imaging Profile Table Version Number -- major version	N/A	N/A	U
464	8	N_PROFILE_VER	Nadir Imaging Profile Table Version Number -- minor version	N/A	N/A	U
472	16	N_TIM_PAT_TBL	Nadir Timing Pattern Table ID	N/A	N/A	U
488	16	TC_APID	Nadir Total Column Application ID	N/A	N/A	U
504	16	NP_APID	Nadir Profiler Application ID	N/A	N/A	U
520	8	TC_LIN_CORR	Nadir Total Column Linearity Correction Flag	0 1	DISABLED ENABLED	U
528	16	TC_LIN_CORR_TBL	Nadir Total Column Linearity Correction Table ID	N/A	N/A	U
544	16	TC_FIXED_COADDS	Nadir Total Column Fixed Coadd Count	N/A	N/A	U
560	8	TC_REORDER_IMG	Nadir Total Column Reorder Image Flag	0 1	DISABLED ENABLED	U
568	8	TC_GAIN_CORR	Nadir Total Column Gain Correction Flag	0 1	DISABLED ENABLED	U
576	16	TC_GAIN_CORR_TBL	Nadir Total Column Gain Correction Table ID	N/A	N/A	U
592	8	TC_BIN_IMG	Nadir Total Column Bin Image Flag	0 1	DISABLED ENABLED	U
600	16	TC_SAMP_TBL	Nadir Total Column Sample Table ID	N/A	N/A	U
616	8	NP_LIN_CORR	Nadir Profiler Linearity Correction Flag	0 1	DISABLED ENABLED	U
624	16	NP_LIN_CORR_TBL	Nadir Profiler Linearity Correction Table ID	N/A	N/A	U
640	16	NP_FIXED_COADDS	Nadir Profiler Fixed Coadd Count	N/A	N/A	U
656	8	NP_REORDER_IMG	Nadir Profilier Reorder Image Flag	0 1	DISABLED ENABLED	U
664	8	NP_GAIN_CORR	Nadir Profilier Gain Correction Flag	0 1	DISABLED ENABLED	U
672	16	NP_GAIN_CORR_TBL	Nadir Profilier Gain Correction Table ID	N/A	N/A	U
688	8	NP_BIN_IMG	Nadir Profilier Bin Image Flag	0 1	DISABLED ENABLED	U
696	16	NP_SAMP_TBL	Nadir Profilier Sample Table ID -- major version	N/A	N/A	U
712	8	TC_GAIN_TBL_VER	Nadir Total Column Gain Table Version -- major version	N/A	N/A	U
720	8	TC_GAIN_TBL_VER	Nadir Total Column Gain Table Version -- minor version	N/A	N/A	U
728	8	NP_GAIN_TBL_VER	Nadir Profiler Gain Table Version -- major version	N/A	N/A	U
736	8	NP_GAIN_TBL_VER	Nadir Profiler Gain Table Version -- minor version	N/A	N/A	U
744	8	TC_LIN_TBL_VER	Nadir Total Column Linearity Table Version -- major version	N/A	N/A	U
752	8	TC_LIN_TBL_VER	Nadir Total Column Linearity Table Version -- minor version	N/A	N/A	U
760	8	NP_LIN_TBL_VER	Nadir Profiler Linearity Table Version -- major version	N/A	N/A	U
768	8	NP_LIN_TBL_VER	Nadir Profiler Linearity Table Version -- minor version	N/A	N/A	U
776	8	TC_SAMP_TBL_VER	Nadir Total Column Sample Table Version -- major version	N/A	N/A	U
784	8	TC_SAMP_TBL_VER	Nadir Total Column Sample Table Version -- minor version	N/A	N/A	U
792	8	NP_SAMP_TBL_VER	Nadir Profiler Sample Table Version -- major version	N/A	N/A	U
800	8	NP_SAMP_TBL_VER	Nadir Profiler Sample Table Version -- minor version	N/A	N/A	U

Start Bit	Bit Size	Mnemonic Name	Description	Units OR State Value	Conversion Coefficients (formula or C5,C4,C3,C2,C1,C0) OR State Name	Data Type
808	16	TC_ROWS	Rows of Nadir Total Column CCD data	N/A	N/A	U
824	16	TC_COLS	Columns of Nadir Total Column CCD data	N/A	N/A	U
840	16	TC_LAST_IMG_DOY	Time stamp of last good TC image (day of year)	N/A	N/A	U
856	32	TC_LAST_IMG_MSEC	Time stamp of last good TC image	milliseconds	N/A	U
888	16	TC_LAST_IMG_USEC	Time stamp of last good TC image	microseconds	N/A	U
904	16	M_I_CAL_LED	Current in the active Calibration LED	milliamps	-, -, -, -, 0.006125, 0	S
920	16	M_T_MTR_DRV_BD	Temperature - Motor Driver Board	Celsius	-, -, -, -, 0.0486, -273.15	S
936	16	N_T_TELESCOPE	Temperature - Nadir Telescope	Celsius	-32768 to 83: -, -, -8.469E-5, 0.02033, -1.99, 128.8 84 to 343: -, -, -1.465E-6, 0.001323, -0.4741, 86.11 344 to 1795: -, -, -1.044E-8, 4.681E-5, -0.08272, 43.02 1796 to 32767: -, -, -9.53E-11, 1.817E-6, -0.01566, 7.7	S
952	16	TC_T_CCD	Temperature - Nadir Total Column CCD	Celsius	-, -, -, -, -0.0238, 58.05	S
968	16	NP_T_CCD	Temperature - Nadir Profiler CCD	Celsius	-, -, -, -, -0.0238, 58.05	S
984	16	M_V_MTR_RES_5V	Voltage - Motor/Resolver Electronics +5V	Volts	-, -, -, -, 0.000949, 0	S
1000	16	M_V_RES_12V	Voltage - Resolver Electronics +12V	Volts	-, -, -, -, 0.00311, 0	S
1016	16	M_V_RES_M12V	Voltage - Resolver Electronics -12V	Volts	-, -, -, -, 0.00311, 0	S
1032	16	N_T_MOTOR	Temperature - Nadir Diffuser Motor	Celsius	-32768 to 83: -, -, -8.469E-5, 0.02033, -1.99, 128.8 84 to 343: -, -, -1.465E-6, 0.001323, -0.4741, 86.11 344 to 1795: -, -, -1.044E-8, 4.681E-5, -0.08272, 43.02 1796 to 32767: -, -, -9.53E-11, 1.817E-6, -0.01566, 7.7	S
1048	16	N_T_HOUSING	Temperature - Nadir Calibration Housing	Celsius	-32768 to 83: -, -, -8.469E-5, 0.02033, -1.99, 128.8 84 to 343: -, -, -1.465E-6, 0.001323, -0.4741, 86.11 344 to 1795: -, -, -1.044E-8, 4.681E-5, -0.08272, 43.02 1796 to 32767: -, -, -9.53E-11, 1.817E-6, -0.01566, 7.7	S
1064	16	N_T_SUN_SIDE	Temperature - Nadir Sun Side	Celsius	-32768 to 83: -, -, -8.469E-5, 0.02033, -1.99, 128.8 84 to 343: -, -, -1.465E-6, 0.001323, -0.4741, 86.11 344 to 1795: -, -, -1.044E-8, 4.681E-5, -0.08272, 43.02 1796 to 32767: -, -, -9.53E-11, 1.817E-6, -0.01566, 7.7	S
1080	16	N_T_DARK_SIDE	Temperature - Nadir Dark Side	Celsius	-32768 to 83: -, -, -8.469E-5, 0.02033, -1.99, 128.8 84 to 343: -, -, -1.465E-6, 0.001323, -0.4741, 86.11 344 to 1795: -, -, -1.044E-8, 4.681E-5, -0.08272, 43.02 1796 to 32767: -, -, -9.53E-11, 1.817E-6, -0.01566, 7.7	S
1096	16	TC_T_COND_BAR	Temperature - TC Conductor Bar	Celsius	-32768 to 83: -, -, -8.469E-5, 0.02033, -1.99, 128.8 84 to 343: -, -, -1.465E-6, 0.001323, -0.4741, 86.11 344 to 1795: -, -, -1.044E-8, 4.681E-5, -0.08272, 43.02 1796 to 32767: -, -, -9.53E-11, 1.817E-6, -0.01566, 7.7	S
1112	16	NP_T_COND_BAR	Temperature - NP Conductor Bar	Celsius	-32768 to 83: -, -, -8.469E-5, 0.02033, -1.99, 128.8 84 to 343: -, -, -1.465E-6, 0.001323, -0.4741, 86.11 344 to 1795: -, -, -1.044E-8, 4.681E-5, -0.08272, 43.02 1796 to 32767: -, -, -9.53E-11, 1.817E-6, -0.01566, 7.7	S
1128	16	TC_P_HTR_SET	Power Setpoint - TC Window Heater	Watts	-, -, -, 5.76E-8, 0, 0	
1144	16	NP_P_HTR_SET	Power Setpoint - NP Window Heater	Watts	-, -, -, 5.76E-8, 0, 0	S
1160	16	N_T_SIG_BD	Temperature - Nadir Signal Board	Celsius	-, -, -, -, 0.1233, -273.15	S
1176	16	N_T_TIM_BD	Temperature - Nadir Timing Board	Celsius	-, -, -, -, 0.0486, -273.15	S
1192	16	TC_T_HOUSING	Temperature - TC Housing.	Celsius	-32768 to 83: -, -, -8.469E-5, 0.02033, -1.99, 128.8 84 to 343: -, -, -1.465E-6, 0.001323, -0.4741, 86.11 344 to 1795: -, -, -1.044E-8, 4.681E-5, -0.08272, 43.02 1796 to 32767: -, -, -9.53E-11, 1.817E-6, -0.01566, 7.7	S
1208	16	NP_T_WINDOW	Temperature - NP Window	Celsius	-, -, -, -, 0.0483, -273.15	S
1224	16	TC_T_WINDOW	Temperature - TC Window	Celsius	-, -, -, -, 0.0483, -273.15	S
1240	32	N/A	HW Start Tag (if image is not sampled)	N/A	N/A	U
varies	varies	N/A	CCD Data (# pixels x 32 bits/pixel)	N/A	N/A	U
varies	32	N/A	HW End Tag (if image is not sampled)	N/A	N/A	U
varies	8	N/A	Pad Byte	N/A	N/A	U

4.3.4.1.7 Nadir Profiler Calibration

The OMPS produces Nadir Profiler collects its nominal calibration data in APID 565. Solar, linearity and dark current calibrations are performed in a single orbit every week. Because the solar, linearity and dark current calibrations require different image sizes, the structure of APID 565 is illustrated as a variable-sized grouped packet in Figure 4.3-21, Figure 4.3-22, Figure 4.3-23 and Figure 4.3-24. It is possible but not expected for APID 565 to be a single standalone packet. The maximum size of a packet with a single image is included in the footnotes to Table 4.3-1. Since a maximum-sized packet will span multiple grouped packets, the first packet of a continuation grouped packet is shown in Figure 4.3-24. The user data fields are listed in Table 4.3-9 assuming there is a single grouped packet.

FIRST PACKET, first group

	PACKET PRIMARY HEADER							SECONDARY HEADER			User Data Field						
	Verson No.	Packet Identification			Packet Sequence		Packet Length	Start of Scan	Packets in RDR - 1	Spare	OMPS Header			Engineering Data	Science		
		Type Indicator	Sec Hdr Flag	APID	Sequence Flags	Sequence Count					RDR Version	Cont Count -1	Cont Flag	Engineering Data Sections	HW Start Tag (if not sampled)	CCD data (start)	
Bits	3	1	1	11	2	14	16	64	8	8	16	8	8	1208	32	varies	TOTAL 8192
Octets	2				2		2	8	1	1	2	1	1	151	4	varies	1024
Value	000	0	1	0x235	01	varies	0x03F9	varies	varies	0x00	varies	varies	varies	varies	varies	varies	

Telemetry Packet

Secondary Header Present

Engineering Data

Sensor_Info (7)	Mech_SD (59)	Mech_Nadir (62)	Mech_Nadir_SD (73)	Nadir_SD (71)	Nadir_IMG_Profile_SD (50)	Nadir_TP_SD (68)	Curr_LED_SD (26)	Temp_Mech_SD (30)	Temp_Nadir_SD (28)	Volt_Mech_SD (42)	Temp_Nadir (24)	Temp_NP (36)	Temp_TC (35)
64	112	88	88	64	360	96	16	16	48	48	176	16	16
8	14	11	11	8	45	12	2	2	6	6	22	2	2
varies	varies	varies	varies	varies	varies	zeros	varies	varies	varies	varies	varies	varies	varies

Figure 4.3-21. OMPS First Grouped Nadir Profiler Calibration First Packet Format

MIDDLE PACKET

	PACKET PRIMARY HEADER							User Data Field	
	Verson No.	Packet Identification			Packet Sequence		Packet Length	Science	
		Type Indicator	Sec Hdr Flag	APID	Sequence Flags	Sequence Count		CCD data (middle)	TOTAL
Bits	3	1	1	11	2	14	16	8144	8192
Octets	2				2		2	1018	1024
Value	000	0	0	0x235	00	varies	0x03F9	varies	

Telemetry Packet

Middle Packet

Figure 4.3-22. OMPS Grouped Nadir Profiler Calibration Middle Packet Format

LAST PACKET

	PACKET PRIMARY HEADER							User Data Field			
	Verson No.	Packet Identification			Packet Sequence		Packet Length	Science			
		Type Indicator	Sec Hdr Flag	APID	Sequence Flags	Sequence Count		CCD data (end)	HW End Tag (if not sampled)	Pad Byte (if necessary)	TOTAL
Bits	3	1	1	11	2	14	16	varies	32	8	varies
Octets	2				2		2	varies	4	1	varies
Value	000	0	0	0x235	10	varies	varies	varies	varies	fixed	

Telemetry Packet

Last Packet

Figure 4.3-23. OMPS Grouped Nadir Profiler Calibration Last Packet Format

Check the JPSS MIS Server at https://jpssmis.gsfc.nasa.gov/frontmenu_dsp.cfm to verify that this is the correct version prior to use.

FIRST PACKET of a group, but not of the fi:

	PACKET PRIMARY HEADER							SECONDARY HEADER			User Data Field				
	Verson No.	Packet Identification			Packet Sequence		Packet Length	Start of Scan	Packets in RDR - 1	Spare	OMPS Header			Science	
		Type Indicator	Sec Hdr Flag	APID	Sequence Flags	Sequence Count					RDR Version	Cont Count -1	Cont Flag	CCD data (middle)	TOTAL
Bits	3	1	1	11	2	14	16	64	8	8	16	8	8	8032	8192
Octets	2				2		2	8	1	1	2	1	1	1004	1024
Value	000	0	1	0x235	01	varies	0x03F9	varies	varies	0x0	varies	varies	varies	varies	

Telemetry Packet

Secondary Header Present

Figure 4.3-24. OMPS Grouped Nadir Profiler Calibration First Packet Format

Table 4.3-9. OMPS Nadir Profiler Calibration Packet User Data Fields

Start Bit	Bit Size	Mnemonic Name	Description	Units OR State Value	Conversion Coefficients (formula or C5,C4,C3,C2,C1,C0) OR State Name	Data Type
0	16	CCSDS_RDR_VER	Version Number of RDR	N/A	N/A	U
16	8	CCSDS_CONT_COUNT	Number of segmented CCSDS packet sequences - 1	N/A	N/A	U
24	8	CCSDS_CONT_FLAG	Indicates if this CCSDS packet begins an RDR	N/A	N/A	U
32	8	SENSOR_ID	OMPS Sensor Identification (not for Dwell or FSW Bootup status)	N/A	N/A	U
40	8	FSW_VERSION	Flight Software Version Number (not for Dwell or FSW Bootup status) -- major version	N/A	N/A	U
48	8	FSW_VERSION	Flight Software Version Number (not for Dwell or FSW Bootup status) -- minor version	N/A	N/A	U
56	2	MEB_BOOT_IMG_ID	Boot Image Identifier (not for Dwell or FSW Bootup status)	0 1 2	Not Used As-Launched Modifiable	U
58	5	MEB_SBC_ID	Single Board Computer Identifier (not for Dwell or FSW Bootup status)	N/A	N/A	U
63	1	MEB_SIDE	Active MEB Side (not for Dwell or FSW Bootup status)	0 1	MEB2 MEB1	U
64	8	FSW_INIT_STATUS	Flight Software Initialization Status (not for Dwell or FSW Bootup status)	0 -1	OK ERROR	S
72	8	FSW_INIT_CODE	Flight Software Initialization Code (not for Dwell or FSW Bootup status)	N/A	N/A	U
80	8	FSW_PROTECTED	OMPS Protected State Indicator (not for Dwell or FSW Bootup status)	1 0	PROTECTED UNPROTECTED	U
88	4	MEB_FLASH_PWR	SBC Flash Memory Power State (not for Dwell or FSW Bootup status)	0 1	OFF ON	U
92	4	EEPROM_SIDE	EEPROM side used to boot	0 1	Boot Side 1 Boot Side 2	U
96	7	M_MCR_SPARE6	Unused bits of the Miscellaneous Control Register	N/A	N/A	U
103	1	M_MCR_L_SP_CTRL	Limb Signal Processing Spare Control	0 1	OFF ON	U
104	3	M_MCR_SPARE5	Unused bits of the Miscellaneous Control Register	N/A	N/A	U
107	1	M_MCR_N_SP_CTRL	Nadir Signal Processing Spare Control	0 1	OFF ON	U
108	3	M_MCR_SPARE4	Unused bits of the Miscellaneous Control Register	N/A	N/A	U
111	1	M_MCR_TEST_2	Test connector	0 1	OFF ON	U
112	7	M_MCR_SPARE3	Unused bits of the Miscellaneous Control Register	N/A	N/A	U
119	9	M_CAL_LED_STATE	State of the Calibration LEDs	0 257 272 273	ALL_OFF NADIR_TC_ON NADIR_NP_ON LIMB_ON	U
128	7	M_THCR_SPARE7	Unused bits of the TEC & Heater Control & Status Register	N/A	N/A	U
135	1	M_THCR_DAC_BUSY	State of the DACBUSY line	0 1	NOT_BUSY BUSY	U
136	3	M_THCR_SPARE6	Unused bits of the TEC & Heater Control & Status Register	N/A	N/A	U
139	1	M_TC_TEC_STATE	State of the TC TEC Control	0 1	OFF ON	U
140	3	M_THCR_SPARE5	Unused bits of the TEC & Heater Control & Status Register	N/A	N/A	U
143	1	M_NP_TEC_STATE	State of the NP TEC Control	0 1	OFF ON	U
144	3	M_THCR_SPARE4	Unused bits of the TEC & Heater Control & Status Register	N/A	N/A	U
147	1	M_LP_TEC_STATE	State of the LP TEC Control	0 1	OFF ON	U
148	3	M_THCR_SPARE3	Unused bits of the TEC & Heater Control & Status Register	N/A	N/A	U
151	1	M_TC_HTR_STATE	State of the TC CCD Window Heater Control	0 1	OFF ON	U

Check the JPSS MIS Server at https://jpssmis.gsfc.nasa.gov/frontmenu_dsp.cfm to verify that this is the correct version prior to use.

Start Bit	Bit Size	Mnemonic Name	Description	Units OR State Value	Conversion Coefficients (formula or C5,C4,C3,C2,C1,C0) OR State Name	Data Type
152	3	M_THCR_SPARE2	Unused bits of the TEC & Heater Control & Status Register	N/A	N/A	U
155	1	M_NP_HTR_STATE	State of the NP CCD Window Heater Control	0 1	OFF ON	U
156	3	M_THCR_SPARE1	Unused bits of the TEC & Heater Control & Status Register	N/A	N/A	U
159	1	M_LP_HTR_STATE	State of the LP CCD Window Heater Control	0 1	OFF ON	U
160	1	MEB_LP_HTR_PWR	LP Window Heater Power State	0 1	PWR_ENABLED PWR_DISABLED	U
161	1	MEB_NP_HTR_PWR	NP Window Heater Power State	0 1	PWR_ENABLED PWR_DISABLED	U
162	1	MEB_TC_HTR_PWR	TC Window Heater Power State	0 1	PWR_ENABLED PWR_DISABLED	U
163	1	MEB_LP_TEC_PWR	LP TEC Power State	0 1	PWR_ENABLED PWR_DISABLED	U
164	1	MEB_NP_TEC_PWR	NP TEC Power State	0 1	PWR_ENABLED PWR_DISABLED	U
165	1	MEB_TC_TEC_PWR	TC TEC Power State	0 1	PWR_ENABLED PWR_DISABLED	U
166	1	MEB_L_MTR_RELAY	Limb Motor Relay Position	0 1	CLOSED OPEN	U
167	1	MEB_N_MTR_RELAY	Nadir Motor Relay Position	0 1	CLOSED OPEN	U
168	1	MEB_L_PWR	Limb Power Supply State	0 1	PWR_ENABLED PWR_DISABLED	U
169	1	MEB_N_PWR	Nadir Power Supply State	0 1	PWR_ENABLED PWR_DISABLED	U
170	1	MEB_BOOT_SEL_1	Boot Select Bit 1 Relay Position	0 1	CLOSED OPEN	U
171	1	MEB_BOOT_SEL_0	Boot Select Bit 0 Relay Position	0 1	CLOSED OPEN	U
172	1	MEB_L_CLKDRV_RED	Limb Clock Drive Relay Redundant Position	0 1	ALL_REDUNDANT NOT_REDUNDANT	U
173	1	MEB_L_CLKDRV_PRI	Limb Clock Drive Relay Primary Position	0 1	ALL_PRIMARY NOT_PRIMARY	U
174	1	MEB_N_CLKDRV_RED	Nadir Clock Drive Relay Redundant Position	0 1	ALL_REDUNDANT NOT_REDUNDANT	U
175	1	MEB_N_CLKDRV_PRI	Nadir Clock Drive Relay Primary Position	0 1	ALL_PRIMARY NOT_PRIMARY	U
176	10	M_MCSR_SPARE6	Unused register bits	0 1	OPEN CLOSED	U
186	1	M_L_XMEB_RELAY	Position of Non-Operating MEB Limb Motor Relay	0 1	CLOSED OPEN	U
187	1	M_N_XMEB_RELAY	Position of Non-Operating MEB Nadir Motor Relay	0 1	CLOSED OPEN	U
188	3	M_MCSR_SPARE5	Unused register bits	0 1	OPEN CLOSED	U
191	1	M_MTR_ACTIVE	Motor Control Circuitry Active	0 1	INACTIVE ACTIVE	U
192	3	M_MCSR_SPARE4	Unused register bits	0 1	OPEN CLOSED	U
195	1	M_RELAY_POS	Relay Position	0 1	OPEN CLOSED	U
196	3	M_MCSR_SPARE3	Unused register bits	0 1	OPEN CLOSED	U
199	1	M_MTR_SELECT	Motor Select	0 1	NADIR LIMB	U

Start Bit	Bit Size	Mnemonic Name	Description	Units OR State Value	Conversion Coefficients (formula or C5,C4,C3,C2,C1,C0) OR State Name	Data Type
200	3	M_MCSR_SPARE2	Unused register bits	0 1	OPEN CLOSED	U
203	1	M_RES_ENABLE	Resolver Circuitry Enable	0 1	DISABLED ENABLED	U
204	3	M_MCSR_SPARE1	Unused register bits	0 1	OPEN CLOSED	U
207	1	M_MTR_RES_PWR	Motor and Resolver Power State	0 1	OFF ON	U
208	1	M_N_RESOLV_BUSY	Nadir Resolver Data Register - Busy	0 1	NOT_BUSY BUSY	U
209	15	M_N_RESOLV_SPARE	Nadir Resolver Data Register - Unused Bits	N/A	N/A	U
224	16	M_N_RESOLV_DATA	Nadir Resolver Data Register - Resolver Data	N/A	N/A	U
240	7	M_NMP_SPARE4	Nadir Motor Parameter Register - Unused Bits	0 1	CW CCW	U
247	1	M_N_DIRECTION	Nadir Motor Direction	0 1	CW CCW	U
248	2	M_NMP_SPARE3	Nadir Motor Parameter Register - Unused Bits	0 1	CW CCW	U
250	2	M_N_SPEED	Nadir Motor Speed	0 1 2 3	STEPS_SEC_300 STEPS_SEC_200 STEPS_SEC_100 STEPS_SEC_10	U
252	2	M_NMP_SPARE2	Nadir Motor Parameter Register - Unused Bits	0 1	CW CCW	U
254	2	M_N_PHASE	Nadir Motor Phase	0 1 2 3	INVALID A_MINUS_B_PLUS A_MINUS_B_MINUS A_PLUS_B_MINUS	U
256	4	M_NMP_SPARE1	Nadir Motor Parameter Register - Unused Bits	0 1	CW CCW	U
260	12	M_N_STEP_COUNT	Nadir Motor Step Count	N/A	N/A	U
272	8	M_N_RETRIES	Nadir Motor Retries	N/A	N/A	U
280	16	M_N_DESTINATION	Nadir Diffuser Move Destination	N/A	N/A	U
296	16	M_TC_TEC_SETPT	Commanded TC TEC Setpoint	N/A	N/A	U
312	16	M_TC_HTR_SETPT	Commanded TC CCD Window Heater Setpoint	N/A	N/A	U
328	16	M_NP_TEC_SETPT	Commanded NP TEC Setpoint	N/A	N/A	U
344	16	M_NP_HTR_SETPT	Commanded NP CCD Window Heater Setpoint	N/A	N/A	U
360	16	M_N_POSITION	Nadir Diffuser Motor Position	N/A	N/A	U
376	8	M_N_POS_ID	Nadir Diffuser Position ID	N/A	N/A	U
384	8	N_TIM_PAT_VER	Nadir Active Timing Pattern Table Version Number -- major version	N/A	N/A	U
392	8	N_TIM_PAT_VER	Nadir Active Timing Pattern Table Version Number -- minor version	N/A	N/A	U
400	16	N_IMG_STATUS	Nadir Image Processing Status	N/A	N/A	U
416	32	N_INT_HOLD_TIME	Nadir TPG Integration Hold Time	milliseconds	-, -, -, -, 0.1, 0	U

Start Bit	Bit Size	Mnemonic Name	Description	Units OR State Value	Conversion Coefficients (formula or C5,C4,C3,C2,C1,C0) OR State Name	Data Type
448	8	N_PROFILE_ID	Active Nadir Profile ID	N/A	N/A	U
456	8	N_PROFILE_VER	Nadir Imaging Profile Table Version Number -- major version	N/A	N/A	U
464	8	N_PROFILE_VER	Nadir Imaging Profile Table Version Number -- minor version	N/A	N/A	U
472	16	N_TIM_PAT_TBL	Nadir Timing Pattern Table ID	N/A	N/A	U
488	16	TC_APID	Nadir Total Column Application ID	N/A	N/A	U
504	16	NP_APID	Nadir Profiler Application ID	N/A	N/A	U
520	8	TC_LIN_CORR	Nadir Total Column Linearity Correction Flag	0 1	DISABLED ENABLED	U
528	16	TC_LIN_CORR_TBL	Nadir Total Column Linearity Correction Table ID	N/A	N/A	U
544	16	TC_FIXED_COADDS	Nadir Total Column Fixed Coadd Count	N/A	N/A	U
560	8	TC_REORDER_IMG	Nadir Total Column Reorder Image Flag	0 1	DISABLED ENABLED	U
568	8	TC_GAIN_CORR	Nadir Total Column Gain Correction Flag	0 1	DISABLED ENABLED	U
576	16	TC_GAIN_CORR_TBL	Nadir Total Column Gain Correction Table ID	N/A	N/A	U
592	8	TC_BIN_IMG	Nadir Total Column Bin Image Flag	0 1	DISABLED ENABLED	U
600	16	TC_SAMP_TBL	Nadir Total Column Sample Table ID	N/A	N/A	U
616	8	NP_LIN_CORR	Nadir Profiler Linearity Correction Flag	0 1	DISABLED ENABLED	U
624	16	NP_LIN_CORR_TBL	Nadir Profiler Linearity Correction Table ID	N/A	N/A	U
640	16	NP_FIXED_COADDS	Nadir Profiler Fixed Coadd Count	N/A	N/A	U
656	8	NP_REORDER_IMG	Nadir Profilier Reorder Image Flag	0 1	DISABLED ENABLED	U
664	8	NP_GAIN_CORR	Nadir Profilier Gain Correction Flag	0 1	DISABLED ENABLED	U
672	16	NP_GAIN_CORR_TBL	Nadir Profilier Gain Correction Table ID	N/A	N/A	U
688	8	NP_BIN_IMG	Nadir Profilier Bin Image Flag	0 1	DISABLED ENABLED	U
696	16	NP_SAMP_TBL	Nadir Profilier Sample Table ID	N/A	N/A	U
712	8	TC_GAIN_TBL_VER	Nadir Total Column Gain Table Version -- major version	N/A	N/A	U
720	8	TC_GAIN_TBL_VER	Nadir Total Column Gain Table Version -- major version	N/A	N/A	U
728	8	NP_GAIN_TBL_VER	Nadir Profiler Gain Table Version -- major version	N/A	N/A	U
736	8	NP_GAIN_TBL_VER	Nadir Profiler Gain Table Version -- major version	N/A	N/A	U
744	8	TC_LIN_TBL_VER	Nadir Total Column Linearity Table Version -- major version	N/A	N/A	U
752	8	TC_LIN_TBL_VER	Nadir Total Column Linearity Table Version -- major version	N/A	N/A	U
760	8	NP_LIN_TBL_VER	Nadir Profiler Linearity Table Version -- major version	N/A	N/A	U
768	8	NP_LIN_TBL_VER	Nadir Profiler Linearity Table Version -- major version	N/A	N/A	U
776	8	TC_SAMP_TBL_VER	Nadir Total Column Sample Table Version -- major version	N/A	N/A	U
784	8	TC_SAMP_TBL_VER	Nadir Total Column Sample Table Version -- major version	N/A	N/A	U
792	8	NP_SAMP_TBL_VER	Nadir Profiler Sample Table Version -- major version	N/A	N/A	U
800	8	NP_SAMP_TBL_VER	Nadir Profiler Sample Table Version -- major version	N/A	N/A	U

Start Bit	Bit Size	Mnemonic Name	Description	Units OR State Value	Conversion Coefficients (formula or C5,C4,C3,C2,C1,C0) OR State Name	Data Type
808	16	NP_ROWS	Rows of Nadir Total Column CCD data	N/A	N/A	U
824	16	NP_COLS	Columns of Nadir Total Column CCD data	N/A	N/A	U
840	16	NP_LAST_IMG_DOY	Time stamp of last good TC image (day of year)	N/A	N/A	U
856	32	NP_LAST_IMG_MSEC	Time stamp of last good TC image	milliseconds	N/A	U
888	16	NP_LAST_IMG_USEC	Time stamp of last good TC image	microseconds	N/A	U
904	16	M_I_CAL_LED	Current in the active Calibration LED	milliamps	-, -, -, -, 0.006125, 0	S
920	16	M_T_MTR_DRV_BD	Temperature - Motor Driver Board	Celsius	-, -, -, -, 0.0486, -273.15	S
936	16	N_T_TELESCOPE	Temperature - Nadir Telescope	Celsius	-32768 to 83: -, -, -8.469E-5, 0.02033, -1.99, 128.8 84 to 343: -, -, -1.465E-6, 0.001323, -0.4741, 86.11 344 to 1795: -, -, -1.044E-8, 4.681E-5, -0.08272, 43.02 1796 to 32767: -, -, -9.53E-11, 1.817E-6, -0.01566, 7.7	S
952	16	TC_T_CCD	Temperature - Nadir Total Column CCD	Celsius	-, -, -, -, -0.0238, 58.05	S
968	16	NP_T_CCD	Temperature - Nadir Profiler CCD	Celsius	-, -, -, -, -0.0238, 58.05	S
984	16	M_V_MTR_RES_5V	Voltage - Motor/Resolver Electronics +5V	Volts	-, -, -, -, 0.000949, 0	S
1000	16	M_V_RES_12V	Voltage - Resolver Electronics +12V	Volts	-, -, -, -, 0.00311, 0	S
1016	16	M_V_RES_M12V	Voltage - Resolver Electronics -12V	Volts	-, -, -, -, 0.00311, 0	S
1032	16	N_T_MOTOR	Temperature - Nadir Diffuser Motor	Celsius	-32768 to 83: -, -, -8.469E-5, 0.02033, -1.99, 128.8 84 to 343: -, -, -1.465E-6, 0.001323, -0.4741, 86.11 344 to 1795: -, -, -1.044E-8, 4.681E-5, -0.08272, 43.02 1796 to 32767: -, -, -9.53E-11, 1.817E-6, -0.01566, 7.7	S
1048	16	N_T_HOUSING	Temperature - Nadir Calibration Housing	Celsius	-32768 to 83: -, -, -8.469E-5, 0.02033, -1.99, 128.8 84 to 343: -, -, -1.465E-6, 0.001323, -0.4741, 86.11 344 to 1795: -, -, -1.044E-8, 4.681E-5, -0.08272, 43.02 1796 to 32767: -, -, -9.53E-11, 1.817E-6, -0.01566, 7.7	S
1064	16	N_T_SUN_SIDE	Temperature - Nadir Sun Side	Celsius	-32768 to 83: -, -, -8.469E-5, 0.02033, -1.99, 128.8 84 to 343: -, -, -1.465E-6, 0.001323, -0.4741, 86.11 344 to 1795: -, -, -1.044E-8, 4.681E-5, -0.08272, 43.02 1796 to 32767: -, -, -9.53E-11, 1.817E-6, -0.01566, 7.7	S
1080	16	N_T_DARK_SIDE	Temperature - Nadir Dark Side	Celsius	-32768 to 83: -, -, -8.469E-5, 0.02033, -1.99, 128.8 84 to 343: -, -, -1.465E-6, 0.001323, -0.4741, 86.11 344 to 1795: -, -, -1.044E-8, 4.681E-5, -0.08272, 43.02 1796 to 32767: -, -, -9.53E-11, 1.817E-6, -0.01566, 7.7	S
1096	16	TC_T_COND_BAR	Temperature - TC Conductor Bar	Celsius	-32768 to 83: -, -, -8.469E-5, 0.02033, -1.99, 128.8 84 to 343: -, -, -1.465E-6, 0.001323, -0.4741, 86.11 344 to 1795: -, -, -1.044E-8, 4.681E-5, -0.08272, 43.02 1796 to 32767: -, -, -9.53E-11, 1.817E-6, -0.01566, 7.7	S
1112	16	NP_T_COND_BAR	Temperature - NP Conductor Bar	Celsius	-32768 to 83: -, -, -8.469E-5, 0.02033, -1.99, 128.8 84 to 343: -, -, -1.465E-6, 0.001323, -0.4741, 86.11 344 to 1795: -, -, -1.044E-8, 4.681E-5, -0.08272, 43.02 1796 to 32767: -, -, -9.53E-11, 1.817E-6, -0.01566, 7.7	S
1128	16	TC_P_HTR_SET	Power Setpoint - TC Window Heater	Watts	-, -, -, 5.76E-8, 0, 0	
1144	16	NP_P_HTR_SET	Power Setpoint - NP Window Heater	Watts	-, -, -, 5.76E-8, 0, 0	S
1160	16	N_T_SIG_BD	Temperature - Nadir Signal Board	Celsius	-, -, -, -, 0.1233, -273.15	S
1176	16	N_T_TIM_BD	Temperature - Nadir Timing Board	Celsius	-, -, -, -, 0.0486, -273.15	S
1192	16	TC_T_HOUSING	Temperature - TC Housing.	Celsius	-32768 to 83: -, -, -8.469E-5, 0.02033, -1.99, 128.8 84 to 343: -, -, -1.465E-6, 0.001323, -0.4741, 86.11 344 to 1795: -, -, -1.044E-8, 4.681E-5, -0.08272, 43.02 1796 to 32767: -, -, -9.53E-11, 1.817E-6, -0.01566, 7.7	S
1208	16	NP_T_WINDOW	Temperature - NP Window	Celsius	-, -, -, -, 0.0483, -273.15	S
1224	16	TC_T_WINDOW	Temperature - TC Window	Celsius	-, -, -, -, 0.0483, -273.15	S
1240	32	N/A	HW Start Tag (if image is not sampled)	N/A	N/A	U
varies	varies	N/A	CCD Data (# pixels x 32 bits/pixel)	N/A	N/A	U
varies	32	N/A	HW End Tag (if image is not sampled)	N/A	N/A	U
varies	8	N/A	Pad Byte	N/A	N/A	U

4.3.4.1.8 Limb Profiler Calibration

The OMPS Limb Profiler collects its nominal calibration data in APID 566. Solar, linearity and dark current calibrations are performed in a single orbit every week. Because the solar, linearity and dark current calibrations require different image sizes, the structure of APID 566 is illustrated as variable in size in Figure 4.3-25, Figure 4.3-26, Figure 4.3-27 and Figure 4.3-28. The maximum size of a packet with a single image is included in the footnotes to Table 4.3-1. Since a maximum-sized packet will span multiple grouped packets, the first packet of a continuation grouped packet is shown in Figure 4.3-28. The user data fields are listed in Table 4.3-10 assuming there is a single grouped packet.

FIRST PACKET, first group

	PACKET PRIMARY HEADER							SECONDARY HEADER			User Data Field						
	Verson No.	Packet Identification			Packet Sequence		Packet Length	Start of Scan	Packets in RDR - 1	Spare	OMPS Header			Engineering Data	Science		
		Type Indicator	Sec Hdr Flag	APID	Sequence Flags	Sequence Count					RDR Version	Cont Count -1	Cont Flag	Engineering Data Sections	HW Start Tag (if not sampled)	CCD data (start)	TOTAL
Bits	3	1	1	11	2	14	16	64	8	8	16	8	8	1096	32	varies	8192
Octets	2				2		2	8	1	1	2	1	1	137	4	varies	1024
Value	000	0	1	0x236	01	varies	0x03F9	varies	varies	0x00	varies	varies	varies	varies	varies	varies	

Secondary Header Present

Telemetry Packet

Engineering Data												
Sensor_Info (7)	Mech_SD (59)	Mech_Limb (63)	Mech_Limb (72)	Limb_SD (65)	Limb_IMG_Profile_SD (51)	Limb_1st_SD (49)	Limb_2nd_SD (67)	Curr_LED_SD (26)	Temp_Mech_SD (30)	Temp_Limb_SD (29)	Volt_Mech_SD (42)	Temp_Limb (25)
64	112	88	56	96	264	64	64	16	16	64	48	144
8	14	11	7	12	33	8	8	2	2	8	6	18
varies	varies	varies	varies	varies	varies	varies	varies	varies	varies	varies	varies	varies

Figure 4.3-25. OMPS First Grouped Limb Calibration First Packet Format

MIDDLE PACKET

	PACKET PRIMARY HEADER							User Data Field	
	Verson No.	Packet Identification			Packet Sequence		Packet Length	Science	
		Type Indicator	Sec Hdr Flag	APID	Sequence Flags	Sequence Count		CCD data (middle)	TOTAL
Bits	3	1	1	11	2	14	16	8144	8192
Octets	2				2		2	1018	1024
Value	000	0	0	0x236	00	varies	0x03F9	varies	

Telemetry Packet

Middle Packet

Figure 4.3-26. OMPS Grouped Limb Calibration Middle Packet Format

LAST PACKET

	PACKET PRIMARY HEADER							User Data Field			
	Verson No.	Packet Identification			Packet Sequence		Packet Length	Science			
		Type Indicator	Sec Hdr Flag	APID	Sequence Flags	Sequence Count		CCD data (end)	HW End Tag (if not sampled)	Pad Byte (if necessary)	TOTAL
Bits	3	1	1	11	2	14	16	varies	32	8	varies
Octets	2				2		2	varies	4	1	varies
Value	000	0	0	0x236	10	varies	varies	varies	varies	fixed	

Telemetry Packet

Last Packet

Figure 4.3-27. OMPS Grouped Limb Calibration Last Packet Format

FIRST PACKET of a group, but not of the first group

	PACKET PRIMARY HEADER							SECONDARY HEADER			User Data Field				
	Verson No.	Packet Identification			Packet Sequence		Packet Length	Start of Scan	Packets in RDR - 1	Spare	OMPS Header			Science	
		Type Indicator	Sec Hdr Flag	APID	Sequence Flags	Sequence Count					RDR Version	Cont Count -1	Cont Flag	CCD data (middle)	TOTAL
Bits	3	1	1	11	2	14	16	64	8	8	16	8	8	8032	8192
Octets	2				2		2	8	1	1	2	1	1	1004	1024
Value	000	0	1	0x236	01	varies	0x03F9	varies	varies	0x0	varies	varies	varies	varies	

Telemetry Packet

Secondary Header

Figure 4.3-28. OMPS Grouped Limb Calibration First Packet Format

Check the JPSS MIS Server at https://jpssmis.gsfc.nasa.gov/frontmenu_dsp.cfm to verify that this is the correct version prior to use.

Table 4.3-10. OMPS Limb Calibration Packet User Data Fields

Start Bit	Bit Size	Mnemonic Name	Description	Units OR State Value	Conversion Coefficients (formula or C5,C4,C3,C2,C1,C0) OR State Name	Data Type
0	16	CCSDS_RDR_VER	Version Number of RDR	N/A	N/A	U
16	8	CCSDS_CONT_COUNT	Number of segmented CCSDS packet sequences - 1	N/A	N/A	U
24	8	CCSDS_CONT_FLAG	Indicates if this CCSDS packet begins an RDR	N/A	N/A	U
32	8	SENSOR_ID	OMPS Sensor Identification (not for Dwell or FSW Bootup status)	N/A	N/A	U
40	8	FSW_VERSION	Flight Software Version Number (not for Dwell or FSW Bootup status) -- major version	N/A	N/A	U
48	8	FSW_VERSION	Flight Software Version Number (not for Dwell or FSW Bootup status) -- minor version	N/A	N/A	U
56	2	MEB_BOOT_IMG_ID	Boot Image Identifier (not for Dwell or FSW Bootup status)	0 1 2	Not Used As-Launched Modifiable	U
58	5	MEB_SBC_ID	Single Board Computer Identifier (not for Dwell or FSW Bootup status)	N/A	N/A	U
63	1	MEB_SIDE	Active MEB Side (not for Dwell or FSW Bootup status)	0 1	MEB2 MEB1	U
64	8	FSW_INIT_STATUS	Flight Software Initialization Status (not for Dwell or FSW Bootup status)	0 -1	OK ERROR	S
72	8	FSW_INIT_CODE	Flight Software Initialization Code (not for Dwell or FSW Bootup status)	N/A	N/A	U
80	8	FSW_PROTECTED	OMPS Protected State Indicator (not for Dwell or FSW Bootup status)	1 0	PROTECTED UNPROTECTED	U
88	4	MEB_FLASH_PWR	SBC Flash Memory Power State (not for Dwell or FSW Bootup status)	0 1	OFF ON	U
92	4	EEPROM_SIDE	EEPROM side used to boot	0 1	Boot Side 1 Boot Side 2	U
96	7	M_MCR_SPARE6	Unused bits of the Miscellaneous Control Register	N/A	N/A	U
103	1	M_MCR_L_SP_CTRL	Limb Signal Processing Spare Control	0 1	OFF ON	U
104	3	M_MCR_SPARE5	Unused bits of the Miscellaneous Control Register	N/A	N/A	U
107	1	M_MCR_N_SP_CTRL	Nadir Signal Processing Spare Control	0 1	OFF ON	U
108	3	M_MCR_SPARE4	Unused bits of the Miscellaneous Control Register	N/A	N/A	U
111	1	M_MCR_TEST_2	Test connector	0 1	OFF ON	U
112	7	M_MCR_SPARE3	Unused bits of the Miscellaneous Control Register	N/A	N/A	U
119	9	M_CAL_LED_STATE	State of the Calibration LEDs	0 257 272 273	ALL_OFF NADIR_TC_ON NADIR_NP_ON LIMB_ON	U
128	7	M_THCR_SPARE7	Unused bits of the TEC & Heater Control & Status Register	N/A	N/A	U
135	1	M_THCR_DAC_BUSY	State of the DACBUSY line	0 1	NOT_BUSY BUSY	U
136	3	M_THCR_SPARE6	Unused bits of the TEC & Heater Control & Status Register	N/A	N/A	U
139	1	M_TC_TEC_STATE	State of the TC TEC Control	0 1	OFF ON	U
140	3	M_THCR_SPARE5	Unused bits of the TEC & Heater Control & Status Register	N/A	N/A	U
143	1	M_NP_TEC_STATE	State of the NP TEC Control	0 1	OFF ON	U
144	3	M_THCR_SPARE4	Unused bits of the TEC & Heater Control & Status Register	N/A	N/A	U
147	1	M_LP_TEC_STATE	State of the LP TEC Control	0 1	OFF ON	U
148	3	M_THCR_SPARE3	Unused bits of the TEC & Heater Control & Status Register	N/A	N/A	U
151	1	M_TC_HTR_STATE	State of the TC CCD Window Heater Control	0 1	OFF ON	U

Check the JPSS MIS Server at https://jpssmis.gsfc.nasa.gov/frontmenu_dsp.cfm to verify that this is the correct version prior to use.

Start Bit	Bit Size	Mnemonic Name	Description	Units OR State Value	Conversion Coefficients (formula or C5,C4,C3,C2,C1,C0) OR State Name	Data Type
152	3	M_THCR_SPARE2	Unused bits of the TEC & Heater Control & Status Register	N/A	N/A	U
155	1	M_NP_HTR_STATE	State of the NP CCD Window Heater Control	0 1	OFF ON	U
156	3	M_THCR_SPARE1	Unused bits of the TEC & Heater Control & Status Register	N/A	N/A	U
159	1	M_LP_HTR_STATE	State of the LP CCD Window Heater Control	0 1	OFF ON	U
160	1	MEB_LP_HTR_PWR	LP Window Heater Power State	0 1	PWR_ENABLED PWR_DISABLED	U
161	1	MEB_NP_HTR_PWR	NP Window Heater Power State	0 1	PWR_ENABLED PWR_DISABLED	U
162	1	MEB_TC_HTR_PWR	TC Window Heater Power State	0 1	PWR_ENABLED PWR_DISABLED	U
163	1	MEB_LP_TEC_PWR	LP TEC Power State	0 1	PWR_ENABLED PWR_DISABLED	U
164	1	MEB_NP_TEC_PWR	NP TEC Power State	0 1	PWR_ENABLED PWR_DISABLED	U
165	1	MEB_TC_TEC_PWR	TC TEC Power State	0 1	PWR_ENABLED PWR_DISABLED	U
166	1	MEB_L_MTR_RELAY	Limb Motor Relay Position	0 1	CLOSED OPEN	U
167	1	MEB_N_MTR_RELAY	Nadir Motor Relay Position	0 1	CLOSED OPEN	U
168	1	MEB_L_PWR	Limb Power Supply State	0 1	PWR_ENABLED PWR_DISABLED	U
169	1	MEB_N_PWR	Nadir Power Supply State	0 1	PWR_ENABLED PWR_DISABLED	U
170	1	MEB_BOOT_SEL_1	Boot Select Bit 1 Relay Position	0 1	CLOSED OPEN	U
171	1	MEB_BOOT_SEL_0	Boot Select Bit 0 Relay Position	0 1	CLOSED OPEN	U
172	1	MEB_L_CLKDRV_RED	Limb Clock Drive Relay Redundant Position	0 1	ALL_REDUNDANT NOT_REDUNDANT	U
173	1	MEB_L_CLKDRV_PRI	Limb Clock Drive Relay Primary Position	0 1	ALL_PRIMARY NOT_PRIMARY	U
174	1	MEB_N_CLKDRV_RED	Nadir Clock Drive Relay Redundant Position	0 1	ALL_REDUNDANT NOT_REDUNDANT	U
175	1	MEB_N_CLKDRV_PRI	Nadir Clock Drive Relay Primary Position	0 1	ALL_PRIMARY NOT_PRIMARY	U
176	10	M_MCSR_SPARE6	Unused register bits	0 1	OPEN CLOSED	U
186	1	M_L_XMEB_RELAY	Position of Non-Operating MEB Limb Motor Relay	0 1	CLOSED OPEN	U
187	1	M_N_XMEB_RELAY	Position of Non-Operating MEB Nadir Motor Relay	0 1	CLOSED OPEN	U
188	3	M_MCSR_SPARE5	Unused register bits	0 1	OPEN CLOSED	U
191	1	M_MTR_ACTIVE	Motor Control Circuitry Active	0 1	INACTIVE ACTIVE	U
192	3	M_MCSR_SPARE4	Unused register bits	0 1	OPEN CLOSED	U
195	1	M_RELAY_POS	Relay Position	0 1	OPEN CLOSED	U
196	3	M_MCSR_SPARE3	Unused register bits	0 1	OPEN CLOSED	U
199	1	M_MTR_SELECT	Motor Select	0 1	NADIR LIMB	U

Start Bit	Bit Size	Mnemonic Name	Description	Units OR State Value	Conversion Coefficients (formula or C5,C4,C3,C2,C1,C0) OR State Name	Data Type
200	3	M_MCSR_SPARE2	Unused register bits	0 1	OPEN CLOSED	U
203	1	M_RES_ENABLE	Resolver Circuitry Enable	0 1	DISABLED ENABLED	U
204	3	M_MCSR_SPARE1	Unused register bits	0 1	OPEN CLOSED	U
207	1	M_MTR_RES_PWR	Motor and Resolver Power State	0 1	OFF ON	U
208	1	M_L_RESOLV_BUSY	Limb Resolver Data Register - Busy	0 1	NOT_BUSY BUSY	U
209	15	M_L_RESOLV_SPARE	Limb Resolver Data Register - Unused Bits	N/A	N/A	U
224	16	M_L_RESOLV_DATA	Limb Resolver Data Register - Resolver Data	N/A	N/A	U
240	7	M_LMP_SPARE4	Limb Motor Parameter Register - Unused Bits	0 1	CW CCW	U
247	1	M_L_DIRECTION	Limb Motor Direction	0 1	CW CCW	U
248	2	M_LMP_SPARE3	Limb Motor Parameter Register - Unused Bits	0 1	CW CCW	U
250	2	M_L_SPEED	Limb Motor Speed	0 1 2 3	STEPS_SEC_300 STEPS_SEC_200 STEPS_SEC_100 STEPS_SEC_10	U
252	2	M_LMP_SPARE2	Limb Motor Parameter Register - Unused Bits	0 1	CW CCW	U
254	2	M_L_PHASE	Limb Motor Phase	0 1 2 3	INVALID A_MINUS_B_PLUS A_MINUS_B_MINUS A_PLUS_B_MINUS	U
256	4	M_LMP_SPARE1	Limb Motor Parameter Register - Unused Bits	0 1	CW CCW	U
260	12	M_L_STEP_COUNT	Limb Motor Step Count	N/A	N/A	U
272	8	M_L_RETRIES	Limb Motor Retries	N/A	N/A	U
280	16	M_L_DESTINATION	Limb Diffuser Move Destination	N/A	N/A	U
296	16	M_LP_TEC_SETPT	Commanded LP TEC Setpoint	N/A	N/A	U
312	16	M_LP_HTR_SETPT	Commanded LP CCD Window Heater Setpoint	N/A	N/A	U
328	16	M_L_POSITION	Limb Diffuser Motor Position	N/A	N/A	U
344	8	M_L_POS_ID	Limb Diffuser Position ID	N/A	N/A	U
352	8	L_TIM_PAT_VER	Limb Active Timing Pattern Table Version Number -- major version	N/A	N/A	U
360	8	L_TIM_PAT_VER	Limb Active Timing Pattern Table Version Number -- minor version	N/A	N/A	U
368	16	L_ROWS	Rows of Limb Profiler CCD data	N/A	N/A	U
384	16	L_COLS	Columns of Limb Profiler CCD data	N/A	N/A	U
400	16	L_IMG_STATUS	Limb Image Processing Status Word	N/A	N/A	U
416	32	L_INT_HOLD_TIME	Limb TPG Integration Hold Time	milliseconds	-, -, -, -, 0.1, 0	U

Start Bit	Bit Size	Mnemonic Name	Description	Units OR State Value	Conversion Coefficients (formula or C5,C4,C3,C2,C1,C0) OR State Name	Data Type
448	8	L_PROFILE_ID	Active Limb Profile ID	N/A	N/A	U
456	8	L_PROFILE_VER	Limb Imaging Profile Table Version Number -- major version	N/A	N/A	U
464	8	L_PROFILE_VER	Limb Imaging Profile Table Version Number -- minor version	N/A	N/A	U
472	16	L_TIM_PAT_TBL	Limb Timing Pattern Table ID	N/A	N/A	U
488	16	L1_APID	Limb Profiler Image #1 Application ID	N/A	N/A	U
504	16	L2_APID	Limb Profiler Image #2 Application ID	N/A	N/A	U
520	8	L_LIN_CORR	Limb Linearity Correction Flag	0 1	DISABLED ENABLED	U
528	16	L_LIN_CORR_TBL	Limb Linearity Correction Table ID	N/A	N/A	U
544	16	L_FIXED_COADDS	Limb Fixed Coadd Count	N/A	N/A	U
560	8	L_REORDER_IMG	Limb Reorder Image Flag	0 1	DISABLED ENABLED	U
568	8	L_GAIN_CORR	Limb Gain Correction Flag	0 1	DISABLED ENABLED	U
576	16	L_GAIN_CORR_TBL	Limb Gain Correction Table ID	N/A	N/A	U
592	8	L1_BIN_IMG	Limb Profiler Image #1 Bin Image Flag	0 1	DISABLED ENABLED	U
600	16	L1_SAMP_TBL	Limb Profiler Image #1 Sample Table ID	N/A	N/A	U
616	8	L2_BIN_IMG	Limb Profiler Image #2 Bin Image Flag	0 1	DISABLED ENABLED	U
624	16	L2_SAMP_TBL	Limb Profiler Image #2 Sample Table ID	N/A	N/A	U
640	8	L_2ND_IMAGE	Limb Profiler Second Image Flag	0 1	FALSE TRUE	U
648	8	L_GAIN_TBL_VER	Limb Gain Table Version Number -- major version	N/A	N/A	U
656	8	L_GAIN_TBL_VER	Limb Gain Table Version Number -- minor version	N/A	N/A	U
664	8	L_LIN_TBL_VER	Limb Linearity Correction Table Version Number -- major version	N/A	N/A	U
672	8	L_LIN_TBL_VER	Limb Linearity Correction Table Version Number -- minor version	N/A	N/A	U
680	8	L1_SAMP_TBL_VER	Limb Image #1 Sample Table Version Number -- major version	N/A	N/A	U
688	8	L1_SAMP_TBL_VER	Limb Image #1 Sample Table Version Number -- minor version	N/A	N/A	U
696	8	L2_SAMP_TBL_VER	Limb Image #2 Sample Table Version Number -- major version	N/A	N/A	U
704	8	L2_SAMP_TBL_VER	Limb Image #2 Sample Table Version Number -- minor version	N/A	N/A	U
712	16	L1_LAST_IMG_DOY	Time stamp of last good Limb Image #1 (day of year)	N/A	N/A	U
728	32	L1_LAST_IMG_MSEC	Time stamp of last good Limb Image #1	milliseconds	N/A	U
760	16	L1_LAST_IMG_USEC	Time stamp of last good Limb Image #1	microseconds	N/A	U
776	16	L2_LAST_IMG_DOY	Time stamp of last good Limb Image #2 (day of year)	N/A	N/A	U
792	32	L2_LAST_IMG_MSEC	Time stamp of last good Limb Image #2	milliseconds	N/A	U
824	16	L2_LAST_IMG_USEC	Time stamp of last good Limb Image #2	microseconds	N/A	U

Start Bit	Bit Size	Mnemonic Name	Description	Units OR State Value	Conversion Coefficients (formula or C5,C4,C3,C2,C1,C0) OR State Name	Data Type
840	16	M_I_CAL_LED	Current in the active Calibration LED	milliamps	-, -, -, -, 0.006125, 0	S
856	16	M_T_MTR_DRV_BD	Temperature - Motor Driver Board	Celsius	-, -, -, -, 0.0486, -273.15	S
872	16	L_T_TELESCOPE	Temperature - Limb Telescope	Celsius	-32768 to 83: -, -, -8.469E-5, 0.02033, -1.99, 128.8 84 to 343: -, -, -1.465E-6, 0.001323, -0.4741, 86.11 344 to 1795: -, -, -1.044E-8, 4.681E-5, -0.08272, 43.02 1796 to 32767: -, -, -9.53E-11, 1.817E-6, -0.01566, 7.7	S
888	16	L_T_PRISM_1	Temperature - Limb Prism #1	Celsius	-32768 to 83: -, -, -8.469E-5, 0.02033, -1.99, 128.8 84 to 343: -, -, -1.465E-6, 0.001323, -0.4741, 86.11 344 to 1795: -, -, -1.044E-8, 4.681E-5, -0.08272, 43.02 1796 to 32767: -, -, -9.53E-11, 1.817E-6, -0.01566, 7.7	S
904	16	L_T_PRISM_2	Temperature - Limb Prism #2	Celsius	-32768 to 83: -, -, -8.469E-5, 0.02033, -1.99, 128.8 84 to 343: -, -, -1.465E-6, 0.001323, -0.4741, 86.11 344 to 1795: -, -, -1.044E-8, 4.681E-5, -0.08272, 43.02 1796 to 32767: -, -, -9.53E-11, 1.817E-6, -0.01566, 7.7	S
920	16	L_T_CCD	Temperature - Limb CCD	Celsius	-, -, -, -, -0.0238, 58.05	S
936	16	M_V_MTR_RES_5V	Voltage - Motor/Resolver Electronics +5V	Volts	-, -, -, -, 0.000949, 0	S
952	16	M_V_RES_12V	Voltage - Resolver Electronics +12V	Volts	-, -, -, -, 0.00311, 0	S
968	16	M_V_RES_M12V	Voltage - Resolver Electronics -12V	Volts	-, -, -, -, 0.00311, 0	S
984	16	L_T_MOTOR	Temperature - Limb Diffuser Motor	Celsius	-32768 to 83: -, -, -8.469E-5, 0.02033, -1.99, 128.8 84 to 343: -, -, -1.465E-6, 0.001323, -0.4741, 86.11 344 to 1795: -, -, -1.044E-8, 4.681E-5, -0.08272, 43.02 1796 to 32767: -, -, -9.53E-11, 1.817E-6, -0.01566, 7.7	S
1000	16	L_T_HOUSING	Temperature - Limb Housing	Celsius	-32768 to 83: -, -, -8.469E-5, 0.02033, -1.99, 128.8 84 to 343: -, -, -1.465E-6, 0.001323, -0.4741, 86.11 344 to 1795: -, -, -1.044E-8, 4.681E-5, -0.08272, 43.02 1796 to 32767: -, -, -9.53E-11, 1.817E-6, -0.01566, 7.7	S
1016	16	L_T_SUN_SIDE	Temperature - Limb Sun Side	Celsius	-32768 to 83: -, -, -8.469E-5, 0.02033, -1.99, 128.8 84 to 343: -, -, -1.465E-6, 0.001323, -0.4741, 86.11 344 to 1795: -, -, -1.044E-8, 4.681E-5, -0.08272, 43.02 1796 to 32767: -, -, -9.53E-11, 1.817E-6, -0.01566, 7.7	S
1032	16	L_T_DARK_SIDE	Temperature - Limb Dark Side	Celsius	-32768 to 83: -, -, -8.469E-5, 0.02033, -1.99, 128.8 84 to 343: -, -, -1.465E-6, 0.001323, -0.4741, 86.11 344 to 1795: -, -, -1.044E-8, 4.681E-5, -0.08272, 43.02 1796 to 32767: -, -, -9.53E-11, 1.817E-6, -0.01566, 7.7	S
1048	16	L_T_COND_BAR	Temperature - Limb Conductor Bar	Celsius	-32768 to 83: -, -, -8.469E-5, 0.02033, -1.99, 128.8 84 to 343: -, -, -1.465E-6, 0.001323, -0.4741, 86.11 344 to 1795: -, -, -1.044E-8, 4.681E-5, -0.08272, 43.02 1796 to 32767: -, -, -9.53E-11, 1.817E-6, -0.01566, 7.7	S
1064	16	L_T_WINDOW	Temperature - Limb Window	Celsius	-, -, -, -, 0.0483, -273.15	S
1080	16	L_P_HTR_SET	Power Setpoint - Limb CCD Window Heater	Watts	-, -, -, 5.76E-8, 0 ,0	S
1096	16	L_T_SIG_BD	Temperature - Nadir Signal Board	Celsius	-, -, -, -, 0.0486, -273.15	S
1112	16	L_T_TIM_BD	Temperature - Nadir Timing Board	Celsius	-, -, -, -, 0.0486, -273.15	S
1128	32	N/A	HW Start Tag (if image is not sampled)	N/A	N/A	U
varies	varies	N/A	CCD Data (# pixels x 32 bits/pixel)	N/A	N/A	U
varies	32	N/A	HW End Tag (if image is not sampled)	N/A	N/A	U
varies	8	N/A	Pad Byte	N/A	N/A	U

4.3.5 Diagnostic Data

Each Science and each Calibration packet have a corresponding Diagnostic packet. These seven packets are configurable and facilitate sensor performance and calibration investigations. They are output irregularly as needed. Because the diagnostic packets may be large compared to the operational packets, their output rate can be limited by the OMPS allocation on the 1553 Bus. All of these diagnostic packets are described below.

4.3.5.1 Diagnostic Nadir Total Column

The Diagnostic Nadir Total Column packet is output in APID 576 when requested in order to facilitate sensor performance and calibration investigations. The User Data Field contains the OMPS Header, OMPS engineering data and the CCD Data. The size of the CCD Data is configurable with a maximum of 364 x 780 pixels. If all the CCD pixels are sent unbinned, five grouped APID 576 packets are required. Each of the five packets is a grouped packet. Only the first of the five grouped packets contains the engineering data. The first CCSDS packet of each of the five groups contains a secondary header and the OMPS header.

Because the size of APID 576 is configurable, Figure 4.3-29, Figure 4.3-30, and Figure 4.3-31 below show the packet structure of a standalone diagnostic packet, the first packet of the first grouped packet, the middle and last of the grouped packets and the first packet of any but the first group of packets. These figures give a good indication of the structure but are not meant to be a comprehensive presentation of every configuration of the multiple grouped packets. Table 4.3-11 lists the user data fields as if multiple groups of packets were unnecessary.

Check the JPSS MIS Server at https://jpssmis.gsfc.nasa.gov/frontmenu_dsp.cfm to verify that this is the correct version prior to use.

Generic Standalone

	PACKET PRIMARY HEADER							SECONDARY HEADER			User Data Field								
	Verson No.	Packet Identification			Packet Sequence		Packet Length	Start of Scan	Packets in RDR - 1	Spare	OMPS Header			Engineering Data	Science				
		Type Indicator	Sec Hdr Flag	APID	Sequence Flags	Sequence Count					RDR Version	Cont Count -1	Cont Flag	Engineering Data Sections	HW Start Tag	CCD Data	HW End Tag	Pad Byte	TOTAL
Bits	3	1	1	11	2	14	16	64	8	8	16	8	8	1208	32	varies	32	8	varies
Octets	2				2		2	8	1	1	2	1	1	151	4	varies	4	1	varies
Value	000	0	1	0x244	11	varies	varies	varies	varies	varies	varies	varies	varies	varies	varies	varies	varies	varies	

Telemetry Packet

Secondary Header Present

Engineering Data													
Sensor_Info (7)	Mech_SD (59)	Mech_Nadir (62)	Mech_Nadir_SD (73)	Nadir_SD (71)	Nadir_IMG_Profile_SD (50)	Nadir_TC_SD (66)	Curr_LED_SD (26)	Temp_Mech_SD (30)	Temp_Nadir_SD (28)	Volt_Mech_SD (42)	Temp_Nadir (24)	Temp_NP (36)	Temp_TC (35)
64	112	88	88	64	360	96	16	16	48	48	176	16	16
8	14	11	11	8	45	12	2	2	6	6	22	2	2
varies	varies	varies	varies	varies	varies	zeros	varies	varies	varies	varies	varies	varies	varies

Figure 4.3-29. OMPS Ungrouped Diagnostic Nadir Total Column Packet Format

FIRST PACKET

	PACKET PRIMARY HEADER							SECONDARY HEADER			User Data Field						
	Verson No.	Packet Identification			Packet Sequence		Packet Length	Start of Scan	Packets in RDR - 1	Spare	OMPS Header			Engineering Data	Science		
		Type Indicator	Sec Hdr Flag	APID	Sequence Flags	Sequence Count					RDR Version	Cont Count -1	Cont Flag	Engineering Data Sections	HW Start Tag	CCD data (start)	TOTAL
Bits	3	1	1	11	2	14	16	64	8	8	16	8	8	1208	32	6792	8192
Octets	2				2		2	8	1	1	2	1	1	151	4	849	1024
Value	000	0	1	0x244	01	varies	0x03F9	varies	varies	0x00	varies	varies	varies	varies	varies	varies	

Telemetry Packet

Secondary Header Present

Engineering Data													
Sensor_Info (7)	Mech_SD (59)	Mech_Nadir (62)	Mech_Nadir_SD (73)	Nadir_SD (71)	Nadir_IMG_Profile_SD (50)	Nadir_TC_SD (66)	Curr_LED_SD (26)	Temp_Mech_SD (30)	Temp_Nadir_SD (28)	Volt_Mech_SD (42)	Temp_Nadir (24)	Temp_NP (36)	Temp_TC (35)
64	112	88	88	64	360	96	16	16	48	48	176	16	16
8	14	11	11	8	45	12	2	2	6	6	22	2	2
varies	varies	varies	varies	varies	varies	zeros	varies	varies	varies	varies	varies	varies	varies

Figure 4.3-30. OMPS First Grouped Diagnostic Nadir Total Column First Packet Format

Check the JPSS MIS Server at https://jpssmis.gsfc.nasa.gov/frontmenu_dsp.cfm to verify that this is the correct version prior to use.

MIDDLE PACKET

	PACKET PRIMARY HEADER							User Data Field	
	Verson No.	Packet Identification			Packet Sequence		Packet Length	Science	
		Type Indicator	Sec Hdr Flag	APID	Sequence Flags	Sequence Count		CCD data (middle)	TOTAL
Bits	3	1	1	11	2	14	16	8144	8192
Octets	2				2		2	1018	1024
Value	000	0	0	0x244	00	varies	0x03F9	varies	

Telemetry Packet

Middle Packet

Figure 4.3-31. OMPS Grouped Diagnostic Nadir Total Column Middle Packet Format

LAST PACKET

	PACKET PRIMARY HEADER							User Data Field			
	Verson No.	Packet Identification			Packet Sequence		Packet Length	Science			
		Type Indicator	Sec Hdr Flag	APID	Sequence Flags	Sequence Count		CCD data (end)	HW End Tag	Pad Byte	TOTAL
Bits	3	1	1	11	2	14	16	varies	32	8	varies
Octets	2				2		2	varies	4	1	varies
Value	000	0	0	0x244	10	varies	varies	varies	varies	varies	

Telemetry Packet

Last Packet

Figure 4.3-32. OMPS Diagnostic Nadir Total Column Last Packet Format

Check the JPSS MIS Server at https://jpssmis.gsfc.nasa.gov/frontmenu_dsp.cfm to verify that this is the correct version prior to use.

FIRST PACKET of a group, but not of the first group

	PACKET PRIMARY HEADER							SECONDARY HEADER			User Data Field				
	Verson No.	Packet Identification			Packet Sequence		Packet Length	Start of Scan	Packets in RDR - 1	Spare	OMPS Header			Science	
		Type Indicator	Sec Hdr Flag	APID	Sequence Flags	Sequence Count					RDR Version	Cont Count -1	Cont Flag	CCD data (middle)	TOTAL
Bits	3	1	1	11	2	14	16	64	8	8	16	8	8	8032	8192
Octets	2				2		2	8	1	1	2	1	1	1004	1024
Value	000	0	1	0x244	01	varies	0x03F9	varies	varies	0x00	varies	varies	varies	varies	

Telemetry Packet

Secondary Header Present

Figure 4.3-33. OMPS Diagnostic Nadir Total Column Last Packet Format

Check the JPSS MIS Server at https://jpssmis.gsfc.nasa.gov/frontmenu_dsp.cfm to verify that this is the correct version prior to use.

Table 4.3-11. OMPS Diagnostic Nadir Total Column Packet User Data Fields

Start Bit	Bit Size	Mnemonic Name	Description	Units OR State Value	Conversion Coefficients (formula or C5,C4,C3,C2,C1,C0) OR State Name	Data Type
0	16	CCSDS_RDR_VER	Version Number of RDR	N/A	N/A	U
16	8	CCSDS_CONT_COUNT	Number of segmented CCSDS packet sequences - 1	N/A	N/A	U
24	8	CCSDS_CONT_FLAG	Indicates if this CCSDS packet begins an RDR	N/A	N/A	U
32	8	SENSOR_ID	OMPS Sensor Identification (not for Dwell or FSW Bootup status)	N/A	N/A	U
40	8	FSW_VERSION	Flight Software Version Number (not for Dwell or FSW Bootup status) -- major version	N/A	N/A	U
48	8	FSW_VERSION	Flight Software Version Number (not for Dwell or FSW Bootup status) -- minor version	N/A	N/A	U
56	2	MEB_BOOT_IMG_ID	Boot Image Identifier (not for Dwell or FSW Bootup status)	0 1 2	0 = Not Used 1 = As-Launched 2 = Modifiable	U
58	5	MEB_SBC_ID	Single Board Computer Identifier (not for Dwell or FSW Bootup status)	N/A	N/A	U
63	1	MEB_SIDE	Active MEB Side (not for Dwell or FSW Bootup status)	0 1	MEB2 MEB1	U
64	8	FSW_INIT_STATUS	Flight Software Initialization Status (not for Dwell or FSW Bootup status)	0 -1	OK ERROR	S
72	8	FSW_INIT_CODE	Flight Software Initialization Code (not for Dwell or FSW Bootup status)	N/A	N/A	U
80	8	FSW_PROTECTED	OMPS Protected State Indicator (not for Dwell or FSW Bootup status)	1 0	PROTECTED UNPROTECTED	U
88	4	MEB_FLASH_PWR	SBC Flash Memory Power State (not for Dwell or FSW Bootup status)	0 1	OFF ON	U
92	4	EEPROM_SIDE	EEPROM side used to boot	0 1	Boot Side 1 Boot Side 2	U
96	7	M_MCR_SPARE6	Unused bits of the Miscellaneous Control Register	N/A	N/A	U
103	1	M_MCR_L_SP_CTRL	Limb Signal Processing Spare Control	0 1	OFF ON	U
104	3	M_MCR_SPARE5	Unused bits of the Miscellaneous Control Register	N/A	N/A	U
107	1	M_MCR_N_SP_CTRL	Nadir Signal Processing Spare Control	0 1	OFF ON	U
108	3	M_MCR_SPARE4	Unused bits of the Miscellaneous Control Register	N/A	N/A	U
111	1	M_MCR_TEST_2	Test connector	0 1	OFF ON	U
112	7	M_MCR_SPARE3	Unused bits of the Miscellaneous Control Register	N/A	N/A	U
119	9	M_CAL_LED_STATE	State of the Calibration LEDs	0 257 272 273	ALL_OFF NADIR_TC_ON NADIR_NP_ON LIMB_ON	U
128	7	M_THCR_SPARE7	Unused bits of the TEC & Heater Control & Status Register	N/A	N/A	U
135	1	M_THCR_DAC_BUSY	State of the DACBUSY line	0 1	NOT_BUSY BUSY	U
136	3	M_THCR_SPARE6	Unused bits of the TEC & Heater Control & Status Register	N/A	N/A	U
139	1	M_TC_TEC_STATE	State of the TC TEC Control	0 1	OFF ON	U
140	3	M_THCR_SPARE5	Unused bits of the TEC & Heater Control & Status Register	N/A	N/A	U
143	1	M_NP_TEC_STATE	State of the NP TEC Control	0 1	OFF ON	U
144	3	M_THCR_SPARE4	Unused bits of the TEC & Heater Control & Status Register	N/A	N/A	U
147	1	M_LP_TEC_STATE	State of the LP TEC Control	0 1	OFF ON	U
148	3	M_THCR_SPARE3	Unused bits of the TEC & Heater Control & Status Register	N/A	N/A	U
151	1	M_TC_HTR_STATE	State of the TC CCD Window Heater Control	0 1	OFF ON	U

Check the JPSS MIS Server at https://jpssmis.gsfc.nasa.gov/frontmenu_dsp.cfm to verify that this is the correct version prior to use.

Start Bit	Bit Size	Mnemonic Name	Description	Units OR State Value	Conversion Coefficients (formula or C5,C4,C3,C2,C1,C0) OR State Name	Data Type
152	3	M_THCR_SPARE2	Unused bits of the TEC & Heater Control & Status Register	N/A	N/A	U
155	1	M_NP_HTR_STATE	State of the NP CCD Window Heater Control	0 1	OFF ON	U
156	3	M_THCR_SPARE1	Unused bits of the TEC & Heater Control & Status Register	N/A	N/A	U
159	1	M_LP_HTR_STATE	State of the LP CCD Window Heater Control	0 1	OFF ON	U
160	1	MEB_LP_HTR_PWR	LP Window Heater Power State	0 1	PWR_ENABLED PWR_DISABLED	U
161	1	MEB_NP_HTR_PWR	NP Window Heater Power State	0 1	PWR_ENABLED PWR_DISABLED	U
162	1	MEB_TC_HTR_PWR	TC Window Heater Power State	0 1	PWR_ENABLED PWR_DISABLED	U
163	1	MEB_LP_TEC_PWR	LP TEC Power State	0 1	PWR_ENABLED PWR_DISABLED	U
164	1	MEB_NP_TEC_PWR	NP TEC Power State	0 1	PWR_ENABLED PWR_DISABLED	U
165	1	MEB_TC_TEC_PWR	TC TEC Power State	0 1	PWR_ENABLED PWR_DISABLED	U
166	1	MEB_L_MTR_RELAY	Limb Motor Relay Position	0 1	CLOSED OPEN	U
167	1	MEB_N_MTR_RELAY	Nadir Motor Relay Position	0 1	CLOSED OPEN	U
168	1	MEB_L_PWR	Limb Power Supply State	0 1	PWR_ENABLED PWR_DISABLED	U
169	1	MEB_N_PWR	Nadir Power Supply State	0 1	PWR_ENABLED PWR_DISABLED	U
170	1	MEB_BOOT_SEL_1	Boot Select Bit 1 Relay Position	0 1	CLOSED OPEN	U
171	1	MEB_BOOT_SEL_0	Boot Select Bit 0 Relay Position	0 1	CLOSED OPEN	U
172	1	MEB_L_CLKDRV_RED	Limb Clock Drive Relay Redundant Position	0 1	ALL_REDUNDANT NOT_REDUNDANT	U
173	1	MEB_L_CLKDRV_PRI	Limb Clock Drive Relay Primary Position	0 1	ALL_PRIMARY NOT_PRIMARY	U
174	1	MEB_N_CLKDRV_RED	Nadir Clock Drive Relay Redundant Position	0 1	ALL_REDUNDANT NOT_REDUNDANT	U
175	1	MEB_N_CLKDRV_PRI	Nadir Clock Drive Relay Primary Position	0 1	ALL_PRIMARY NOT_PRIMARY	U
176	10	M_MCSR_SPARE6	Unused register bits	0 1	OPEN CLOSED	U
186	1	M_L_XMEB_RELAY	Position of Non-Operating MEB Limb Motor Relay	0 1	CLOSED OPEN	U
187	1	M_N_XMEB_RELAY	Position of Non-Operating MEB Nadir Motor Relay	0 1	CLOSED OPEN	U
188	3	M_MCSR_SPARE5	Unused register bits	0 1	OPEN CLOSED	U
191	1	M_MTR_ACTIVE	Motor Control Circuitry Active	0 1	INACTIVE ACTIVE	U
192	3	M_MCSR_SPARE4	Unused register bits	0 1	OPEN CLOSED	U
195	1	M_RELAY_POS	Relay Position	0 1	OPEN CLOSED	U
196	3	M_MCSR_SPARE3	Unused register bits	0 1	OPEN CLOSED	U
199	1	M_MTR_SELECT	Motor Select	0 1	NADIR LIMB	U

Check the JPSS MIS Server at https://jpssmis.gsfc.nasa.gov/frontmenu_dsp.cfm to verify that this is the correct version prior to use.

Start Bit	Bit Size	Mnemonic Name	Description	Units OR State Value	Conversion Coefficients (formula or C5,C4,C3,C2,C1,C0) OR State Name	Data Type
200	3	M_MCSR_SPARE2	Unused register bits	0 1	OPEN CLOSED	U
203	1	M_RES_ENABLE	Resolver Circuitry Enable	0 1	DISABLED ENABLED	U
204	3	M_MCSR_SPARE1	Unused register bits	0 1	OPEN CLOSED	U
207	1	M_MTR_RES_PWR	Motor and Resolver Power State	0 1	OFF ON	U
208	1	M_N_RESOLV_BUSY	Nadir Resolver Data Register - Busy	0 1	NOT_BUSY BUSY	U
209	15	M_N_RESOLV_SPARE	Nadir Resolver Data Register - Unused Bits	N/A	N/A	U
224	16	M_N_RESOLV_DATA	Nadir Resolver Data Register - Resolver Data	N/A	N/A	U
240	7	M_NMP_SPARE4	Nadir Motor Parameter Register - Unused Bits	0 1	CW CCW	U
247	1	M_N_DIRECTION	Nadir Motor Direction	0 1	CW CCW	U
248	2	M_NMP_SPARE3	Nadir Motor Parameter Register - Unused Bits	0 1	CW CCW	U
250	2	M_N_SPEED	Nadir Motor Speed	0 1 2 3	STEPS_SEC_300 STEPS_SEC_200 STEPS_SEC_100 STEPS_SEC_10	U
252	2	M_NMP_SPARE2	Nadir Motor Parameter Register - Unused Bits	0 1	CW CCW	U
254	2	M_N_PHASE	Nadir Motor Phase	0 1 2 3	INVALID A_MINUS_B_PLUS A_MINUS_B_MINUS A_PLUS_B_MINUS	U
256	4	M_NMP_SPARE1	Nadir Motor Parameter Register - Unused Bits	0 1	CW CCW	U
260	12	M_N_STEP_COUNT	Nadir Motor Step Count	N/A	N/A	U
272	8	M_N_RETRIES	Nadir Motor Retries	N/A	N/A	U
280	16	M_N_DESTINATION	Nadir Diffuser Move Destination	N/A	N/A	U
296	16	M_TC_TEC_SETPT	Commanded TC TEC Setpoint	N/A	N/A	U
312	16	M_TC_HTR_SETPT	Commanded TC CCD Window Heater Setpoint	N/A	N/A	U
328	16	M_NP_TEC_SETPT	Commanded NP TEC Setpoint	N/A	N/A	U
344	16	M_NP_HTR_SETPT	Commanded NP CCD Window Heater Setpoint	N/A	N/A	U
360	16	M_N_POSITION	Nadir Diffuser Motor Position	N/A	N/A	U
376	8	M_N_POS_ID	Nadir Diffuser Position ID	N/A	N/A	U
384	8	N_TIM_PAT_VER	Nadir Active Timing Pattern Table Version Number -- major version	N/A	N/A	U
392	8	N_TIM_PAT_VER	Nadir Active Timing Pattern Table Version Number -- minor version	N/A	N/A	U
400	16	N_IMG_STATUS	Nadir Image Processing Status	N/A	N/A	U
416	32	N_INT_HOLD_TIME	Nadir TPG Integration Hold Time	milliseconds	-, -, -, -, 0.1, 0	U

Start Bit	Bit Size	Mnemonic Name	Description	Units OR State Value	Conversion Coefficients (formula or C5,C4,C3,C2,C1,C0) OR State Name	Data Type
448	8	N_PROFILE_ID	Active Nadir Profile ID	N/A	N/A	U
456	8	N_PROFILE_VER	Nadir Imaging Profile Table Version Number -- major version	N/A	N/A	U
464	8	N_PROFILE_VER	Nadir Imaging Profile Table Version Number -- minor version	N/A	N/A	U
472	16	N_TIM_PAT_TBL	Nadir Timing Pattern Table ID	N/A	N/A	U
488	16	TC_APID	Nadir Total Column Application ID	N/A	N/A	U
504	16	NP_APID	Nadir Profiler Application ID	N/A	N/A	U
520	8	TC_LIN_CORR	Nadir Total Column Linearity Correction Flag	0 1	DISABLED ENABLED	U
528	16	TC_LIN_CORR_TBL	Nadir Total Column Linearity Correction Table ID	N/A	N/A	U
544	16	TC_FIXED_COADDS	Nadir Total Column Fixed Coadd Count	N/A	N/A	U
560	8	TC_REORDER_IMG	Nadir Total Column Reorder Image Flag	0 1	DISABLED ENABLED	U
568	8	TC_GAIN_CORR	Nadir Total Column Gain Correction Flag	0 1	DISABLED ENABLED	U
576	16	TC_GAIN_CORR_TBL	Nadir Total Column Gain Correction Table ID	N/A	N/A	U
592	8	TC_BIN_IMG	Nadir Total Column Bin Image Flag	0 1	DISABLED ENABLED	U
600	16	TC_SAMP_TBL	Nadir Total Column Sample Table ID	N/A	N/A	U
616	8	NP_LIN_CORR	Nadir Profiler Linearity Correction Flag	0 1	DISABLED ENABLED	U
624	16	NP_LIN_CORR_TBL	Nadir Profiler Linearity Correction Table ID	N/A	N/A	U
640	16	NP_FIXED_COADDS	Nadir Profiler Fixed Coadd Count	N/A	N/A	U
656	8	NP_REORDER_IMG	Nadir Profilier Reorder Image Flag	0 1	DISABLED ENABLED	U
664	8	NP_GAIN_CORR	Nadir Profilier Gain Correction Flag	0 1	DISABLED ENABLED	U
672	16	NP_GAIN_CORR_TBL	Nadir Profilier Gain Correction Table ID	N/A	N/A	U
688	8	NP_BIN_IMG	Nadir Profilier Bin Image Flag	0 1	DISABLED ENABLED	U
696	16	NP_SAMP_TBL	Nadir Profilier Sample Table ID	N/A	N/A	U
712	8	TC_GAIN_TBL_VER	Nadir Total Column Gain Table Version -- major version	N/A	N/A	U
720	8	TC_GAIN_TBL_VER	Nadir Total Column Gain Table Version -- minor version	N/A	N/A	U
728	8	NP_GAIN_TBL_VER	Nadir Profiler Gain Table Version -- major version	N/A	N/A	U
736	8	NP_GAIN_TBL_VER	Nadir Profiler Gain Table Version -- minor version	N/A	N/A	U
744	8	TC_LIN_TBL_VER	Nadir Total Column Linearity Table Version -- major version	N/A	N/A	U
752	8	TC_LIN_TBL_VER	Nadir Total Column Linearity Table Version -- minor version	N/A	N/A	U
760	8	NP_LIN_TBL_VER	Nadir Profiler Linearity Table Version -- major version	N/A	N/A	U
768	8	NP_LIN_TBL_VER	Nadir Profiler Linearity Table Version -- minor version	N/A	N/A	U
776	8	TC_SAMP_TBL_VER	Nadir Total Column Sample Table Version -- major version	N/A	N/A	U
784	8	TC_SAMP_TBL_VER	Nadir Total Column Sample Table Version -- minor version	N/A	N/A	U
792	8	NP_SAMP_TBL_VER	Nadir Profiler Sample Table Version -- major version	N/A	N/A	U
800	8	NP_SAMP_TBL_VER	Nadir Profiler Sample Table Version -- minor version	N/A	N/A	U

Start Bit	Bit Size	Mnemonic Name	Description	Units OR State Value	Conversion Coefficients (formula or C5,C4,C3,C2,C1,C0) OR State Name	Data Type
808	16	TC_ROWS	Rows of Nadir Total Column CCD data	N/A	N/A	U
824	16	TC_COLS	Columns of Nadir Total Column CCD data	N/A	N/A	U
840	16	TC_LAST_IMG_DOY	Time stamp of last good TC image (day of year)	N/A	N/A	U
856	32	TC_LAST_IMG_MSEC	Time stamp of last good TC image	milliseconds	N/A	U
888	16	TC_LAST_IMG_USEC	Time stamp of last good TC image	microseconds	N/A	U
904	16	M_I_CAL_LED	Current in the active Calibration LED	milliamps	-, -, -, -, 0.006125, 0	S
920	16	M_T_MTR_DRV_BD	Temperature - Motor Driver Board	Celsius	-, -, -, -, 0.0486, -273.15	S
936	16	N_T_TELESCOPE	Temperature - Nadir Telescope	Celsius	-32768 to 83: -, -, -8.469E-5, 0.02033, -1.99, 128.8 84 to 343: -, -, -1.465E-6, 0.001323, -0.4741, 86.11 344 to 1795: -, -, -1.044E-8, 4.681E-5, -0.08272, 43.02 1796 to 32767: -, -, -9.53E-11, 1.817E-6, -0.01566, 7.7	S
952	16	TC_T_CCD	Temperature - Nadir Total Column CCD	Celsius	-, -, -, -, -0.0238, 58.05	S
968	16	NP_T_CCD	Temperature - Nadir Profiler CCD	Celsius	-, -, -, -, -0.0238, 58.05	S
984	16	M_V_MTR_RES_5V	Voltage - Motor/Resolver Electronics +5V	Volts	-, -, -, -, 0.000949, 0	S
1000	16	M_V_RES_12V	Voltage - Resolver Electronics +12V	Volts	-, -, -, -, 0.00311, 0	S
1016	16	M_V_RES_M12V	Voltage - Resolver Electronics -12V	Volts	-, -, -, -, 0.00311, 0	S
1032	16	N_T_MOTOR	Temperature - Nadir Diffuser Motor	Celsius	-32768 to 83: -, -, -8.469E-5, 0.02033, -1.99, 128.8 84 to 343: -, -, -1.465E-6, 0.001323, -0.4741, 86.11 344 to 1795: -, -, -1.044E-8, 4.681E-5, -0.08272, 43.02 1796 to 32767: -, -, -9.53E-11, 1.817E-6, -0.01566, 7.7	S
1048	16	N_T_HOUSING	Temperature - Nadir Calibration Housing	Celsius	-32768 to 83: -, -, -8.469E-5, 0.02033, -1.99, 128.8 84 to 343: -, -, -1.465E-6, 0.001323, -0.4741, 86.11 344 to 1795: -, -, -1.044E-8, 4.681E-5, -0.08272, 43.02 1796 to 32767: -, -, -9.53E-11, 1.817E-6, -0.01566, 7.7	S
1064	16	N_T_SUN_SIDE	Temperature - Nadir Sun Side	Celsius	-32768 to 83: -, -, -8.469E-5, 0.02033, -1.99, 128.8 84 to 343: -, -, -1.465E-6, 0.001323, -0.4741, 86.11 344 to 1795: -, -, -1.044E-8, 4.681E-5, -0.08272, 43.02 1796 to 32767: -, -, -9.53E-11, 1.817E-6, -0.01566, 7.7	S
1080	16	N_T_DARK_SIDE	Temperature - Nadir Dark Side	Celsius	-32768 to 83: -, -, -8.469E-5, 0.02033, -1.99, 128.8 84 to 343: -, -, -1.465E-6, 0.001323, -0.4741, 86.11 344 to 1795: -, -, -1.044E-8, 4.681E-5, -0.08272, 43.02 1796 to 32767: -, -, -9.53E-11, 1.817E-6, -0.01566, 7.7	S
1096	16	TC_T_COND_BAR	Temperature - TC Conductor Bar	Celsius	-32768 to 83: -, -, -8.469E-5, 0.02033, -1.99, 128.8 84 to 343: -, -, -1.465E-6, 0.001323, -0.4741, 86.11 344 to 1795: -, -, -1.044E-8, 4.681E-5, -0.08272, 43.02 1796 to 32767: -, -, -9.53E-11, 1.817E-6, -0.01566, 7.7	S
1112	16	NP_T_COND_BAR	Temperature - NP Conductor Bar	Celsius	-32768 to 83: -, -, -8.469E-5, 0.02033, -1.99, 128.8 84 to 343: -, -, -1.465E-6, 0.001323, -0.4741, 86.11 344 to 1795: -, -, -1.044E-8, 4.681E-5, -0.08272, 43.02 1796 to 32767: -, -, -9.53E-11, 1.817E-6, -0.01566, 7.7	S
1128	16	TC_P_HTR_SET	Power Setpoint - TC Window Heater	Watts	-, -, -, 5.76E-8, 0, 0	
1144	16	NP_P_HTR_SET	Power Setpoint - NP Window Heater	Watts	-, -, -, 5.76E-8, 0, 0	S
1160	16	N_T_SIG_BD	Temperature - Nadir Signal Board	Celsius	-, -, -, -, 0.1233, -273.15	S
1176	16	N_T_TIM_BD	Temperature - Nadir Timing Board	Celsius	-, -, -, -, 0.0486, -273.15	S
1192	16	TC_T_HOUSING	Temperature - TC Housing.	Celsius	-32768 to 83: -, -, -8.469E-5, 0.02033, -1.99, 128.8 84 to 343: -, -, -1.465E-6, 0.001323, -0.4741, 86.11 344 to 1795: -, -, -1.044E-8, 4.681E-5, -0.08272, 43.02 1796 to 32767: -, -, -9.53E-11, 1.817E-6, -0.01566, 7.7	S
1208	16	NP_T_WINDOW	Temperature - NP Window	Celsius	-, -, -, -, 0.0483, -273.15	S
1224	16	TC_T_WINDOW	Temperature - TC Window	Celsius	-, -, -, -, 0.0483, -273.15	S
1040	32	N/A	HW Start Tag (if image is not sampled)	N/A	N/A	U
varies	varies	N/A	CCD Data (# pixels x 32 bits/pixel)	N/A	N/A	U
varies	32	N/A	HW End Tag (if image is not sampled)	N/A	N/A	U
varies	8	N/A	Pad Byte	N/A	N/A	U

4.3.5.2 Diagnostic Nadir Profiler

The Diagnostic Nadir Profiler packet is output in APID 577 when requested in order to facilitate sensor performance and calibration investigations. The User Data Field contains the OMPS Header, OMPS engineering data and the CCD Data. The size of the CCD Data is configurable with a maximum of 364 x 390 pixels. If all the CCD pixels are sent unbinned, five grouped APID 577 packets are required. Each of the five packets is a grouped packet. Only the first of the five grouped packets contains the engineering data. The first CCSDS packet of each of the five groups contains a secondary header and the OMPS header.

Because the size of APID 577 is configurable, Figure 4.3-32 and Figure 4.3-33 below show the packet structure of a standalone diagnostic packet, the first packet of the first grouped packet, the middle and last of the grouped packets and the first packet of any but the first group of packets. These figures give a good indication of the structure but are not meant to be a comprehensive presentation of every configuration of the multiple grouped packets. Table 4.3-12 lists the user data fields as if multiple groups of packets were unnecessary.

FIRST PACKET

	PACKET PRIMARY HEADER							SECONDARY HEADER			User Data Field					
	Verson No.	Packet Identification			Packet Sequence		Packet Length	Start of Scan	Packets in RDR - 1	Spare	OMPS Header			Engineering Data	Science	
		Type Indicator	Sec Hdr Flag	APID	Sequence Flags	Sequence Count					RDR Version	Cont Count -1	Cont Flag	Engineering Data Sections	CCD data (147 x 2 pixels) (start)	TOTAL
Bits	3	1	1	11	2	14	16	64	8	8	16	8	8	1208	6824	8192
Octets	2				2		2	8	1	1	2	1	1	151	853	1024
Value	000	0	1	0x241	01	varies	0x03F9	varies	0x01	0x00	varies	varies	varies	varies	varies	

Telemetry Packet

Secondary Header Present

First Packet

Engineering Data													
Sensor_Info (7)	Mech_SD (59)	Mech_Nadir (62)	Mech_Nadir_SD (73)	Nadir_SD (71)	Nadir_IMG_Profile_SD (50)	Nadir_NP_SD (68)	Curr_LED_SD (26)	Temp_Mech_SD (30)	Temp_Nadir_SD (28)	Volt_Mech_SD (42)	Temp_Nadir (24)	Temp_NP (36)	Temp_TC (35)
64	112	88	88	64	360	96	16	16	48	48	176	16	16
8	14	11	11	8	45	12	2	2	6	6	22	2	2
varies	varies	varies	varies	varies	varies	varies	varies	varies	varies	varies	varies	varies	varies

Figure 4.3-34. OMPS Ungrouped Diagnostic Nadir Profiler Packet Format

FIRST PACKET

	PACKET PRIMARY HEADER							SECONDARY HEADER			User Data Field						
	Verson No.	Packet Identification			Packet Sequence		Packet Length	Start of Scan	Packets in RDR - 1	Spare	OMPS Header			Engineering Data	Science		
		Type Indicator	Sec Hdr Flag	APID	Sequence Flags	Sequence Count					RDR Version	Cont Count -1	Cont Flag	Engineering Data Sections	HW Start Tag	CCD data (start)	TOTAL
Bits	3	1	1	11	2	14	16	64	8	8	16	8	8	1208	32	6792	8192
Octets	2				2		2	8	1	1	2	1	1	151	4	849	1024
Value	000	0	1	0x245	01	varies	0x03F9	varies	varies	0x0	varies	varies	varies	varies	varies	varies	

Telemetry Packet

Secondary Header Present

Engineering Data													
Sensor_Info (7)	Mech_SD (59)	Mech_Nadir (62)	Mech_Nadir_SD (73)	Nadir_SD (71)	Nadir_IMG_Profile_SD (50)	Nadir_TC_SD (66)	Curr_LED_SD (26)	Temp_Mech_SD (30)	Temp_Nadir_SD (28)	Volt_Mech_SD (42)	Temp_Nadir (24)	Temp_NP (36)	Temp_TC (35)
64	112	88	88	64	360	96	16	16	48	48	176	16	16
8	14	11	11	8	45	12	2	2	6	6	22	2	2
varies	varies	varies	varies	varies	varies	zeros	varies	varies	varies	varies	varies	varies	varies

Figure 4.3-35. OMPS Grouped Diagnostic Nadir Profiler First Packet Format

MIDDLE PACKET

	PACKET PRIMARY HEADER							User Data Field	
	Verson No.	Packet Identification			Packet Sequence		Packet Length	Science	
		Type Indicator	Sec Hdr Flag	APID	Sequence Flags	Sequence Count		CCD data (middle)	TOTAL
Bits	3	1	1	11	2	14	16	8144	8192
Octets	2				2		2	1018	1024
Value	000	0	0	0x245	00	varies	0x03F9	varies	

Telemetry Packet

Middle Packet

Figure 4.3-36. OMPS Grouped Diagnostic Nadir Profiler Middle Packet Format

Check the JPSS MIS Server at https://jpssmis.gsfc.nasa.gov/frontmenu_dsp.cfm to verify that this is the correct version prior to use.

LAST PACKET

	PACKET PRIMARY HEADER							User Data Field			
	Verson No.	Packet Identification			Packet Sequence		Packet Length	Science			
		Type Indicator	Sec Hdr Flag	APID	Sequence Flags	Sequence Count		CCD data (end)	HW End Tag	Pad Byte	TOTAL
Bits	3	1	1	11	2	14	16	varies	32	8	varies
Octets	2				2		2	varies	4	1	varies
Value	000	0	0	0x245	10	varies	varies	varies	varies	varies	

Telemetry Packet

Last Packet

Figure 4.3-37. OMPS Grouped Diagnostic Nadir Profiler Last Packet Format

FIRST PACKET of a group, but not of the first group

	PACKET PRIMARY HEADER							SECONDARY HEADER			User Data Field				
	Verson No.	Packet Identification			Packet Sequence		Packet Length	Start of Scan	Packets in RDR - 1	Spare	OMPS Header			Science	
		Type Indicator	Sec Hdr Flag	APID	Sequence Flags	Sequence Count					RDR Version	Cont Count -1	Cont Flag	CCD data (middle)	TOTAL
Bits	3	1	1	11	2	14	16	64	8	8	16	8	8	8032	8192
Octets	2				2		2	8	1	1	2	1	1	1004	1024
Value	000	0	1	0x245	01	varies	0x03F9	varies	varies	0x00	varies	varies	varies	varies	

Telemetry Packet

Secondary Header Present

Figure 4.3-38. OMPS Grouped Diagnostic Nadir Profiler First Packet Format

Check the JPSS MIS Server at https://jpssmis.gsfc.nasa.gov/frontmenu_dsp.cfm to verify that this is the correct version prior to use.

Table 4.3-12. OMPS Diagnostic Nadir Profiler Packet User Data Fields

Start Bit	Bit Size	Mnemonic Name	Description	Units OR State Value	Conversion Coefficients (formula or C5,C4,C3,C2,C1,C0) OR State Name	Data Type
0	16	CCSDS_RDR_VER	Version Number of RDR	N/A	N/A	U
16	8	CCSDS_CONT_COUNT	Number of segmented CCSDS packet sequences - 1	N/A	N/A	U
24	8	CCSDS_CONT_FLAG	Indicates if this CCSDS packet begins an RDR	N/A	N/A	U
32	8	SENSOR_ID	OMPS Sensor Identification (not for Dwell or FSW Bootup status)	N/A	N/A	U
40	8	FSW_VERSION	Flight Software Version Number (not for Dwell or FSW Bootup status) -- major version	N/A	N/A	U
48	8	FSW_VERSION	Flight Software Version Number (not for Dwell or FSW Bootup status) -- minor version	N/A	N/A	U
56	2	MEB_BOOT_IMG_ID	Boot Image Identifier (not for Dwell or FSW Bootup status)	0 1 2	Not Used As-Launched Modifiable	U
58	5	MEB_SBC_ID	Single Board Computer Identifier (not for Dwell or FSW Bootup status)	N/A	N/A	U
63	1	MEB_SIDE	Active MEB Side (not for Dwell or FSW Bootup status)	0 1	MEB2 MEB1	U
64	8	FSW_INIT_STATUS	Flight Software Initialization Status (not for Dwell or FSW Bootup status)	0 -1	OK ERROR	S
72	8	FSW_INIT_CODE	Flight Software Initialization Code (not for Dwell or FSW Bootup status)	N/A	N/A	U
80	8	FSW_PROTECTED	OMPS Protected State Indicator (not for Dwell or FSW Bootup status)	1 0	PROTECTED UNPROTECTED	U
88	4	MEB_FLASH_PWR	SBC Flash Memory Power State (not for Dwell or FSW Bootup status)	0 1	OFF ON	U
92	4	EEPROM_SIDE	EEPROM side used to boot	0 1	Boot Side 1 Boot Side 2	U
96	7	M_MCR_SPARE6	Unused bits of the Miscellaneous Control Register	N/A	N/A	U
103	1	M_MCR_L_SP_CTRL	Limb Signal Processing Spare Control	0 1	OFF ON	U
104	3	M_MCR_SPARE5	Unused bits of the Miscellaneous Control Register	N/A	N/A	U
107	1	M_MCR_N_SP_CTRL	Nadir Signal Processing Spare Control	0 1	OFF ON	U
108	3	M_MCR_SPARE4	Unused bits of the Miscellaneous Control Register	N/A	N/A	U
111	1	M_MCR_TEST_2	Test connector	0 1	OFF ON	U
112	7	M_MCR_SPARE3	Unused bits of the Miscellaneous Control Register	N/A	N/A	U
119	9	M_CAL_LED_STATE	State of the Calibration LEDs	0 257 272 273	ALL_OFF NADIR_TC_ON NADIR_NP_ON LIMB_ON	U
128	7	M_THCR_SPARE7	Unused bits of the TEC & Heater Control & Status Register	N/A	N/A	U
135	1	M_THCR_DAC_BUSY	State of the DACBUSY line	0 1	NOT_BUSY BUSY	U
136	3	M_THCR_SPARE6	Unused bits of the TEC & Heater Control & Status Register	N/A	N/A	U
139	1	M_TC_TEC_STATE	State of the TC TEC Control	0 1	OFF ON	U
140	3	M_THCR_SPARE5	Unused bits of the TEC & Heater Control & Status Register	N/A	N/A	U
143	1	M_NP_TEC_STATE	State of the NP TEC Control	0 1	OFF ON	U
144	3	M_THCR_SPARE4	Unused bits of the TEC & Heater Control & Status Register	N/A	N/A	U
147	1	M_LP_TEC_STATE	State of the LP TEC Control	0 1	OFF ON	U
148	3	M_THCR_SPARE3	Unused bits of the TEC & Heater Control & Status Register	N/A	N/A	U
151	1	M_TC_HTR_STATE	State of the TC CCD Window Heater Control	0 1	OFF ON	U

Check the JPSS MIS Server at https://jpssmis.gsfc.nasa.gov/frontmenu_dsp.cfm to verify that this is the correct version prior to use.

Start Bit	Bit Size	Mnemonic Name	Description	Units OR State Value	Conversion Coefficients (formula or C5,C4,C3,C2,C1,C0) OR State Name	Data Type
152	3	M_THCR_SPARE2	Unused bits of the TEC & Heater Control & Status Register	N/A	N/A	U
155	1	M_NP_HTR_STATE	State of the NP CCD Window Heater Control	0 1	OFF ON	U
156	3	M_THCR_SPARE1	Unused bits of the TEC & Heater Control & Status Register	N/A	N/A	U
159	1	M_LP_HTR_STATE	State of the LP CCD Window Heater Control	0 1	OFF ON	U
160	1	MEB_LP_HTR_PWR	LP Window Heater Power State	0 1	PWR_ENABLED PWR_DISABLED	U
161	1	MEB_NP_HTR_PWR	NP Window Heater Power State	0 1	PWR_ENABLED PWR_DISABLED	U
162	1	MEB_TC_HTR_PWR	TC Window Heater Power State	0 1	PWR_ENABLED PWR_DISABLED	U
163	1	MEB_LP_TEC_PWR	LP TEC Power State	0 1	PWR_ENABLED PWR_DISABLED	U
164	1	MEB_NP_TEC_PWR	NP TEC Power State	0 1	PWR_ENABLED PWR_DISABLED	U
165	1	MEB_TC_TEC_PWR	TC TEC Power State	0 1	PWR_ENABLED PWR_DISABLED	U
166	1	MEB_L_MTR_RELAY	Limb Motor Relay Position	0 1	CLOSED OPEN	U
167	1	MEB_N_MTR_RELAY	Nadir Motor Relay Position	0 1	CLOSED OPEN	U
168	1	MEB_L_PWR	Limb Power Supply State	0 1	PWR_ENABLED PWR_DISABLED	U
169	1	MEB_N_PWR	Nadir Power Supply State	0 1	PWR_ENABLED PWR_DISABLED	U
170	1	MEB_BOOT_SEL_1	Boot Select Bit 1 Relay Position	0 1	CLOSED OPEN	U
171	1	MEB_BOOT_SEL_0	Boot Select Bit 0 Relay Position	0 1	CLOSED OPEN	U
172	1	MEB_L_CLKDRV_RED	Limb Clock Drive Relay Redundant Position	0 1	ALL_REDUNDANT NOT_REDUNDANT	U
173	1	MEB_L_CLKDRV_PRI	Limb Clock Drive Relay Primary Position	0 1	ALL_PRIMARY NOT_PRIMARY	U
174	1	MEB_N_CLKDRV_RED	Nadir Clock Drive Relay Redundant Position	0 1	ALL_REDUNDANT NOT_REDUNDANT	U
175	1	MEB_N_CLKDRV_PRI	Nadir Clock Drive Relay Primary Position	0 1	ALL_PRIMARY NOT_PRIMARY	U
176	10	M_MCSR_SPARE6	Unused register bits	0 1	OPEN CLOSED	U
186	1	M_L_XMEB_RELAY	Position of Non-Operating MEB Limb Motor Relay	0 1	CLOSED OPEN	U
187	1	M_N_XMEB_RELAY	Position of Non-Operating MEB Nadir Motor Relay	0 1	CLOSED OPEN	U
188	3	M_MCSR_SPARE5	Unused register bits	0 1	OPEN CLOSED	U
191	1	M_MTR_ACTIVE	Motor Control Circuitry Active	0 1	INACTIVE ACTIVE	U
192	3	M_MCSR_SPARE4	Unused register bits	0 1	OPEN CLOSED	U
195	1	M_RELAY_POS	Relay Position	0 1	OPEN CLOSED	U
196	3	M_MCSR_SPARE3	Unused register bits	0 1	OPEN CLOSED	U
199	1	M_MTR_SELECT	Motor Select	0 1	NADIR LIMB	U

Start Bit	Bit Size	Mnemonic Name	Description	Units OR State Value	Conversion Coefficients (formula or C5,C4,C3,C2,C1,C0) OR State Name	Data Type
200	3	M_MCSR_SPARE2	Unused register bits	0 1	OPEN CLOSED	U
203	1	M_RES_ENABLE	Resolver Circuitry Enable	0 1	DISABLED ENABLED	U
204	3	M_MCSR_SPARE1	Unused register bits	0 1	OPEN CLOSED	U
207	1	M_MTR_RES_PWR	Motor and Resolver Power State	0 1	OFF ON	U
208	1	M_N_RESOLV_BUSY	Nadir Resolver Data Register - Busy	0 1	NOT_BUSY BUSY	U
209	15	M_N_RESOLV_SPARE	Nadir Resolver Data Register - Unused Bits	N/A	N/A	U
224	16	M_N_RESOLV_DATA	Nadir Resolver Data Register - Resolver Data	N/A	N/A	U
240	7	M_NMP_SPARE4	Nadir Motor Parameter Register - Unused Bits	0 1	CW CCW	U
247	1	M_N_DIRECTION	Nadir Motor Direction	0 1	CW CCW	U
248	2	M_NMP_SPARE3	Nadir Motor Parameter Register - Unused Bits	0 1	CW CCW	U
250	2	M_N_SPEED	Nadir Motor Speed	0 1 2 3	STEPS_SEC_300 STEPS_SEC_200 STEPS_SEC_100 STEPS_SEC_10	U
252	2	M_NMP_SPARE2	Nadir Motor Parameter Register - Unused Bits	0 1	CW CCW	U
254	2	M_N_PHASE	Nadir Motor Phase	0 1 2 3	INVALID A_MINUS_B_PLUS A_MINUS_B_MINUS A_PLUS_B_MINUS	U
256	4	M_NMP_SPARE1	Nadir Motor Parameter Register - Unused Bits	0 1	CW CCW	U
260	12	M_N_STEP_COUNT	Nadir Motor Step Count	N/A	N/A	U
272	8	M_N_RETRIES	Nadir Motor Retries	N/A	N/A	U
280	16	M_N_DESTINATION	Nadir Diffuser Move Destination	N/A	N/A	U
296	16	M_TC_TEC_SETPT	Commanded TC TEC Setpoint	N/A	N/A	U
312	16	M_TC_HTR_SETPT	Commanded TC CCD Window Heater Setpoint	N/A	N/A	U
328	16	M_NP_TEC_SETPT	Commanded NP TEC Setpoint	N/A	N/A	U
344	16	M_NP_HTR_SETPT	Commanded NP CCD Window Heater Setpoint	N/A	N/A	U
360	16	M_N_POSITION	Nadir Diffuser Motor Position	N/A	N/A	U
376	8	M_N_POS_ID	Nadir Diffuser Position ID	N/A	N/A	U
384	8	N_TIM_PAT_VER	Nadir Active Timing Pattern Table Version Number -- major version	N/A	N/A	U
392	8	N_TIM_PAT_VER	Nadir Active Timing Pattern Table Version Number -- minor version	N/A	N/A	U
400	16	N_IMG_STATUS	Nadir Image Processing Status	N/A	N/A	U
416	32	N_INT_HOLD_TIME	Nadir TPG Integration Hold Time	milliseconds	-, -, -, -, 0.1, 0	U

Start Bit	Bit Size	Mnemonic Name	Description	Units OR State Value	Conversion Coefficients (formula or C5,C4,C3,C2,C1,C0) OR State Name	Data Type
448	8	N_PROFILE_ID	Active Nadir Profile ID	N/A	N/A	U
456	8	N_PROFILE_VER	Nadir Imaging Profile Table Version Number -- major version	N/A	N/A	U
464	8	N_PROFILE_VER	Nadir Imaging Profile Table Version Number -- minor version	N/A	N/A	U
472	16	N_TIM_PAT_TBL	Nadir Timing Pattern Table ID	N/A	N/A	U
488	16	TC_APID	Nadir Total Column Application ID	N/A	N/A	U
504	16	NP_APID	Nadir Profiler Application ID	N/A	N/A	U
520	8	TC_LIN_CORR	Nadir Total Column Linearity Correction Flag	0 1	DISABLED ENABLED	U
528	16	TC_LIN_CORR_TBL	Nadir Total Column Linearity Correction Table ID	N/A	N/A	U
544	16	TC_FIXED_COADDS	Nadir Total Column Fixed Coadd Count	N/A	N/A	U
560	8	TC_REORDER_IMG	Nadir Total Column Reorder Image Flag	0 1	DISABLED ENABLED	U
568	8	TC_GAIN_CORR	Nadir Total Column Gain Correction Flag	0 1	DISABLED ENABLED	U
576	16	TC_GAIN_CORR_TBL	Nadir Total Column Gain Correction Table ID	N/A	N/A	U
592	8	TC_BIN_IMG	Nadir Total Column Bin Image Flag	0 1	DISABLED ENABLED	U
600	16	TC_SAMP_TBL	Nadir Total Column Sample Table ID	N/A	N/A	U
616	8	NP_LIN_CORR	Nadir Profiler Linearity Correction Flag	0 1	DISABLED ENABLED	U
624	16	NP_LIN_CORR_TBL	Nadir Profiler Linearity Correction Table ID	N/A	N/A	U
640	16	NP_FIXED_COADDS	Nadir Profiler Fixed Coadd Count	N/A	N/A	U
656	8	NP_REORDER_IMG	Nadir Profilier Reorder Image Flag	0 1	DISABLED ENABLED	U
664	8	NP_GAIN_CORR	Nadir Profilier Gain Correction Flag	0 1	DISABLED ENABLED	U
672	16	NP_GAIN_CORR_TBL	Nadir Profilier Gain Correction Table ID	N/A	N/A	U
688	8	NP_BIN_IMG	Nadir Profilier Bin Image Flag	0 1	DISABLED ENABLED	U
696	16	NP_SAMP_TBL	Nadir Profilier Sample Table ID	N/A	N/A	U
712	8	TC_GAIN_TBL_VER	Nadir Total Column Gain Table Version -- major version	N/A	N/A	U
720	8	TC_GAIN_TBL_VER	Nadir Total Column Gain Table Version -- minor version	N/A	N/A	U
728	8	NP_GAIN_TBL_VER	Nadir Profiler Gain Table Version -- major version	N/A	N/A	U
736	8	NP_GAIN_TBL_VER	Nadir Profiler Gain Table Version -- minor version	N/A	N/A	U
744	8	TC_LIN_TBL_VER	Nadir Total Column Linearity Table Version -- major version	N/A	N/A	U
752	8	TC_LIN_TBL_VER	Nadir Total Column Linearity Table Version -- minor version	N/A	N/A	U
760	8	NP_LIN_TBL_VER	Nadir Profiler Linearity Table Version -- major version	N/A	N/A	U
768	8	NP_LIN_TBL_VER	Nadir Profiler Linearity Table Version -- minor version	N/A	N/A	U
776	8	TC_SAMP_TBL_VER	Nadir Total Column Sample Table Version -- major version	N/A	N/A	U
784	8	TC_SAMP_TBL_VER	Nadir Total Column Sample Table Version -- minor version	N/A	N/A	U
792	8	NP_SAMP_TBL_VER	Nadir Profiler Sample Table Version -- major version	N/A	N/A	U
800	8	NP_SAMP_TBL_VER	Nadir Profiler Sample Table Version -- minor version	N/A	N/A	U

Start Bit	Bit Size	Mnemonic Name	Description	Units OR State Value	Conversion Coefficients (formula or C5,C4,C3,C2,C1,C0) OR State Name	Data Type
808	16	NP_ROWS	Rows of Nadir Total Column CCD data	N/A	N/A	U
824	16	NP_COLS	Columns of Nadir Total Column CCD data	N/A	N/A	U
840	16	NP_LAST_IMG_DOY	Time stamp of last good TC image (day of year)	N/A	N/A	U
856	32	NP_LAST_IMG_MSEC	Time stamp of last good TC image	milliseconds	N/A	U
888	16	NP_LAST_IMG_USEC	Time stamp of last good TC image	microseconds	N/A	U
904	16	M_I_CAL_LED	Current in the active Calibration LED	milliamps	-, -, -, -, 0.006125, 0	S
920	16	M_T_MTR_DRV_BD	Temperature - Motor Driver Board	Celsius	-, -, -, -, 0.0486, -273.15	S
936	16	N_T_TELESCOPE	Temperature - Nadir Telescope	Celsius	-32768 to 83: -, -, -8.469E-5, 0.02033, -1.99, 128.8 84 to 343: -, -, -1.465E-6, 0.001323, -0.4741, 86.11 344 to 1795: -, -, -1.044E-8, 4.681E-5, -0.08272, 43.02 1796 to 32767: -, -, -9.53E-11, 1.817E-6, -0.01566, 7.7	S
952	16	TC_T_CCD	Temperature - Nadir Total Column CCD	Celsius	-, -, -, -, -0.0238, 58.05	S
968	16	NP_T_CCD	Temperature - Nadir Profiler CCD	Celsius	-, -, -, -, -0.0238, 58.05	S
984	16	M_V_MTR_RES_5V	Voltage - Motor/Resolver Electronics +5V	Volts	-, -, -, -, 0.000949, 0	S
1000	16	M_V_RES_12V	Voltage - Resolver Electronics +12V	Volts	-, -, -, -, 0.00311, 0	S
1016	16	M_V_RES_M12V	Voltage - Resolver Electronics -12V	Volts	-, -, -, -, 0.00311, 0	S
1032	16	N_T_MOTOR	Temperature - Nadir Diffuser Motor	Celsius	-32768 to 83: -, -, -8.469E-5, 0.02033, -1.99, 128.8 84 to 343: -, -, -1.465E-6, 0.001323, -0.4741, 86.11 344 to 1795: -, -, -1.044E-8, 4.681E-5, -0.08272, 43.02 1796 to 32767: -, -, -9.53E-11, 1.817E-6, -0.01566, 7.7	S
1048	16	N_T_HOUSING	Temperature - Nadir Calibration Housing	Celsius	-32768 to 83: -, -, -8.469E-5, 0.02033, -1.99, 128.8 84 to 343: -, -, -1.465E-6, 0.001323, -0.4741, 86.11 344 to 1795: -, -, -1.044E-8, 4.681E-5, -0.08272, 43.02 1796 to 32767: -, -, -9.53E-11, 1.817E-6, -0.01566, 7.7	S
1064	16	N_T_SUN_SIDE	Temperature - Nadir Sun Side	Celsius	-32768 to 83: -, -, -8.469E-5, 0.02033, -1.99, 128.8 84 to 343: -, -, -1.465E-6, 0.001323, -0.4741, 86.11 344 to 1795: -, -, -1.044E-8, 4.681E-5, -0.08272, 43.02 1796 to 32767: -, -, -9.53E-11, 1.817E-6, -0.01566, 7.7	S
1080	16	N_T_DARK_SIDE	Temperature - Nadir Dark Side	Celsius	-32768 to 83: -, -, -8.469E-5, 0.02033, -1.99, 128.8 84 to 343: -, -, -1.465E-6, 0.001323, -0.4741, 86.11 344 to 1795: -, -, -1.044E-8, 4.681E-5, -0.08272, 43.02 1796 to 32767: -, -, -9.53E-11, 1.817E-6, -0.01566, 7.7	S
1096	16	TC_T_COND_BAR	Temperature - TC Conductor Bar	Celsius	-32768 to 83: -, -, -8.469E-5, 0.02033, -1.99, 128.8 84 to 343: -, -, -1.465E-6, 0.001323, -0.4741, 86.11 344 to 1795: -, -, -1.044E-8, 4.681E-5, -0.08272, 43.02 1796 to 32767: -, -, -9.53E-11, 1.817E-6, -0.01566, 7.7	S
1112	16	NP_T_COND_BAR	Temperature - NP Conductor Bar	Celsius	-32768 to 83: -, -, -8.469E-5, 0.02033, -1.99, 128.8 84 to 343: -, -, -1.465E-6, 0.001323, -0.4741, 86.11 344 to 1795: -, -, -1.044E-8, 4.681E-5, -0.08272, 43.02 1796 to 32767: -, -, -9.53E-11, 1.817E-6, -0.01566, 7.7	S
1128	16	TC_P_HTR_SET	Power Setpoint - TC Window Heater	Watts	-, -, -, 5.76E-8, 0, 0	
1144	16	NP_P_HTR_SET	Power Setpoint - NP Window Heater	Watts	-, -, -, 5.76E-8, 0, 0	S
1160	16	N_T_SIG_BD	Temperature - Nadir Signal Board	Celsius	-, -, -, -, 0.1233, -273.15	S
1176	16	N_T_TIM_BD	Temperature - Nadir Timing Board	Celsius	-, -, -, -, 0.0486, -273.15	S
1192	16	TC_T_HOUSING	Temperature - TC Housing.	Celsius	-32768 to 83: -, -, -8.469E-5, 0.02033, -1.99, 128.8 84 to 343: -, -, -1.465E-6, 0.001323, -0.4741, 86.11 344 to 1795: -, -, -1.044E-8, 4.681E-5, -0.08272, 43.02 1796 to 32767: -, -, -9.53E-11, 1.817E-6, -0.01566, 7.7	S
1208	16	NP_T_WINDOW	Temperature - NP Window	Celsius	-, -, -, -, 0.0483, -273.15	S
1224	16	TC_T_WINDOW	Temperature - TC Window	Celsius	-, -, -, -, 0.0483, -273.15	S
1040	32	N/A	HW Start Tag (if image is not sampled)	N/A	N/A	U
varies	varies	N/A	CCD Data (# pixels x 32 bits/pixel)	N/A	N/A	U
varies	32	N/A	HW End Tag (if image is not sampled)	N/A	N/A	U
varies	8	N/A	Pad Byte	N/A	N/A	U

4.3.5.3 Diagnostic Limb Profiler Long Exposure

The Diagnostic Limb Profiler Long Exposure (L2) packet is output in APID 578 when requested in order to facilitate sensor performance and calibration investigations. The User Data Field contains the OMPS Header, OMPS engineering data and the CCD Data. The size of the CCD Data is configurable with a maximum of 364 x 780 pixels. If all the CCD pixels are sent unbinned, five grouped APID 578 packets are required. Each of the five packets is a grouped packet. Only the first of the five grouped packets contains the engineering data. The first CCSDS packet of each of the five groups contains a secondary header and the OMPS header.

Because the size of APID 578 is configurable, Figure 4.3-34, Figure 4.3-35, and Figure 4.3-36 below show the packet structure of a standalone diagnostic packet, the first packet of the first grouped packet, the middle and last of the grouped packets and the first packet of any but the first group of packets. These figures give a good indication of the structure but are not meant to be a comprehensive presentation of every configuration of the multiple grouped packets. Table 4.3-13 lists the user data fields as if multiple groups of packets were unnecessary.

Generic Standalone

	PACKET PRIMARY HEADER							SECONDARY HEADER			User Data Field							
	Verson No.	Packet Identification			Packet Sequence		Packet Length	Start of Scan	Packets in RDR - 1	Spare	OMPS Header			Engineering Data	Science			
		Type Indicator	Sec Hdr Flag	APID	Sequence Flags	Sequence Count					RDR Version	Cont Count -1	Cont Flag	Engineering Data Sections	HW Start Tag	CCD data	HW End Tag	Pad Byte
Bits	3	1	1	11	2	14	16	64	8	8	16	8	8	1096	32	varies	32	8
Octets	2				2		2	8	1	1	2	1	1	137	4	varies	4	1
Value	000	0	1	0x246	01	varies	varies	varies	0x00	0x00	varies	varies	varies	varies	varies	varies	varies	varies

TOTAL
varies
varies

Telemetry Packet

Secondary Header Present

Engineering Data

Sensor_Info (7)	Mech_SD (59)	Mech_Limb (63)	Mech_Limb (72)	Limb_SD (65)	Limb_IMG_Profile_SD (51)	Limb_1st_SD (49)	Limb_2nd_SD (67)	Curr_LED_SD (26)	Temp_Mech_SD (30)	Temp_Limb_SD (29)	Volt_Mech_SD (42)	Temp_Limb (25)
64	112	88	56	96	264	64	64	16	16	64	48	144
8	14	11	7	12	33	8	8	2	2	8	6	18
varies	varies	varies	varies	varies	varies	varies	varies	varies	varies	varies	varies	varies

Figure 4.3-39. OMPS Ungrouped Diagnostic Limb Profiler Long Exposure Packet Format

Check the JPSS MIS Server at https://jpssmis.gsfc.nasa.gov/frontmenu_dsp.cfm to verify that this is the correct version prior to use.

FIRST PACKET

	PACKET PRIMARY HEADER							SECONDARY HEADER			User Data Field						
	Verson No.	Packet Identification			Packet Sequence		Packet Length	Start of Scan	Packets in RDR - 1	Spare	OMPS Header			Engineering Data	Science		
		Type Indicator	Sec Hdr Flag	APID	Sequence Flags	Sequence Count					RDR Version	Cont Count -1	Cont Flag	Engineering Data Sections	HW Start Tag	CCD data (start)	TOTAL
Bits	3	1	1	11	2	14	16	64	8	8	16	8	8	1096	32	6904	8192
Octets	2				2		2	8	1	1	2	1	1	137	4	863	1024
Value	000	0	1	0x246	01	varies	0x03F9	varies	varies	0x0	varies	varies	varies	varies	varies	varies	

Telemetry Packet

Secondary Header Present

Engineering Data

Sensor_Info (7)	Mech_SD (59)	Mech_Limb (63)	Mech_Limb (72)	Limb_SD (65)	Limb_IMG_Profile_SD (51)	Limb_1st_SD (49)	Limb_2nd_SD (67)	Curr_LED_SD (26)	Temp_Mech_SD (30)	Temp_Limb_SD (29)	Volt_Mech_SD (42)	Temp_Limb (25)
64	112	88	56	96	264	64	64	16	16	64	48	144
8	14	11	7	12	33	8	8	2	2	8	6	18
varies	varies	varies	varies	varies	varies	varies	varies	varies	varies	varies	varies	varies

Figure 4.3-40. OMPS First Grouped Diagnostic Limb Profiler Long Exposure First Packet Format

MIDDLE PACKET

	PACKET PRIMARY HEADER							User Data Field	
	Verson No.	Packet Identification			Packet Sequence		Packet Length	Science	
		Type Indicator	Sec Hdr Flag	APID	Sequence Flags	Sequence Count		CCD data (middle)	TOTAL
Bits	3	1	1	11	2	14	16	8144	8192
Octets	2				2		2	1018	1024
Value	000	0	0	0x246	00	varies	0x03F9	varies	

Telemetry Packet

Middle Packet

Figure 4.3-41. OMPS Grouped Diagnostic Limb Profiler Long Exposure Middle Packet Format

Check the JPSS MIS Server at https://jpssmis.gsfc.nasa.gov/frontmenu_dsp.cfm to verify that this is the correct version prior to use.

LAST PACKET

	PACKET PRIMARY HEADER							User Data Field			
	Verson No.	Packet Identification			Packet Sequence		Packet Length	Science			
		Type Indicator	Sec Hdr Flag	APID	Sequence Flags	Sequence Count		CCD data (end)	HW End Tag	Pad Byte	TOTAL
Bits	3	1	1	11	2	14	16	varies	32	8	varies
Octets	2				2		2	varies	4	1	varies
Value	000	0	0	0x246	10	varies	varies	varies	varies	varies	

Telemetry Packet

Last Packet

Figure 4.3-42. OMPS Grouped Diagnostic Limb Profiler Long Exposure Last Packet Format

FIRST PACKET of a group, but not of the f

	PACKET PRIMARY HEADER							SECONDARY HEADER			User Data Field				
	Verson No.	Packet Identification			Packet Sequence		Packet Length	Start of Scan	Packets in RDR - 1	Spare	OMPS Header			Science	
		Type Indicator	Sec Hdr Flag	APID	Sequence Flags	Sequence Count					RDR Version	Cont Count -1	Cont Flag	CCD data (middle)	TOTAL
Bits	3	1	1	11	2	14	16	64	8	8	16	8	8	8032	8192
Octets	2				2		2	8	1	1	2	1	1	1004	1024
Value	000	0	1	0x246	01	varies	0x03F9	varies	varies	0x00	varies	varies	varies	varies	

Telemetry Packet

Secondary Header Present

Figure 4.3-43. OMPS Grouped Diagnostic Limb Profiler Long Exposure First Packet Format

Check the JPSS MIS Server at https://jpssmis.gsfc.nasa.gov/frontmenu_dsp.cfm to verify that this is the correct version prior to use.

Table 4.3-13. OMPS Diagnostic Limb Profiler Long Exposure Packet User Data Fields

Start Bit	Bit Size	Mnemonic Name	Description	Units OR State Value	Conversion Coefficients (formula or C5,C4,C3,C2,C1,C0) OR State Name	Data Type
0	16	CCSDS_RDR_VER	Version Number of RDR	N/A	N/A	U
16	8	CCSDS_CONT_COUNT	Number of segmented CCSDS packet sequences - 1	N/A	N/A	U
24	8	CCSDS_CONT_FLAG	Indicates if this CCSDS packet begins an RDR	N/A	N/A	U
32	8	SENSOR_ID	OMPS Sensor Identification (not for Dwell or FSW Bootup status)	N/A	N/A	U
40	8	FSW_VERSION	Flight Software Version Number (not for Dwell or FSW Bootup status) -- major version	N/A	N/A	U
48	8	FSW_VERSION	Flight Software Version Number (not for Dwell or FSW Bootup status) -- minor version	N/A	N/A	U
56	2	MEB_BOOT_IMG_ID	Boot Image Identifier (not for Dwell or FSW Bootup status)	0 1 2	0 = Not Used 1 = As-Launched 2 = Modifiable	U
58	5	MEB_SBC_ID	Single Board Computer Identifier (not for Dwell or FSW Bootup status)	N/A	N/A	U
63	1	MEB_SIDE	Active MEB Side (not for Dwell or FSW Bootup status)	0 1	MEB2 MEB1	U
64	8	FSW_INIT_STATUS	Flight Software Initialization Status (not for Dwell or FSW Bootup status)	0 -1	OK ERROR	S
72	8	FSW_INIT_CODE	Flight Software Initialization Code (not for Dwell or FSW Bootup status)	N/A	N/A	U
80	8	FSW_PROTECTED	OMPS Protected State Indicator (not for Dwell or FSW Bootup status)	1 0	PROTECTED UNPROTECTED	U
88	4	MEB_FLASH_PWR	SBC Flash Memory Power State (not for Dwell or FSW Bootup status)	0 1	OFF ON	U
92	4	EEPROM_SIDE	EEPROM side used to boot	0 1	Boot Side 1 Boot Side 2	U
96	7	M_MCR_SPARE6	Unused bits of the Miscellaneous Control Register	N/A	N/A	U
103	1	M_MCR_L_SP_CTRL	Limb Signal Processing Spare Control	0 1	OFF ON	U
104	3	M_MCR_SPARE5	Unused bits of the Miscellaneous Control Register	N/A	N/A	U
107	1	M_MCR_N_SP_CTRL	Nadir Signal Processing Spare Control	0 1	OFF ON	U
108	3	M_MCR_SPARE4	Unused bits of the Miscellaneous Control Register	N/A	N/A	U
111	1	M_MCR_TEST_2	Test connector	0 1	OFF ON	U
112	7	M_MCR_SPARE3	Unused bits of the Miscellaneous Control Register	N/A	N/A	U
119	9	M_CAL_LED_STATE	State of the Calibration LEDs	0 257 272 273	ALL_OFF NADIR_TC_ON NADIR_NP_ON LIMB_ON	U
128	7	M_THCR_SPARE7	Unused bits of the TEC & Heater Control & Status Register	N/A	N/A	U
135	1	M_THCR_DAC_BUSY	State of the DACBUSY line	0 1	NOT_BUSY BUSY	U
136	3	M_THCR_SPARE6	Unused bits of the TEC & Heater Control & Status Register	N/A	N/A	U
139	1	M_TC_TEC_STATE	State of the TC TEC Control	0 1	OFF ON	U
140	3	M_THCR_SPARE5	Unused bits of the TEC & Heater Control & Status Register	N/A	N/A	U
143	1	M_NP_TEC_STATE	State of the NP TEC Control	0 1	OFF ON	U
144	3	M_THCR_SPARE4	Unused bits of the TEC & Heater Control & Status Register	N/A	N/A	U
147	1	M_LP_TEC_STATE	State of the LP TEC Control	0 1	OFF ON	U
148	3	M_THCR_SPARE3	Unused bits of the TEC & Heater Control & Status Register	N/A	N/A	U
151	1	M_TC_HTR_STATE	State of the TC CCD Window Heater Control	0 1	OFF ON	U

Check the JPSS MIS Server at https://jpssmis.gsfc.nasa.gov/frontmenu_dsp.cfm to verify that this is the correct version prior to use.

Start Bit	Bit Size	Mnemonic Name	Description	Units OR State Value	Conversion Coefficients (formula or C5,C4,C3,C2,C1,C0) OR State Name	Data Type
152	3	M_THCR_SPARE2	Unused bits of the TEC & Heater Control & Status Register	N/A	N/A	U
155	1	M_NP_HTR_STATE	State of the NP CCD Window Heater Control	0 1	OFF ON	U
156	3	M_THCR_SPARE1	Unused bits of the TEC & Heater Control & Status Register	N/A	N/A	U
159	1	M_LP_HTR_STATE	State of the LP CCD Window Heater Control	0 1	OFF ON	U
160	1	MEB_LP_HTR_PWR	LP Window Heater Power State	0 1	PWR_ENABLED PWR_DISABLED	U
161	1	MEB_NP_HTR_PWR	NP Window Heater Power State	0 1	PWR_ENABLED PWR_DISABLED	U
162	1	MEB_TC_HTR_PWR	TC Window Heater Power State	0 1	PWR_ENABLED PWR_DISABLED	U
163	1	MEB_LP_TEC_PWR	LP TEC Power State	0 1	PWR_ENABLED PWR_DISABLED	U
164	1	MEB_NP_TEC_PWR	NP TEC Power State	0 1	PWR_ENABLED PWR_DISABLED	U
165	1	MEB_TC_TEC_PWR	TC TEC Power State	0 1	PWR_ENABLED PWR_DISABLED	U
166	1	MEB_L_MTR_RELAY	Limb Motor Relay Position	0 1	CLOSED OPEN	U
167	1	MEB_N_MTR_RELAY	Nadir Motor Relay Position	0 1	CLOSED OPEN	U
168	1	MEB_L_PWR	Limb Power Supply State	0 1	PWR_ENABLED PWR_DISABLED	U
169	1	MEB_N_PWR	Nadir Power Supply State	0 1	PWR_ENABLED PWR_DISABLED	U
170	1	MEB_BOOT_SEL_1	Boot Select Bit 1 Relay Position	0 1	CLOSED OPEN	U
171	1	MEB_BOOT_SEL_0	Boot Select Bit 0 Relay Position	0 1	CLOSED OPEN	U
172	1	MEB_L_CLKDRV_RED	Limb Clock Drive Relay Redundant Position	0 1	ALL_REDUNDANT NOT_REDUNDANT	U
173	1	MEB_L_CLKDRV_PRI	Limb Clock Drive Relay Primary Position	0 1	ALL_PRIMARY NOT_PRIMARY	U
174	1	MEB_N_CLKDRV_RED	Nadir Clock Drive Relay Redundant Position	0 1	ALL_REDUNDANT NOT_REDUNDANT	U
175	1	MEB_N_CLKDRV_PRI	Nadir Clock Drive Relay Primary Position	0 1	ALL_PRIMARY NOT_PRIMARY	U
176	10	M_MCSR_SPARE6	Unused register bits	0 1	OPEN CLOSED	U
186	1	M_L_XMEB_RELAY	Position of Non-Operating MEB Limb Motor Relay	0 1	CLOSED OPEN	U
187	1	M_N_XMEB_RELAY	Position of Non-Operating MEB Nadir Motor Relay	0 1	CLOSED OPEN	U
188	3	M_MCSR_SPARE5	Unused register bits	0 1	OPEN CLOSED	U
191	1	M_MTR_ACTIVE	Motor Control Circuitry Active	0 1	INACTIVE ACTIVE	U
192	3	M_MCSR_SPARE4	Unused register bits	0 1	OPEN CLOSED	U
195	1	M_RELAY_POS	Relay Position	0 1	OPEN CLOSED	U
196	3	M_MCSR_SPARE3	Unused register bits	0 1	OPEN CLOSED	U
199	1	M_MTR_SELECT	Motor Select	0 1	NADIR LIMB	U

Start Bit	Bit Size	Mnemonic Name	Description	Units OR State Value	Conversion Coefficients (formula or C5,C4,C3,C2,C1,C0) OR State Name	Data Type
200	3	M_MCSR_SPARE2	Unused register bits	0 1	OPEN CLOSED	U
203	1	M_RES_ENABLE	Resolver Circuitry Enable	0 1	DISABLED ENABLED	U
204	3	M_MCSR_SPARE1	Unused register bits	0 1	OPEN CLOSED	U
207	1	M_MTR_RES_PWR	Motor and Resolver Power State	0 1	OFF ON	U
208	1	M_L_RESOLV_BUSY	Limb Resolver Data Register - Busy	0 1	NOT_BUSY BUSY	U
209	15	M_L_RESOLV_SPARE	Limb Resolver Data Register - Unused Bits	N/A	N/A	U
224	16	M_L_RESOLV_DATA	Limb Resolver Data Register - Resolver Data	N/A	N/A	U
240	7	M_LMP_SPARE4	Limb Motor Parameter Register - Unused Bits	0 1	CW CCW	U
247	1	M_L_DIRECTION	Limb Motor Direction	0 1	CW CCW	U
248	2	M_LMP_SPARE3	Limb Motor Parameter Register - Unused Bits	0 1	CW CCW	U
250	2	M_L_SPEED	Limb Motor Speed	0 1 2 3	STEPS_SEC_300 STEPS_SEC_200 STEPS_SEC_100 STEPS_SEC_10	U
252	2	M_LMP_SPARE2	Limb Motor Parameter Register - Unused Bits	0 1	CW CCW	U
254	2	M_L_PHASE	Limb Motor Phase	0 1 2 3	INVALID A_MINUS_B_PLUS A_MINUS_B_MINUS A_PLUS_B_MINUS	U
256	4	M_LMP_SPARE1	Limb Motor Parameter Register - Unused Bits	0 1	CW CCW	U
260	12	M_L_STEP_COUNT	Limb Motor Step Count	N/A	N/A	U
272	8	M_L_RETRIES	Limb Motor Retries	N/A	N/A	U
280	16	M_L_DESTINATION	Limb Diffuser Move Destination	N/A	N/A	U
296	16	M_LP_TEC_SETPT	Commanded LP TEC Setpoint	N/A	N/A	U
312	16	M_LP_HTR_SETPT	Commanded LP CCD Window Heater Setpoint	N/A	N/A	U
328	16	M_L_POSITION	Limb Diffuser Motor Position	N/A	N/A	U
344	8	M_L_POS_ID	Limb Diffuser Position ID	N/A	N/A	U
352	8	L_TIM_PAT_VER	Limb Active Timing Pattern Table Version Number -- major version	N/A	N/A	U
360	8	L_TIM_PAT_VER	Limb Active Timing Pattern Table Version Number -- minor version	N/A	N/A	U
368	16	L_ROWS	Rows of Limb Profiler CCD data	N/A	N/A	U
384	16	L_COLS	Columns of Limb Profiler CCD data	N/A	N/A	U
400	16	L_IMG_STATUS	Limb Image Processing Status Word	N/A	N/A	U
416	32	L_INT_HOLD_TIME	Limb TPG Integration Hold Time	milliseconds	-, -, -, -, 0.1, 0	U

Check the JPSS MIS Server at https://jpssmis.gsfc.nasa.gov/frontmenu_dsp.cfm to verify that this is the correct version prior to use.

Start Bit	Bit Size	Mnemonic Name	Description	Units OR State Value	Conversion Coefficients (formula or C5,C4,C3,C2,C1,C0) OR State Name	Data Type
448	8	L_PROFILE_ID	Active Limb Profile ID	N/A	N/A	U
456	8	L_PROFILE_VER	Limb Imaging Profile Table Version Number -- major version	N/A	N/A	U
464	8	L_PROFILE_VER	Limb Imaging Profile Table Version Number -- minor version	N/A	N/A	U
472	16	L_TIM_PAT_TBL	Limb Timing Pattern Table ID	N/A	N/A	U
488	16	L1_APID	Limb Profiler Image #1 Application ID	N/A	N/A	U
504	16	L2_APID	Limb Profiler Image #2 Application ID	N/A	N/A	U
520	8	L_LIN_CORR	Limb Linearity Correction Flag	0 1	DISABLED ENABLED	U
528	16	L_LIN_CORR_TBL	Limb Linearity Correction Table ID	N/A	N/A	U
544	16	L_FIXED_COADDS	Limb Fixed Coadd Count	N/A	N/A	U
560	8	L_REORDER_IMG	Limb Reorder Image Flag	0 1	DISABLED ENABLED	U
568	8	L_GAIN_CORR	Limb Gain Correction Flag	0 1	DISABLED ENABLED	U
576	16	L_GAIN_CORR_TBL	Limb Gain Correction Table ID	N/A	N/A	U
592	8	L1_BIN_IMG	Limb Profiler Image #1 Bin Image Flag	0 1	DISABLED ENABLED	U
600	16	L1_SAMP_TBL	Limb Profiler Image #1 Sample Table ID	N/A	N/A	U
616	8	L2_BIN_IMG	Limb Profiler Image #2 Bin Image Flag	0 1	DISABLED ENABLED	U
624	16	L2_SAMP_TBL	Limb Profiler Image #2 Sample Table ID	N/A	N/A	U
640	8	L_2ND_IMAGE	Limb Profiler Second Image Flag	0 1	FALSE TRUE	U
648	8	L_GAIN_TBL_VER	Limb Gain Table Version Number -- major version	N/A	N/A	U
656	8	L_GAIN_TBL_VER	Limb Gain Table Version Number -- minor version	N/A	N/A	U
664	8	L_LIN_TBL_VER	Limb Linearity Correction Table Version Number -- major version	N/A	N/A	U
672	8	L_LIN_TBL_VER	Limb Linearity Correction Table Version Number -- minor version	N/A	N/A	U
680	8	L1_SAMP_TBL_VER	Limb Image #1 Sample Table Version Number -- major version	N/A	N/A	U
688	8	L1_SAMP_TBL_VER	Limb Image #1 Sample Table Version Number -- minor version	N/A	N/A	U
696	8	L2_SAMP_TBL_VER	Limb Image #2 Sample Table Version Number -- major version	N/A	N/A	U
704	8	L2_SAMP_TBL_VER	Limb Image #2 Sample Table Version Number -- minor version	N/A	N/A	U

Check the JPSS MIS Server at https://jpssmis.gsfc.nasa.gov/frontmenu_dsp.cfm to verify that this is the correct version prior to use.

Table 4.3-13. OMPS Diagnostic Limb Profiler Long Exposure Packet User Data Fields (cont)

Start Bit	Bit Size	Mnemonic Name	Description	Units OR State Value	Conversion Coefficients (formula or C5,C4,C3,C2,C1,C0) OR State Name	Data Type
712	16	L2_LAST_IMG_DOY	Time stamp of last good Limb Image #2 (day of year)	N/A	N/A	U
728	32	L2_LAST_IMG_MSEC	Time stamp of last good Limb Image #2	milliseconds	N/A	U
760	16	L2_LAST_IMG_USEC	Time stamp of last good Limb Image #2	microseconds	N/A	U
776	16	M_I_CAL_LED	Current in the active Calibration LED	milliamps	-, -, -, -, 0.006125, 0	S
792	16	M_T_MTR_DRV_BD	Temperature - Motor Driver Board	Celsius	-, -, -, -, 0.0486, -273.15	S
808	16	L_T_TELESCOPE	Temperature - Limb Telescope	Celsius	-32768 to 83: -, -, -8.469E-5, 0.02033, -1.99, 128.8 84 to 343: -, -, -1.465E-6, 0.001323, -0.4741, 86.11 344 to 1795: -, -, -1.044E-8, 4.681E-5, -0.08272, 43.02 1796 to 32767: -, -, -9.53E-11, 1.817E-6, -0.01566, 7.7	S
824	16	L_T_PRISM_1	Temperature - Limb Prism #1	Celsius	-32768 to 83: -, -, -8.469E-5, 0.02033, -1.99, 128.8 84 to 343: -, -, -1.465E-6, 0.001323, -0.4741, 86.11 344 to 1795: -, -, -1.044E-8, 4.681E-5, -0.08272, 43.02 1796 to 32767: -, -, -9.53E-11, 1.817E-6, -0.01566, 7.7	S
840	16	L_T_PRISM_2	Temperature - Limb Prism #2	Celsius	-32768 to 83: -, -, -8.469E-5, 0.02033, -1.99, 128.8 84 to 343: -, -, -1.465E-6, 0.001323, -0.4741, 86.11 344 to 1795: -, -, -1.044E-8, 4.681E-5, -0.08272, 43.02 1796 to 32767: -, -, -9.53E-11, 1.817E-6, -0.01566, 7.7	S
856	16	L_T_CCD	Temperature - Limb CCD	Celsius	-, -, -, -, -0.0238, 58.05	S
872	16	M_V_MTR_RES_5V	Voltage - Motor/Resolver Electronics +5V	Volts	-, -, -, -, 0.000949, 0	S
888	16	M_V_RES_12V	Voltage - Resolver Electronics +12V	Volts	-, -, -, -, 0.00311, 0	S
904	16	M_V_RES_M12V	Voltage - Resolver Electronics -12V	Volts	-, -, -, -, 0.00311, 0	S
920	16	L_T_MOTOR	Temperature - Limb Diffuser Motor	Celsius	-32768 to 83: -, -, -8.469E-5, 0.02033, -1.99, 128.8 84 to 343: -, -, -1.465E-6, 0.001323, -0.4741, 86.11 344 to 1795: -, -, -1.044E-8, 4.681E-5, -0.08272, 43.02 1796 to 32767: -, -, -9.53E-11, 1.817E-6, -0.01566, 7.7	S
936	16	L_T_HOUSING	Temperature - Limb Housing	Celsius	-32768 to 83: -, -, -8.469E-5, 0.02033, -1.99, 128.8 84 to 343: -, -, -1.465E-6, 0.001323, -0.4741, 86.11 344 to 1795: -, -, -1.044E-8, 4.681E-5, -0.08272, 43.02 1796 to 32767: -, -, -9.53E-11, 1.817E-6, -0.01566, 7.7	S
952	16	L_T_SUN_SIDE	Temperature - Limb Sun Side	Celsius	-32768 to 83: -, -, -8.469E-5, 0.02033, -1.99, 128.8 84 to 343: -, -, -1.465E-6, 0.001323, -0.4741, 86.11 344 to 1795: -, -, -1.044E-8, 4.681E-5, -0.08272, 43.02 1796 to 32767: -, -, -9.53E-11, 1.817E-6, -0.01566, 7.7	S
968	16	L_T_DARK_SIDE	Temperature - Limb Dark Side	Celsius	-32768 to 83: -, -, -8.469E-5, 0.02033, -1.99, 128.8 84 to 343: -, -, -1.465E-6, 0.001323, -0.4741, 86.11 344 to 1795: -, -, -1.044E-8, 4.681E-5, -0.08272, 43.02 1796 to 32767: -, -, -9.53E-11, 1.817E-6, -0.01566, 7.7	S
984	16	L_T_COND_BAR	Temperature - Limb Conductor Bar	Celsius	-32768 to 83: -, -, -8.469E-5, 0.02033, -1.99, 128.8 84 to 343: -, -, -1.465E-6, 0.001323, -0.4741, 86.11 344 to 1795: -, -, -1.044E-8, 4.681E-5, -0.08272, 43.02 1796 to 32767: -, -, -9.53E-11, 1.817E-6, -0.01566, 7.7	S
1000	16	L_T_WINDOW	Temperature - Limb Window	Celsius	-, -, -, -, 0.0483, -273.15	S
1016	16	L_P_HTR_SET	Power Setpoint - Limb CCD Window Heater	Watts	-, -, -, 5.76E-8, 0 ,0	S
1032	16	L_T_SIG_BD	Temperature - Nadir Signal Board	Celsius	-, -, -, -, 0.0486, -273.15	S
1048	16	L_T_TIM_BD	Temperature - Nadir Timing Board	Celsius	-, -, -, -, 0.0486, -273.15	S
1064	32	N/A	HW Start Tag (if image is not sampled)	N/A	N/A	U
varies	varies	N/A	CCD Data (# pixels x 32 bits/pixel)	N/A	N/A	U
varies	32	N/A	HW End Tag (if image is not sampled)	N/A	N/A	U
varies	8	N/A	Pad Byte	N/A	N/A	U

4.3.5.4 Diagnostic Limb Profiler Short Exposure

The Diagnostic Limb Profiler Short Exposure (L1) packet is output in APID 579 when requested in order to facilitate sensor performance and calibration investigations. The User Data Field contains the OMPS Header, OMPS engineering data and the CCD Data. The size of the CCD Data is configurable with a maximum of 364 x 780 pixels. If all the CCD pixels are sent unbinned, five grouped APID 579 packets are required. Each of the five packets is a grouped packet. Only the first of the five grouped packets contains the engineering data. The first CCSDS packet of each of the five groups contains a secondary header and the OMPS header.

Because the size of APID 579 is configurable, Figure 4.3-37, Figure 4.3-38, and Figure 4.3-39 below show the packet structure of a standalone diagnostic packet, the first packet of the first grouped packet, the middle and last of the grouped packets and the first packet of any but the first group of packets. These figures give a good indication of the structure but are not meant to be a comprehensive presentation of every configuration of the multiple grouped packets. Table 4.3-14 lists the user data fields as if the multiple groups of packets were unnecessary.

Generic Standalone

	PACKET PRIMARY HEADER							SECONDARY HEADER			User Data Field								
	Verson No.	Packet Identification			Packet Sequence		Packet Length	Start of Scan	Packets in RDR - 1	Spare	OMPS Header			Engineering Data	Science				
		Type Indicator	Sec Hdr Flag	APID	Sequence Flags	Sequence Count					RDR Version	Cont Count -1	Cont Flag	Engineering Data Sections	HW Start Tag	CCD data	HW End Tag	Pad Byte	TOTAL
Bits	3	1	1	11	2	14	16	64	8	8	16	8	8	1096	32	varies	32	8	varies
Octets	2				2		2	8	1	1	2	1	1	137	4	varies	4	1	varies
Value	000	0	1	0x246	01	varies	varies	varies	0x00	0x00	varies	varies	varies	varies	varies	varies	varies	varies	

Telemetry Packet

Secondary Header Present

Engineering Data												
Sensor_Info (7)	Mech_SD (59)	Mech_Limb (63)	Mech_Limb (72)	Limb_SD (65)	Limb_IMG_Profile_SD (51)	Limb_1st_SD (49)	Limb_2nd_SD (67)	Curr_LED_SD (26)	Temp_Mech_SD (30)	Temp_Limb_SD (29)	Volt_Mech_SD (42)	Temp_Limb (25)
64	112	88	56	96	264	64	64	16	16	64	48	144
8	14	11	7	12	33	8	8	2	2	8	6	18
varies	varies	varies	varies	varies	varies	varies	varies	varies	varies	varies	varies	varies

Figure 4.3-44. OMPS Ungrouped Diagnostic Limb Profiler Short Exposure Packet Format

FIRST PACKET

	PACKET PRIMARY HEADER							SECONDARY HEADER			User Data Field						
	Verson No.	Packet Identification			Packet Sequence		Packet Length	Start of Scan	Packets in RDR - 1	Spare	OMPS Header			Engineering Data	Science		
		Type Indicator	Sec Hdr Flag	APID	Sequence Flags	Sequence Count					RDR Version	Cont Count -1	Cont Flag	Engineering Data Sections	HW Start Tag	CCD data (start)	TOTAL
Bits	3	1	1	11	2	14	16	64	8	8	16	8	8	1096	32	6904	8192
Octets	2				2		2	8	1	1	2	1	1	137	4	863	1024
Value	000	0	1	0x246	01	varies	0x03F9	varies	varies	0x0	varies	varies	varies	varies	varies	varies	

Telemetry Packet

Secondary Header Present

Engineering Data												
Sensor_Info (7)	Mech_SD (59)	Mech_Limb (63)	Mech_Limb (72)	Limb_SD (65)	Limb_IMG_Profile_SD (51)	Limb_1st_SD (49)	Limb_2nd_SD (67)	Curr_LED_SD (26)	Temp_Mech_SD (30)	Temp_Limb_SD (29)	Volt_Mech_SD (42)	Temp_Limb (25)
64	112	88	56	96	264	64	64	16	16	64	48	144
8	14	11	7	12	33	8	8	2	2	8	6	18
varies	varies	varies	varies	varies	varies	varies	varies	varies	varies	varies	varies	varies

Figure 4.3-45. OMPS First Grouped Diagnostic Limb Profiler Short Exposure First Packet Format

MIDDLE PACKET

	PACKET PRIMARY HEADER							User Data Field	
	Verson No.	Packet Identification			Packet Sequence		Packet Length	Science	
		Type Indicator	Sec Hdr Flag	APID	Sequence Flags	Sequence Count		CCD data (middle)	TOTAL
Bits	3	1	1	11	2	14	16	8144	8192
Octets	2				2		2	1018	1024
Value	000	0	0	0x246	00	varies	0x03F9	varies	

Telemetry Packet

Middle Packet

Figure 4.3-46. OMPS Grouped Diagnostic Limb Profiler Short Exposure Middle Packet Format

Check the JPSS MIS Server at https://jpssmis.gsfc.nasa.gov/frontmenu_dsp.cfm to verify that this is the correct version prior to use.

LAST PACKET

	PACKET PRIMARY HEADER							User Data Field			
	Verson No.	Packet Identification			Packet Sequence		Packet Length	Science			
		Type Indicator	Sec Hdr Flag	APID	Sequence Flags	Sequence Count		CCD data (end)	HW End Tag	Pad Byte	TOTAL
Bits	3	1	1	11	2	14	16	varies	32	8	varies
Octets	2				2		2	varies	4	1	varies
Value	000	0	0	0x246	10	varies	varies	varies	varies	varies	

Telemetry Packet

Last Packet

Figure 4.3-47. OMPS Grouped Diagnostic Limb Profiler Short Exposure Last Packet Format

FIRST PACKET of a group, but not of the f

	PACKET PRIMARY HEADER							SECONDARY HEADER			User Data Field				
	Verson No.	Packet Identification			Packet Sequence		Packet Length	Start of Scan	Packets in RDR - 1	Spare	OMPS Header			Science	
		Type Indicator	Sec Hdr Flag	APID	Sequence Flags	Sequence Count					RDR Version	Cont Count -1	Cont Flag	CCD data (middle)	TOTAL
Bits	3	1	1	11	2	14	16	64	8	8	16	8	8	8032	8192
Octets	2				2		2	8	1	1	2	1	1	1004	1024
Value	000	0	1	0x246	01	varies	0x03F9	varies	varies	0x00	varies	varies	varies	varies	

Telemetry Packet

Secondary Header Present

Figure 4.3-48. OMPS Grouped Diagnostic Limb Profiler Short Exposure First Packet Format

Check the JPSS MIS Server at https://jpssmis.gsfc.nasa.gov/frontmenu_dsp.cfm to verify that this is the correct version prior to use.

Table 4.3-14. OMPS Diagnostic Limb Profiler Short Exposure Packet User Data Fields

Start Bit	Bit Size	Mnemonic Name	Description	Units OR State Value	Conversion Coefficients (formula or C5,C4,C3,C2,C1,C0) OR State Name	Data Type
0	16	CCSDS_RDR_VER	Version Number of RDR	N/A	N/A	U
16	8	CCSDS_CONT_COUNT	Number of segmented CCSDS packet sequences - 1	N/A	N/A	U
24	8	CCSDS_CONT_FLAG	Indicates if this CCSDS packet begins an RDR	N/A	N/A	U
32	8	SENSOR_ID	OMPS Sensor Identification (not for Dwell or FSW Bootup status)	N/A	N/A	U
40	8	FSW_VERSION	Flight Software Version Number (not for Dwell or FSW Bootup status) -- major version	N/A	N/A	U
48	8	FSW_VERSION	Flight Software Version Number (not for Dwell or FSW Bootup status) -- minor version	N/A	N/A	U
56	2	MEB_BOOT_IMG_ID	Boot Image Identifier (not for Dwell or FSW Bootup status)	0 1 2	Not Used As-Launched Modifiable	U
58	5	MEB_SBC_ID	Single Board Computer Identifier (not for Dwell or FSW Bootup status)	N/A	N/A	U
63	1	MEB_SIDE	Active MEB Side (not for Dwell or FSW Bootup status)	0 1	MEB2 MEB1	U
64	8	FSW_INIT_STATUS	Flight Software Initialization Status (not for Dwell or FSW Bootup status)	0 -1	OK ERROR	S
72	8	FSW_INIT_CODE	Flight Software Initialization Code (not for Dwell or FSW Bootup status)	N/A	N/A	U
80	8	FSW_PROTECTED	OMPS Protected State Indicator (not for Dwell or FSW Bootup status)	1 0	PROTECTED UNPROTECTED	U
88	4	MEB_FLASH_PWR	SBC Flash Memory Power State (not for Dwell or FSW Bootup status)	0 1	OFF ON	U
92	4	EEPROM_SIDE	EEPROM side used to boot	0 1	Boot Side 1 Boot Side 2	U
96	7	M_MCR_SPARE6	Unused bits of the Miscellaneous Control Register	N/A	N/A	U
103	1	M_MCR_L_SP_CTRL	Limb Signal Processing Spare Control	0 1	OFF ON	U
104	3	M_MCR_SPARE5	Unused bits of the Miscellaneous Control Register	N/A	N/A	U
107	1	M_MCR_N_SP_CTRL	Nadir Signal Processing Spare Control	0 1	OFF ON	U
108	3	M_MCR_SPARE4	Unused bits of the Miscellaneous Control Register	N/A	N/A	U
111	1	M_MCR_TEST_2	Test connector	0 1	OFF ON	U
112	7	M_MCR_SPARE3	Unused bits of the Miscellaneous Control Register	N/A	N/A	U
119	9	M_CAL_LED_STATE	State of the Calibration LEDs	0 257 272 273	ALL_OFF NADIR_TC_ON NADIR_NP_ON LIMB_ON	U
128	7	M_THCR_SPARE7	Unused bits of the TEC & Heater Control & Status Register	N/A	N/A	U
135	1	M_THCR_DAC_BUSY	State of the DACBUSY line	0 1	NOT_BUSY BUSY	U
136	3	M_THCR_SPARE6	Unused bits of the TEC & Heater Control & Status Register	N/A	N/A	U
139	1	M_TC_TEC_STATE	State of the TC TEC Control	0 1	OFF ON	U
140	3	M_THCR_SPARE5	Unused bits of the TEC & Heater Control & Status Register	N/A	N/A	U
143	1	M_NP_TEC_STATE	State of the NP TEC Control	0 1	OFF ON	U
144	3	M_THCR_SPARE4	Unused bits of the TEC & Heater Control & Status Register	N/A	N/A	U
147	1	M_LP_TEC_STATE	State of the LP TEC Control	0 1	OFF ON	U
148	3	M_THCR_SPARE3	Unused bits of the TEC & Heater Control & Status Register	N/A	N/A	U
151	1	M_TC_HTR_STATE	State of the TC CCD Window Heater Control	0 1	OFF ON	U

Check the JPSS MIS Server at https://jpssmis.gsfc.nasa.gov/frontmenu_dsp.cfm to verify that this is the correct version prior to use.

Start Bit	Bit Size	Mnemonic Name	Description	Units OR State Value	Conversion Coefficients (formula or C5,C4,C3,C2,C1,C0) OR State Name	Data Type
152	3	M_THCR_SPARE2	Unused bits of the TEC & Heater Control & Status Register	N/A	N/A	U
155	1	M_NP_HTR_STATE	State of the NP CCD Window Heater Control	0 1	OFF ON	U
156	3	M_THCR_SPARE1	Unused bits of the TEC & Heater Control & Status Register	N/A	N/A	U
159	1	M_LP_HTR_STATE	State of the LP CCD Window Heater Control	0 1	OFF ON	U
160	1	MEB_LP_HTR_PWR	LP Window Heater Power State	0 1	PWR_ENABLED PWR_DISABLED	U
161	1	MEB_NP_HTR_PWR	NP Window Heater Power State	0 1	PWR_ENABLED PWR_DISABLED	U
162	1	MEB_TC_HTR_PWR	TC Window Heater Power State	0 1	PWR_ENABLED PWR_DISABLED	U
163	1	MEB_LP_TEC_PWR	LP TEC Power State	0 1	PWR_ENABLED PWR_DISABLED	U
164	1	MEB_NP_TEC_PWR	NP TEC Power State	0 1	PWR_ENABLED PWR_DISABLED	U
165	1	MEB_TC_TEC_PWR	TC TEC Power State	0 1	PWR_ENABLED PWR_DISABLED	U
166	1	MEB_L_MTR_RELAY	Limb Motor Relay Position	0 1	CLOSED OPEN	U
167	1	MEB_N_MTR_RELAY	Nadir Motor Relay Position	0 1	CLOSED OPEN	U
168	1	MEB_L_PWR	Limb Power Supply State	0 1	PWR_ENABLED PWR_DISABLED	U
169	1	MEB_N_PWR	Nadir Power Supply State	0 1	PWR_ENABLED PWR_DISABLED	U
170	1	MEB_BOOT_SEL_1	Boot Select Bit 1 Relay Position	0 1	CLOSED OPEN	U
171	1	MEB_BOOT_SEL_0	Boot Select Bit 0 Relay Position	0 1	CLOSED OPEN	U
172	1	MEB_L_CLKDRV_RED	Limb Clock Drive Relay Redundant Position	0 1	ALL_REDUNDANT NOT_REDUNDANT	U
173	1	MEB_L_CLKDRV_PRI	Limb Clock Drive Relay Primary Position	0 1	ALL_PRIMARY NOT_PRIMARY	U
174	1	MEB_N_CLKDRV_RED	Nadir Clock Drive Relay Redundant Position	0 1	ALL_REDUNDANT NOT_REDUNDANT	U
175	1	MEB_N_CLKDRV_PRI	Nadir Clock Drive Relay Primary Position	0 1	ALL_PRIMARY NOT_PRIMARY	U
176	10	M_MCSR_SPARE6	Unused register bits	0 1	OPEN CLOSED	U
186	1	M_L_XMEB_RELAY	Position of Non-Operating MEB Limb Motor Relay	0 1	CLOSED OPEN	U
187	1	M_N_XMEB_RELAY	Position of Non-Operating MEB Nadir Motor Relay	0 1	CLOSED OPEN	U
188	3	M_MCSR_SPARE5	Unused register bits	0 1	OPEN CLOSED	U
191	1	M_MTR_ACTIVE	Motor Control Circuitry Active	0 1	INACTIVE ACTIVE	U
192	3	M_MCSR_SPARE4	Unused register bits	0 1	OPEN CLOSED	U
195	1	M_RELAY_POS	Relay Position	0 1	OPEN CLOSED	U
196	3	M_MCSR_SPARE3	Unused register bits	0 1	OPEN CLOSED	U
199	1	M_MTR_SELECT	Motor Select	0 1	NADIR LIMB	U

Start Bit	Bit Size	Mnemonic Name	Description	Units OR State Value	Conversion Coefficients (formula or C5,C4,C3,C2,C1,C0) OR State Name	Data Type
200	3	M_MCSR_SPARE2	Unused register bits	0 1	OPEN CLOSED	U
203	1	M_RES_ENABLE	Resolver Circuitry Enable	0 1	DISABLED ENABLED	U
204	3	M_MCSR_SPARE1	Unused register bits	0 1	OPEN CLOSED	U
207	1	M_MTR_RES_PWR	Motor and Resolver Power State	0 1	OFF ON	U
208	1	M_L_RESOLV_BUSY	Limb Resolver Data Register - Busy	0 1	NOT_BUSY BUSY	U
209	15	M_L_RESOLV_SPARE	Limb Resolver Data Register - Unused Bits	N/A	N/A	U
224	16	M_L_RESOLV_DATA	Limb Resolver Data Register - Resolver Data	N/A	N/A	U
240	7	M_LMP_SPARE4	Limb Motor Parameter Register - Unused Bits	0 1	CW CCW	U
247	1	M_L_DIRECTION	Limb Motor Direction	0 1	CW CCW	U
248	2	M_LMP_SPARE3	Limb Motor Parameter Register - Unused Bits	0 1	CW CCW	U
250	2	M_L_SPEED	Limb Motor Speed	0 1 2 3	STEPS_SEC_300 STEPS_SEC_200 STEPS_SEC_100 STEPS_SEC_10	U
252	2	M_LMP_SPARE2	Limb Motor Parameter Register - Unused Bits	0 1	CW CCW	U
254	2	M_L_PHASE	Limb Motor Phase	0 1 2 3	INVALID A_MINUS_B_PLUS A_MINUS_B_MINUS A_PLUS_B_MINUS	U
256	4	M_LMP_SPARE1	Limb Motor Parameter Register - Unused Bits	0 1	CW CCW	U
260	12	M_L_STEP_COUNT	Limb Motor Step Count	N/A	N/A	U
272	8	M_L_RETRIES	Limb Motor Retries	N/A	N/A	U
280	16	M_L_DESTINATION	Limb Diffuser Move Destination	N/A	N/A	U
296	16	M_LP_TEC_SETPT	Commanded LP TEC Setpoint	N/A	N/A	U
312	16	M_LP_HTR_SETPT	Commanded LP CCD Window Heater Setpoint	N/A	N/A	U
328	16	M_L_POSITION	Limb Diffuser Motor Position	N/A	N/A	U
344	8	M_L_POS_ID	Limb Diffuser Position ID	N/A	N/A	U
352	8	L_TIM_PAT_VER	Limb Active Timing Pattern Table Version Number -- major version	N/A	N/A	U
360	8	L_TIM_PAT_VER	Limb Active Timing Pattern Table Version Number -- minor version	N/A	N/A	U
368	16	L_ROWS	Rows of Limb Profiler CCD data	N/A	N/A	U
384	16	L_COLS	Columns of Limb Profiler CCD data	N/A	N/A	U
400	16	L_IMG_STATUS	Limb Image Processing Status Word	N/A	N/A	U
416	32	L_INT_HOLD_TIME	Limb TPG Integration Hold Time	milliseconds	-, -, -, -, 0.1, 0	U

Start Bit	Bit Size	Mnemonic Name	Description	Units OR State Value	Conversion Coefficients (formula or C5,C4,C3,C2,C1,C0) OR State Name	Data Type
448	8	L_PROFILE_ID	Active Limb Profile ID	N/A	N/A	U
456	8	L_PROFILE_VER	Limb Imaging Profile Table Version Number -- major version	N/A	N/A	U
464	8	L_PROFILE_VER	Limb Imaging Profile Table Version Number -- minor version	N/A	N/A	U
472	16	L_TIM_PAT_TBL	Limb Timing Pattern Table ID	N/A	N/A	U
488	16	L1_APID	Limb Profiler Image #1 Application ID	N/A	N/A	U
504	16	L2_APID	Limb Profiler Image #2 Application ID	N/A	N/A	U
520	8	L_LIN_CORR	Limb Linearity Correction Flag	0 1	DISABLED ENABLED	U
528	16	L_LIN_CORR_TBL	Limb Linearity Correction Table ID	N/A	N/A	U
544	16	L_FIXED_COADDS	Limb Fixed Coadd Count	N/A	N/A	U
560	8	L_REORDER_IMG	Limb Reorder Image Flag	0 1	DISABLED ENABLED	U
568	8	L_GAIN_CORR	Limb Gain Correction Flag	0 1	DISABLED ENABLED	U
576	16	L_GAIN_CORR_TBL	Limb Gain Correction Table ID	N/A	N/A	U
592	8	L1_BIN_IMG	Limb Profiler Image #1 Bin Image Flag	0 1	DISABLED ENABLED	U
600	16	L1_SAMP_TBL	Limb Profiler Image #1 Sample Table ID	N/A	N/A	U
616	8	L2_BIN_IMG	Limb Profiler Image #2 Bin Image Flag	0 1	DISABLED ENABLED	U
624	16	L2_SAMP_TBL	Limb Profiler Image #2 Sample Table ID	N/A	N/A	U
640	8	L_2ND_IMAGE	Limb Profiler Second Image Flag	0 1	FALSE TRUE	U
648	8	L_GAIN_TBL_VER	Limb Gain Table Version Number -- major version	N/A	N/A	U
656	8	L_GAIN_TBL_VER	Limb Gain Table Version Number -- minor version	N/A	N/A	U
664	8	L_LIN_TBL_VER	Limb Linearity Correction Table Version Number -- major version	N/A	N/A	U
672	8	L_LIN_TBL_VER	Limb Linearity Correction Table Version Number -- minor version	N/A	N/A	U
680	8	L1_SAMP_TBL_VER	Limb Image #1 Sample Table Version Number -- major version	N/A	N/A	U
688	8	L1_SAMP_TBL_VER	Limb Image #1 Sample Table Version Number -- minor version	N/A	N/A	U
696	8	L2_SAMP_TBL_VER	Limb Image #2 Sample Table Version Number -- major version	N/A	N/A	U
704	8	L2_SAMP_TBL_VER	Limb Image #2 Sample Table Version Number -- minor version	N/A	N/A	U

Start Bit	Bit Size	Mnemonic Name	Description	Units OR State Value	Conversion Coefficients (formula or C5,C4,C3,C2,C1,C0) OR State Name	Data Type
712	16	L1_LAST_IMG_DOY	Time stamp of last good Limb Image #1 (day of year)	N/A	N/A	U
728	32	L1_LAST_IMG_MSEC	Time stamp of last good Limb Image #1	milliseconds	N/A	U
760	16	L1_LAST_IMG_USEC	Time stamp of last good Limb Image #1	microseconds	N/A	U
776	16	M_I_CAL_LED	Current in the active Calibration LED	milliamps	-, -, -, -, 0.006125, 0	S
792	16	M_T_MTR_DRV_BD	Temperature - Motor Driver Board	Celsius	-, -, -, -, 0.0486, -273.15	S
808	16	L_T_TELESCOPE	Temperature - Limb Telescope	Celsius	-32768 to 83: -, -, -8.469E-5, 0.02033, -1.99, 128.8 84 to 343: -, -, -1.465E-6, 0.001323, -0.4741, 86.11 344 to 1795: -, -, -1.044E-8, 4.681E-5, -0.08272, 43.02 1796 to 32767: -, -, -9.53E-11, 1.817E-6, -0.01566, 7.7	S
824	16	L_T_PRISM_1	Temperature - Limb Prism #1	Celsius	-32768 to 83: -, -, -8.469E-5, 0.02033, -1.99, 128.8 84 to 343: -, -, -1.465E-6, 0.001323, -0.4741, 86.11 344 to 1795: -, -, -1.044E-8, 4.681E-5, -0.08272, 43.02 1796 to 32767: -, -, -9.53E-11, 1.817E-6, -0.01566, 7.7	S
840	16	L_T_PRISM_2	Temperature - Limb Prism #2	Celsius	-32768 to 83: -, -, -8.469E-5, 0.02033, -1.99, 128.8 84 to 343: -, -, -1.465E-6, 0.001323, -0.4741, 86.11 344 to 1795: -, -, -1.044E-8, 4.681E-5, -0.08272, 43.02 1796 to 32767: -, -, -9.53E-11, 1.817E-6, -0.01566, 7.7	S
856	16	L_T_CCD	Temperature - Limb CCD	Celsius	-, -, -, -, -0.0238, 58.05	S
872	16	M_V_MTR_RES_5V	Voltage - Motor/Resolver Electronics +5V	Volts	-, -, -, -, 0.000949, 0	S
888	16	M_V_RES_12V	Voltage - Resolver Electronics +12V	Volts	-, -, -, -, 0.00311, 0	S
904	16	M_V_RES_M12V	Voltage - Resolver Electronics -12V	Volts	-, -, -, -, 0.00311, 0	S
920	16	L_T_MOTOR	Temperature - Limb Diffuser Motor	Celsius	-32768 to 83: -, -, -8.469E-5, 0.02033, -1.99, 128.8 84 to 343: -, -, -1.465E-6, 0.001323, -0.4741, 86.11 344 to 1795: -, -, -1.044E-8, 4.681E-5, -0.08272, 43.02 1796 to 32767: -, -, -9.53E-11, 1.817E-6, -0.01566, 7.7	S
936	16	L_T_HOUSING	Temperature - Limb Housing	Celsius	-32768 to 83: -, -, -8.469E-5, 0.02033, -1.99, 128.8 84 to 343: -, -, -1.465E-6, 0.001323, -0.4741, 86.11 344 to 1795: -, -, -1.044E-8, 4.681E-5, -0.08272, 43.02 1796 to 32767: -, -, -9.53E-11, 1.817E-6, -0.01566, 7.7	S
952	16	L_T_SUN_SIDE	Temperature - Limb Sun Side	Celsius	-32768 to 83: -, -, -8.469E-5, 0.02033, -1.99, 128.8 84 to 343: -, -, -1.465E-6, 0.001323, -0.4741, 86.11 344 to 1795: -, -, -1.044E-8, 4.681E-5, -0.08272, 43.02 1796 to 32767: -, -, -9.53E-11, 1.817E-6, -0.01566, 7.7	S
968	16	L_T_DARK_SIDE	Temperature - Limb Dark Side	Celsius	-32768 to 83: -, -, -8.469E-5, 0.02033, -1.99, 128.8 84 to 343: -, -, -1.465E-6, 0.001323, -0.4741, 86.11 344 to 1795: -, -, -1.044E-8, 4.681E-5, -0.08272, 43.02 1796 to 32767: -, -, -9.53E-11, 1.817E-6, -0.01566, 7.7	S
984	16	L_T_COND_BAR	Temperature - Limb Conductor Bar	Celsius	-32768 to 83: -, -, -8.469E-5, 0.02033, -1.99, 128.8 84 to 343: -, -, -1.465E-6, 0.001323, -0.4741, 86.11 344 to 1795: -, -, -1.044E-8, 4.681E-5, -0.08272, 43.02 1796 to 32767: -, -, -9.53E-11, 1.817E-6, -0.01566, 7.7	S
1000	16	L_T_WINDOW	Temperature - Limb Window	Celsius	-, -, -, -, 0.0483, -273.15	S
1016	16	L_P_HTR_SET	Power Setpoint - Limb CCD Window Heater	Watts	-, -, -, 5.76E-8, 0 ,0	S
1032	16	L_T_SIG_BD	Temperature - Nadir Signal Board	Celsius	-, -, -, -, 0.0486, -273.15	S
1048	16	L_T_TIM_BD	Temperature - Nadir Timing Board	Celsius	-, -, -, -, 0.0486, -273.15	S
1064	32	N/A	HW Start Tag (if image is not sampled)	N/A	N/A	U
varies	varies	N/A	CCD Data (# pixels x 32 bits/pixel)	N/A	N/A	U
varies	32	N/A	HW End Tag (if image is not sampled)	N/A	N/A	U
varies	8	N/A	Pad Byte	N/A	N/A	U

4.3.5.5 Diagnostic Nadir Total Column Calibration

The Diagnostic Nadir Total Column Calibration packet is output in APID 580 when requested in order to facilitate sensor performance and calibration investigations. The User Data Field contains the OMPS Header, OMPS engineering data and the CCD Data. The size of the CCD Data is configurable with a maximum of 364 x 780 pixels. If all the CCD pixels are sent unbinned, five grouped APID 580 packets are required. Each of the five packets is a grouped packet. Only the first of the five grouped packets contains the engineering data. The first CCSDS packet of each of the five groups contains a secondary header and the OMPS header.

Because the size of APID 580 is configurable, Figure 4.3-49 Ungrouped Diagnostic Nadir Total Column Calibration Packet Format to Figure 4.3-53 OMPS Grouped Diagnostic Nadir Total Column Calibration First Packet Format below show the packet structure of a standalone diagnostic packet, the first packet of the first grouped packet, the middle and last of the grouped packets and the first packet of any but the first group of packets. These figures give a good indication of the structure but are not meant to be a comprehensive presentation of every configuration of the multiple grouped packets. Table 4.3-15 lists the user data fields as if multiple groups of packets were unnecessary.

Generic Standalone

	PACKET PRIMARY HEADER							SECONDARY HEADER			User Data Field								
	Verson No.	Packet Identification			Packet Sequence		Packet Length	Start of Scan	Packets in RDR - 1	Spare	OMPS Header			Engineering Data	Science				
		Type Indicator	Sec Hdr Flag	APID	Sequence Flags	Sequence Count					RDR Version	Cont Count -1	Cont Flag	Engineering Data Sections	HW Start Tag	CCD Data	HW End Tag	Pad Byte	TOTAL
Bits	3	1	1	11	2	14	16	64	8	8	16	8	8	1208	32	varies	32	8	varies
Octets	2				2		2	8	1	1	2	1	1	151	4	varies	4	1	varies
Value	000	0	1	0x244	11	varies	varies	varies	varies	varies	varies	varies	varies	varies	varies	varies	varies	varies	

Telemetry Packet

Secondary Header Present

Engineering Data													
Sensor_Info (7)	Mech_SD (59)	Mech_Nadir (62)	Mech_Nadir_SD (73)	Nadir_SD (71)	Nadir_IMG_Profile_SD (50)	Nadir_TC_SD (66)	Curr_LED_SD (26)	Temp_Mech_SD (30)	Temp_Nadir_SD (28)	Volt_Mech_SD (42)	Temp_Nadir (24)	Temp_NP (36)	Temp_TC (35)
64	112	88	88	64	360	96	16	16	48	48	176	16	16
8	14	11	11	8	45	12	2	2	6	6	22	2	2
varies	varies	varies	varies	varies	varies	zeros	varies	varies	varies	varies	varies	varies	varies

Figure 4.3-49. Ungrouped Diagnostic Nadir Total Column Calibration Packet Format

FIRST PACKET

	PACKET PRIMARY HEADER							SECONDARY HEADER			User Data Field						
	Verson No.	Packet Identification			Packet Sequence		Packet Length	Start of Scan	Packets in RDR - 1	Spare	OMPS Header			Engineering Data	Science		
		Type Indicator	Sec Hdr Flag	APID	Sequence Flags	Sequence Count					RDR Version	Cont Count -1	Cont Flag	Engineering Data Sections	HW Start Tag	CCD data (start)	TOTAL
Bits	3	1	1	11	2	14	16	64	8	8	16	8	8	1208	32	6792	8192
Octets	2				2		2	8	1	1	2	1	1	151	4	849	1024
Value	000	0	1	0x244	01	varies	0x03F9	varies	varies	0x00	varies	varies	varies	varies	varies	varies	

Telemetry Packet

Secondary Header Present

Engineering Data													
Sensor_Info (7)	Mech_SD (59)	Mech_Nadir (62)	Mech_Nadir_SD (73)	Nadir_SD (71)	Nadir_IMG_Profile_SD (50)	Nadir_TC_SD (66)	Curr_LED_SD (26)	Temp_Mech_SD (30)	Temp_Nadir_SD (28)	Volt_Mech_SD (42)	Temp_Nadir (24)	Temp_NP (36)	Temp_TC (35)
64	112	88	88	64	360	96	16	16	48	48	176	16	16
8	14	11	11	8	45	12	2	2	6	6	22	2	2
varies	varies	varies	varies	varies	varies	zeros	varies	varies	varies	varies	varies	varies	varies

Figure 4.3-50. OMPS First Grouped Diagnostic Nadir Total Column Calibration First Packet Format

MIDDLE PACKET

	PACKET PRIMARY HEADER							User Data Field	
	Verson No.	Packet Identification			Packet Sequence		Packet Length	Science	
		Type Indicator	Sec Hdr Flag	APID	Sequence Flags	Sequence Count		CCD data (middle)	TOTAL
Bits	3	1	1	11	2	14	16	8144	8192
Octets	2				2		2	1018	1024
Value	000	0	0	0x244	00	varies	0x03F9	varies	

Telemetry Packet

Middle Packet

Figure 4.3-51. OMPS Grouped Diagnostic Nadir Total Column Calibration Middle Packet Format

Check the JPSS MIS Server at https://jpssmis.gsfc.nasa.gov/frontmenu_dsp.cfm to verify that this is the correct version prior to use.

LAST PACKET

	PACKET PRIMARY HEADER							User Data Field			
	Verson No.	Packet Identification			Packet Sequence		Packet Length	Science			
		Type Indicator	Sec Hdr Flag	APID	Sequence Flags	Sequence Count		CCD data (end)	HW End Tag	Pad Byte	TOTAL
Bits	3	1	1	11	2	14	16	varies	32	8	varies
Octets	2				2		2	varies	4	1	varies
Value	000	0	0	0x244	10	varies	varies	varies	varies	varies	

Telemetry Packet

Last Packet

Figure 4.3-52. OMPS Grouped Diagnostic Nadir Total Column Calibration Last Packet Format

FIRST PACKET of a group, but not of the first group

	PACKET PRIMARY HEADER							SECONDARY HEADER			User Data Field				
	Verson No.	Packet Identification			Packet Sequence		Packet Length	Start of Scan	Packets in RDR - 1	Spare	OMPS Header			Science	
		Type Indicator	Sec Hdr Flag	APID	Sequence Flags	Sequence Count					RDR Version	Cont Count -1	Cont Flag	CCD data (middle)	TOTAL
Bits	3	1	1	11	2	14	16	64	8	8	16	8	8	8032	8192
Octets	2				2		2	8	1	1	2	1	1	1004	1024
Value	000	0	1	0x244	01	varies	0x03F9	varies	varies	0x00	varies	varies	varies	varies	

Telemetry Packet

Secondary Header Present

Figure 4.3-53. OMPS Grouped Diagnostic Nadir Total Column Calibration First Packet Format

Table 4.3-15. OMPS Diagnostic Nadir Total Column Calibration Packet User Data Fields

Start Bit	Bit Size	Mnemonic Name	Description	Units OR State Value	Conversion Coefficients (formula or C5,C4,C3,C2,C1,C0) OR State Name	Data Type
0	16	CCSDS_RDR_VER	Version Number of RDR	N/A	N/A	U
16	8	CCSDS_CONT_COUNT	Number of segmented CCSDS packet sequences - 1	N/A	N/A	U
24	8	CCSDS_CONT_FLAG	Indicates if this CCSDS packet begins an RDR	N/A	N/A	U
32	8	SENSOR_ID	OMPS Sensor Identification (not for Dwell or FSW Bootup status)	N/A	N/A	U
40	8	FSW_VERSION	Flight Software Version Number (not for Dwell or FSW Bootup status) -- major version	N/A	N/A	U
48	8	FSW_VERSION	Flight Software Version Number (not for Dwell or FSW Bootup status) -- minor version	N/A	N/A	U
56	2	MEB_BOOT_IMG_ID	Boot Image Identifier (not for Dwell or FSW Bootup status)	0 1 2	Not Used As-Launched Modifiable	U
58	5	MEB_SBC_ID	Single Board Computer Identifier (not for Dwell or FSW Bootup status)	N/A	N/A	U
63	1	MEB_SIDE	Active MEB Side (not for Dwell or FSW Bootup status)	0 1	MEB2 MEB1	U
64	8	FSW_INIT_STATUS	Flight Software Initialization Status (not for Dwell or FSW Bootup status)	0 -1	OK ERROR	S
72	8	FSW_INIT_CODE	Flight Software Initialization Code (not for Dwell or FSW Bootup status)	N/A	N/A	U
80	8	FSW_PROTECTED	OMPS Protected State Indicator (not for Dwell or FSW Bootup status)	1 0	PROTECTED UNPROTECTED	U
88	4	MEB_FLASH_PWR	SBC Flash Memory Power State (not for Dwell or FSW Bootup status)	0 1	OFF ON	U
92	4	EEPROM_SIDE	EEPROM side used to boot	0 1	Boot Side 1 Boot Side 2	U
96	7	M_MCR_SPARE6	Unused bits of the Miscellaneous Control Register	N/A	N/A	U
103	1	M_MCR_L_SP_CTRL	Limb Signal Processing Spare Control	0 1	OFF ON	U
104	3	M_MCR_SPARE5	Unused bits of the Miscellaneous Control Register	N/A	N/A	U
107	1	M_MCR_N_SP_CTRL	Nadir Signal Processing Spare Control	0 1	OFF ON	U
108	3	M_MCR_SPARE4	Unused bits of the Miscellaneous Control Register	N/A	N/A	U
111	1	M_MCR_TEST_2	Test connector	0 1	OFF ON	U
112	7	M_MCR_SPARE3	Unused bits of the Miscellaneous Control Register	N/A	N/A	U
119	9	M_CAL_LED_STATE	State of the Calibration LEDs	0 257 272 273	ALL_OFF NADIR_TC_ON NADIR_NP_ON LIMB_ON	U
128	7	M_THCR_SPARE7	Unused bits of the TEC & Heater Control & Status Register	N/A	N/A	U
135	1	M_THCR_DAC_BUSY	State of the DACBUSY line	0 1	NOT_BUSY BUSY	U
136	3	M_THCR_SPARE6	Unused bits of the TEC & Heater Control & Status Register	N/A	N/A	U
139	1	M_TC_TEC_STATE	State of the TC TEC Control	0 1	OFF ON	U
140	3	M_THCR_SPARE5	Unused bits of the TEC & Heater Control & Status Register	N/A	N/A	U
143	1	M_NP_TEC_STATE	State of the NP TEC Control	0 1	OFF ON	U
144	3	M_THCR_SPARE4	Unused bits of the TEC & Heater Control & Status Register	N/A	N/A	U
147	1	M_LP_TEC_STATE	State of the LP TEC Control	0 1	OFF ON	U
148	3	M_THCR_SPARE3	Unused bits of the TEC & Heater Control & Status Register	N/A	N/A	U
151	1	M_TC_HTR_STATE	State of the TC CCD Window Heater Control	0 1	OFF ON	U

Check the JPSS MIS Server at https://jpssmis.gsfc.nasa.gov/frontmenu_dsp.cfm to verify that this is the correct version prior to use.

Start Bit	Bit Size	Mnemonic Name	Description	Units OR State Value	Conversion Coefficients (formula or C5,C4,C3,C2,C1,C0) OR State Name	Data Type
152	3	M_THCR_SPARE2	Unused bits of the TEC & Heater Control & Status Register	N/A	N/A	U
155	1	M_NP_HTR_STATE	State of the NP CCD Window Heater Control	0 1	OFF ON	U
156	3	M_THCR_SPARE1	Unused bits of the TEC & Heater Control & Status Register	N/A	N/A	U
159	1	M_LP_HTR_STATE	State of the LP CCD Window Heater Control	0 1	OFF ON	U
160	1	MEB_LP_HTR_PWR	LP Window Heater Power State	0 1	PWR_ENABLED PWR_DISABLED	U
161	1	MEB_NP_HTR_PWR	NP Window Heater Power State	0 1	PWR_ENABLED PWR_DISABLED	U
162	1	MEB_TC_HTR_PWR	TC Window Heater Power State	0 1	PWR_ENABLED PWR_DISABLED	U
163	1	MEB_LP_TEC_PWR	LP TEC Power State	0 1	PWR_ENABLED PWR_DISABLED	U
164	1	MEB_NP_TEC_PWR	NP TEC Power State	0 1	PWR_ENABLED PWR_DISABLED	U
165	1	MEB_TC_TEC_PWR	TC TEC Power State	0 1	PWR_ENABLED PWR_DISABLED	U
166	1	MEB_L_MTR_RELAY	Limb Motor Relay Position	0 1	CLOSED OPEN	U
167	1	MEB_N_MTR_RELAY	Nadir Motor Relay Position	0 1	CLOSED OPEN	U
168	1	MEB_L_PWR	Limb Power Supply State	0 1	PWR_ENABLED PWR_DISABLED	U
169	1	MEB_N_PWR	Nadir Power Supply State	0 1	PWR_ENABLED PWR_DISABLED	U
170	1	MEB_BOOT_SEL_1	Boot Select Bit 1 Relay Position	0 1	CLOSED OPEN	U
171	1	MEB_BOOT_SEL_0	Boot Select Bit 0 Relay Position	0 1	CLOSED OPEN	U
172	1	MEB_L_CLKDRV_RED	Limb Clock Drive Relay Redundant Position	0 1	ALL_REDUNDANT NOT_REDUNDANT	U
173	1	MEB_L_CLKDRV_PRI	Limb Clock Drive Relay Primary Position	0 1	ALL_PRIMARY NOT_PRIMARY	U
174	1	MEB_N_CLKDRV_RED	Nadir Clock Drive Relay Redundant Position	0 1	ALL_REDUNDANT NOT_REDUNDANT	U
175	1	MEB_N_CLKDRV_PRI	Nadir Clock Drive Relay Primary Position	0 1	ALL_PRIMARY NOT_PRIMARY	U
176	10	M_MCSR_SPARE6	Unused register bits	0 1	OPEN CLOSED	U
186	1	M_L_XMEB_RELAY	Position of Non-Operating MEB Limb Motor Relay	0 1	CLOSED OPEN	U
187	1	M_N_XMEB_RELAY	Position of Non-Operating MEB Nadir Motor Relay	0 1	CLOSED OPEN	U
188	3	M_MCSR_SPARE5	Unused register bits	0 1	OPEN CLOSED	U
191	1	M_MTR_ACTIVE	Motor Control Circuitry Active	0 1	INACTIVE ACTIVE	U
192	3	M_MCSR_SPARE4	Unused register bits	0 1	OPEN CLOSED	U
195	1	M_RELAY_POS	Relay Position	0 1	OPEN CLOSED	U
196	3	M_MCSR_SPARE3	Unused register bits	0 1	OPEN CLOSED	U
199	1	M_MTR_SELECT	Motor Select	0 1	NADIR LIMB	U

Start Bit	Bit Size	Mnemonic Name	Description	Units OR State Value	Conversion Coefficients (formula or C5,C4,C3,C2,C1,C0) OR State Name	Data Type
200	3	M_MCSR_SPARE2	Unused register bits	0 1	OPEN CLOSED	U
203	1	M_RES_ENABLE	Resolver Circuitry Enable	0 1	DISABLED ENABLED	U
204	3	M_MCSR_SPARE1	Unused register bits	0 1	OPEN CLOSED	U
207	1	M_MTR_RES_PWR	Motor and Resolver Power State	0 1	OFF ON	U
208	1	M_N_RESOLV_BUSY	Nadir Resolver Data Register - Busy	0 1	NOT_BUSY BUSY	U
209	15	M_N_RESOLV_SPARE	Nadir Resolver Data Register - Unused Bits	N/A	N/A	U
224	16	M_N_RESOLV_DATA	Nadir Resolver Data Register - Resolver Data	N/A	N/A	U
240	7	M_NMP_SPARE4	Nadir Motor Parameter Register - Unused Bits	0 1	CW CCW	U
247	1	M_N_DIRECTION	Nadir Motor Direction	0 1	CW CCW	U
248	2	M_NMP_SPARE3	Nadir Motor Parameter Register - Unused Bits	0 1	CW CCW	U
250	2	M_N_SPEED	Nadir Motor Speed	0 1 2 3	STEPS_SEC_300 STEPS_SEC_200 STEPS_SEC_100 STEPS_SEC_10	U
252	2	M_NMP_SPARE2	Nadir Motor Parameter Register - Unused Bits	0 1	CW CCW	U
254	2	M_N_PHASE	Nadir Motor Phase	0 1 2 3	INVALID A_MINUS_B_PLUS A_MINUS_B_MINUS A_PLUS_B_MINUS	U
256	4	M_NMP_SPARE1	Nadir Motor Parameter Register - Unused Bits	0 1	CW CCW	U
260	12	M_N_STEP_COUNT	Nadir Motor Step Count	N/A	N/A	U
272	8	M_N_RETRIES	Nadir Motor Retries	N/A	N/A	U
280	16	M_N_DESTINATION	Nadir Diffuser Move Destination	N/A	N/A	U
296	16	M_TC_TEC_SETPT	Commanded TC TEC Setpoint	N/A	N/A	U
312	16	M_TC_HTR_SETPT	Commanded TC CCD Window Heater Setpoint	N/A	N/A	U
328	16	M_NP_TEC_SETPT	Commanded NP TEC Setpoint	N/A	N/A	U
344	16	M_NP_HTR_SETPT	Commanded NP CCD Window Heater Setpoint	N/A	N/A	U
360	16	M_N_POSITION	Nadir Diffuser Motor Position	N/A	N/A	U
376	8	M_N_POS_ID	Nadir Diffuser Position ID	N/A	N/A	U
384	8	N_TIM_PAT_VER	Nadir Active Timing Pattern Table Version Number -- major version	N/A	N/A	U
392	8	N_TIM_PAT_VER	Nadir Active Timing Pattern Table Version Number -- minor version	N/A	N/A	U
400	16	N_IMG_STATUS	Nadir Image Processing Status	N/A	N/A	U
416	32	N_INT_HOLD_TIME	Nadir TPG Integration Hold Time	milliseconds	-, -, -, -, 0.1, 0	U

Check the JPSS MIS Server at https://jpssmis.gsfc.nasa.gov/frontmenu_dsp.cfm to verify that this is the correct version prior to use.

Start Bit	Bit Size	Mnemonic Name	Description	Units OR State Value	Conversion Coefficients (formula or C5,C4,C3,C2,C1,C0) OR State Name	Data Type
448	8	N_PROFILE_ID	Active Nadir Profile ID	N/A	N/A	U
456	8	N_PROFILE_VER	Nadir Imaging Profile Table Version Number -- major version	N/A	N/A	U
464	8	N_PROFILE_VER	Nadir Imaging Profile Table Version Number -- minor version	N/A	N/A	U
472	16	N_TIM_PAT_TBL	Nadir Timing Pattern Table ID	N/A	N/A	U
488	16	TC_APID	Nadir Total Column Application ID	N/A	N/A	U
504	16	NP_APID	Nadir Profiler Application ID	N/A	N/A	U
520	8	TC_LIN_CORR	Nadir Total Column Linearity Correction Flag	0 1	DISABLED ENABLED	U
528	16	TC_LIN_CORR_TBL	Nadir Total Column Linearity Correction Table ID	N/A	N/A	U
544	16	TC_FIXED_COADDS	Nadir Total Column Fixed Coadd Count	N/A	N/A	U
560	8	TC_REORDER_IMG	Nadir Total Column Reorder Image Flag	0 1	DISABLED ENABLED	U
568	8	TC_GAIN_CORR	Nadir Total Column Gain Correction Flag	0 1	DISABLED ENABLED	U
576	16	TC_GAIN_CORR_TBL	Nadir Total Column Gain Correction Table ID	N/A	N/A	U
592	8	TC_BIN_IMG	Nadir Total Column Bin Image Flag	0 1	DISABLED ENABLED	U
600	16	TC_SAMP_TBL	Nadir Total Column Sample Table ID	N/A	N/A	U
616	8	NP_LIN_CORR	Nadir Profiler Linearity Correction Flag	0 1	DISABLED ENABLED	U
624	16	NP_LIN_CORR_TBL	Nadir Profiler Linearity Correction Table ID	N/A	N/A	U
640	16	NP_FIXED_COADDS	Nadir Profiler Fixed Coadd Count	N/A	N/A	U
656	8	NP_REORDER_IMG	Nadir Profilier Reorder Image Flag	0 1	DISABLED ENABLED	U
664	8	NP_GAIN_CORR	Nadir Profilier Gain Correction Flag	0 1	DISABLED ENABLED	U
672	16	NP_GAIN_CORR_TBL	Nadir Profilier Gain Correction Table ID	N/A	N/A	U
688	8	NP_BIN_IMG	Nadir Profilier Bin Image Flag	0 1	DISABLED ENABLED	U
696	16	NP_SAMP_TBL	Nadir Profilier Sample Table ID	N/A	N/A	U
712	8	TC_GAIN_TBL_VER	Nadir Total Column Gain Table Version -- major version	N/A	N/A	U
720	8	TC_GAIN_TBL_VER	Nadir Total Column Gain Table Version -- minor version	N/A	N/A	U
728	8	NP_GAIN_TBL_VER	Nadir Profiler Gain Table Version -- major version	N/A	N/A	U
736	8	NP_GAIN_TBL_VER	Nadir Profiler Gain Table Version -- minor version	N/A	N/A	U
744	8	TC_LIN_TBL_VER	Nadir Total Column Linearity Table Version -- major version	N/A	N/A	U
752	8	TC_LIN_TBL_VER	Nadir Total Column Linearity Table Version -- minor version	N/A	N/A	U
760	8	NP_LIN_TBL_VER	Nadir Profiler Linearity Table Version -- major version	N/A	N/A	U
768	8	NP_LIN_TBL_VER	Nadir Profiler Linearity Table Version -- minor version	N/A	N/A	U
776	8	TC_SAMP_TBL_VER	Nadir Total Column Sample Table Version -- major version	N/A	N/A	U
784	8	TC_SAMP_TBL_VER	Nadir Total Column Sample Table Version -- minor version	N/A	N/A	U
792	8	NP_SAMP_TBL_VER	Nadir Profiler Sample Table Version -- major version	N/A	N/A	U
800	8	NP_SAMP_TBL_VER	Nadir Profiler Sample Table Version -- minor version	N/A	N/A	U

Start Bit	Bit Size	Mnemonic Name	Description	Units OR State Value	Conversion Coefficients (formula or C5,C4,C3,C2,C1,C0) OR State Name	Data Type
808	16	TC_ROWS	Rows of Nadir Total Column CCD data	N/A	N/A	U
824	16	TC_COLS	Columns of Nadir Total Column CCD data	N/A	N/A	U
840	16	TC_LAST_IMG_DOY	Time stamp of last good TC image (day of year)	N/A	N/A	U
856	32	TC_LAST_IMG_MSEC	Time stamp of last good TC image	milliseconds	N/A	U
888	16	TC_LAST_IMG_USEC	Time stamp of last good TC image	microseconds	N/A	U
904	16	M_I_CAL_LED	Current in the active Calibration LED	milliamps	-, -, -, -, 0.006125, 0	S
920	16	M_T_MTR_DRV_BD	Temperature - Motor Driver Board	Celsius	-, -, -, -, 0.0486, -273.15	S
936	16	N_T_TELESCOPE	Temperature - Nadir Telescope	Celsius	-32768 to 83: -, -, -8.469E-5, 0.02033, -1.99, 128.8 84 to 343: -, -, -1.465E-6, 0.001323, -0.4741, 86.11 344 to 1795: -, -, -1.044E-8, 4.681E-5, -0.08272, 43.02 1796 to 32767: -, -, -9.53E-11, 1.817E-6, -0.01566, 7.7	S
952	16	TC_T_CCD	Temperature - Nadir Total Column CCD	Celsius	-, -, -, -, -0.0238, 58.05	S
968	16	NP_T_CCD	Temperature - Nadir Profiler CCD	Celsius	-, -, -, -, -0.0238, 58.05	S
984	16	M_V_MTR_RES_5V	Voltage - Motor/Resolver Electronics +5V	Volts	-, -, -, -, 0.000949, 0	S
1000	16	M_V_RES_12V	Voltage - Resolver Electronics +12V	Volts	-, -, -, -, 0.00311, 0	S
1016	16	M_V_RES_M12V	Voltage - Resolver Electronics -12V	Volts	-, -, -, -, 0.00311, 0	S
1032	16	N_T_MOTOR	Temperature - Nadir Diffuser Motor	Celsius	-32768 to 83: -, -, -8.469E-5, 0.02033, -1.99, 128.8 84 to 343: -, -, -1.465E-6, 0.001323, -0.4741, 86.11 344 to 1795: -, -, -1.044E-8, 4.681E-5, -0.08272, 43.02 1796 to 32767: -, -, -9.53E-11, 1.817E-6, -0.01566, 7.7	S
1048	16	N_T_HOUSING	Temperature - Nadir Calibration Housing	Celsius	-32768 to 83: -, -, -8.469E-5, 0.02033, -1.99, 128.8 84 to 343: -, -, -1.465E-6, 0.001323, -0.4741, 86.11 344 to 1795: -, -, -1.044E-8, 4.681E-5, -0.08272, 43.02 1796 to 32767: -, -, -9.53E-11, 1.817E-6, -0.01566, 7.7	S
1064	16	N_T_SUN_SIDE	Temperature - Nadir Sun Side	Celsius	-32768 to 83: -, -, -8.469E-5, 0.02033, -1.99, 128.8 84 to 343: -, -, -1.465E-6, 0.001323, -0.4741, 86.11 344 to 1795: -, -, -1.044E-8, 4.681E-5, -0.08272, 43.02 1796 to 32767: -, -, -9.53E-11, 1.817E-6, -0.01566, 7.7	S
1080	16	N_T_DARK_SIDE	Temperature - Nadir Dark Side	Celsius	-32768 to 83: -, -, -8.469E-5, 0.02033, -1.99, 128.8 84 to 343: -, -, -1.465E-6, 0.001323, -0.4741, 86.11 344 to 1795: -, -, -1.044E-8, 4.681E-5, -0.08272, 43.02 1796 to 32767: -, -, -9.53E-11, 1.817E-6, -0.01566, 7.7	S
1096	16	TC_T_COND_BAR	Temperature - TC Conductor Bar	Celsius	-32768 to 83: -, -, -8.469E-5, 0.02033, -1.99, 128.8 84 to 343: -, -, -1.465E-6, 0.001323, -0.4741, 86.11 344 to 1795: -, -, -1.044E-8, 4.681E-5, -0.08272, 43.02 1796 to 32767: -, -, -9.53E-11, 1.817E-6, -0.01566, 7.7	S
1112	16	NP_T_COND_BAR	Temperature - NP Conductor Bar	Celsius	-32768 to 83: -, -, -8.469E-5, 0.02033, -1.99, 128.8 84 to 343: -, -, -1.465E-6, 0.001323, -0.4741, 86.11 344 to 1795: -, -, -1.044E-8, 4.681E-5, -0.08272, 43.02 1796 to 32767: -, -, -9.53E-11, 1.817E-6, -0.01566, 7.7	S
1128	16	TC_P_HTR_SET	Power Setpoint - TC Window Heater	Watts	-, -, -, 5.76E-8, 0, 0	
1144	16	NP_P_HTR_SET	Power Setpoint - NP Window Heater	Watts	-, -, -, 5.76E-8, 0, 0	S
1160	16	N_T_SIG_BD	Temperature - Nadir Signal Board	Celsius	-, -, -, -, 0.1233, -273.15	S
1176	16	N_T_TIM_BD	Temperature - Nadir Timing Board	Celsius	-, -, -, -, 0.0486, -273.15	S
1192	16	TC_T_HOUSING	Temperature - TC Housing.	Celsius	-32768 to 83: -, -, -8.469E-5, 0.02033, -1.99, 128.8 84 to 343: -, -, -1.465E-6, 0.001323, -0.4741, 86.11 344 to 1795: -, -, -1.044E-8, 4.681E-5, -0.08272, 43.02 1796 to 32767: -, -, -9.53E-11, 1.817E-6, -0.01566, 7.7	S
1208	16	NP_T_WINDOW	Temperature - NP Window	Celsius	-, -, -, -, 0.0483, -273.15	S
1224	16	TC_T_WINDOW	Temperature - TC Window	Celsius	-, -, -, -, 0.0483, -273.15	S
1240	32	N/A	HW Start Tag (if image is not sampled)	N/A	N/A	U
varies	varies	N/A	CCD Data (# pixels x 32 bits/pixel)	N/A	N/A	U
varies	32	N/A	HW End Tag (if image is not sampled)	N/A	N/A	U
varies	8	N/A	Pad Byte	N/A	N/A	U

4.3.5.6 Diagnostic Nadir Profiler Calibration

The Diagnostic Nadir Profiler Calibration packet is output in APID 581 when requested in order to facilitate sensor performance and calibration investigations. The User Data Field contains the OMPS Header, OMPS engineering data and the CCD Data. The size of the CCD Data is configurable with a maximum of 364 x 780 pixels. If all the CCD pixels are sent unbinned, five grouped APID 581 packets are required. Each of the five packets is a grouped packet. Only the first of the five grouped packets contains the engineering data. The first CCSDS packet of each of the five groups contains a secondary header and the OMPS header.

Because the size of APID 581 is configurable, Figure 4.3.54 to Figure 4.3-58 OMPS Grouped Diagnostic Nadir Profiler Calibration First Packet Format.

Generic Standalone

	PACKET PRIMARY HEADER							SECONDARY HEADER			User Data Field								
	Verson No.	Packet Identification			Packet Sequence		Packet Length	Start of Scan	Packets in RDR - 1	Spare	OMPS Header			Engineering Data	Science				
		Type Indicator	Sec Hdr Flag	APID	Sequence Flags	Sequence Count					RDR Version	Cont Count -1	Cont Flag	Engineering Data Sections	HW Start Tag	CCD data	HW End Tag	Pad Byte	
Bits	3	1	1	11	2	14	16	64	8	8	16	8	8	1208	32	varies	32	8	TOTAL varies
Octets	2				2		2	8	1	1	2	1	1	151	4	varies	4	1	varies
Value	000	0	1	0x245	01	varies	varies	varies	0x00	0x00	varies	varies	varies	varies	varies	varies	varies	varies	

Telemetry Packet

Secondary Header Present

Engineering Data													
Sensor_Info (7)	Mech_SD (59)	Mech_Nadir (62)	Mech_Nadir_SD (73)	Nadir_SD (71)	Nadir_IMG_Profile_SD (50)	Nadir_TC_SD (66)	Curr_LED_SD (26)	Temp_Mech_SD (30)	Temp_Nadir_SD (28)	Volt_Mech_SD (42)	Temp_Nadir (24)	Temp_NP (36)	Temp_TC (35)
64	112	88	88	64	360	96	16	16	48	48	176	16	16
8	14	11	11	8	45	12	2	2	6	6	22	2	2
varies	varies	varies	varies	varies	varies	zeros	varies	varies	varies	varies	varies	varies	varies

Figure 4.3-54. OMPS Ungrouped Diagnostic Nadir Profiler Calibration Packet Format

FIRST PACKET

	PACKET PRIMARY HEADER							SECONDARY HEADER			User Data Field						
	Verson No.	Packet Identification			Packet Sequence		Packet Length	Start of Scan	Packets in RDR - 1	Spare	OMPS Header			Engineering Data	Science		
		Type Indicator	Sec Hdr Flag	APID	Sequence Flags	Sequence Count					RDR Version	Cont Count -1	Cont Flag	Engineering Data Sections	HW Start Tag	CCD data (start)	TOTAL
Bits	3	1	1	11	2	14	16	64	8	8	16	8	8	1208	32	6792	8192
Octets	2				2		2	8	1	1	2	1	1	151	4	849	1024
Value	000	0	1	0x245	01	varies	0x03F9	varies	varies	0x0	varies	varies	varies	varies	varies	varies	

Telemetry Packet

Secondary Header Present

Engineering Data													
Sensor_Info (7)	Mech_SD (59)	Mech_Nadir (62)	Mech_Nadir_SD (73)	Nadir_SD (71)	Nadir_IMG_Profile_SD (50)	Nadir_TC_SD (66)	Curr_LED_SD (26)	Temp_Mech_SD (30)	Temp_Nadir_SD (28)	Volt_Mech_SD (42)	Temp_Nadir (24)	Temp_NP (36)	Temp_TC (35)
64	112	88	88	64	360	96	16	16	48	48	176	16	16
8	14	11	11	8	45	12	2	2	6	6	22	2	2
varies	varies	varies	varies	varies	varies	zeros	varies	varies	varies	varies	varies	varies	varies

Figure 4.3-55. OMPS First Grouped Diagnostic Nadir Profiler Calibration First Packet Format

MIDDLE PACKET

	PACKET PRIMARY HEADER							User Data Field	
	Verson No.	Packet Identification			Packet Sequence		Packet Length	Science	
		Type Indicator	Sec Hdr Flag	APID	Sequence Flags	Sequence Count		CCD data (middle)	TOTAL
Bits	3	1	1	11	2	14	16	8144	8192
Octets	2				2		2	1018	1024
Value	000	0	0	0x245	00	varies	0x03F9	varies	

Telemetry Packet

Middle Packet

Figure 4.3-56. OMPS Grouped Diagnostic Nadir Profiler Calibration Middle Packet Format

Check the JPSS MIS Server at https://jpssmis.gsfc.nasa.gov/frontmenu_dsp.cfm to verify that this is the correct version prior to use.

LAST PACKET

	PACKET PRIMARY HEADER							User Data Field			
	Verson No.	Packet Identification			Packet Sequence		Packet Length	Science			
		Type Indicator	Sec Hdr Flag	APID	Sequence Flags	Sequence Count		CCD data (end)	HW End Tag	Pad Byte	TOTAL
Bits	3	1	1	11	2	14	16	varies	32	8	varies
Octets	2				2		2	varies	4	1	varies
Value	000	0	0	0x245	10	varies	varies	varies	varies	varies	

Telemetry Packet

Last Packet

Figure 4.3-57. OMPS OMPS Grouped Diagnostic Nadir Profiler Calibration Last Packet Format

FIRST PACKET of a group, but not of the first group

	PACKET PRIMARY HEADER							SECONDARY HEADER			User Data Field				
	Verson No.	Packet Identification			Packet Sequence		Packet Length	Start of Scan	Packets in RDR - 1	Spare	OMPS Header			Science	
		Type Indicator	Sec Hdr Flag	APID	Sequence Flags	Sequence Count					RDR Version	Cont Count -1	Cont Flag	CCD data (middle)	TOTAL
Bits	3	1	1	11	2	14	16	64	8	8	16	8	8	8032	8192
Octets	2				2		2	8	1	1	2	1	1	1004	1024
Value	000	0	1	0x245	01	varies	0x03F9	varies	varies	0x00	varies	varies	varies	varies	

Telemetry Packet

Secondary Header Present

Figure 4.3-58. OMPS Grouped Diagnostic Nadir Profiler Calibration First Packet Format

Check the JPSS MIS Server at https://jpssmis.gsfc.nasa.gov/frontmenu_dsp.cfm to verify that this is the correct version prior to use.

Table 4.3-16. OMPS Diagnostic Nadir Profiler Calibration Packet User Data Fields

Start Bit	Bit Size	Mnemonic Name	Description	Units OR State Value	Conversion Coefficients (formula or C5,C4,C3,C2,C1,C0) OR State Name	Data Type
0	16	CCSDS_RDR_VER	Version Number of RDR	N/A	N/A	U
16	8	CCSDS_CONT_COUNT	Number of segmented CCSDS packet sequences - 1	N/A	N/A	U
24	8	CCSDS_CONT_FLAG	Indicates if this CCSDS packet begins an RDR	N/A	N/A	U
32	8	SENSOR_ID	OMPS Sensor Identification (not for Dwell or FSW Bootup status)	N/A	N/A	U
40	8	FSW_VERSION	Flight Software Version Number (not for Dwell or FSW Bootup status) -- major version	N/A	N/A	U
48	8	FSW_VERSION	Flight Software Version Number (not for Dwell or FSW Bootup status) -- minor version	N/A	N/A	U
56	2	MEB_BOOT_IMG_ID	Boot Image Identifier (not for Dwell or FSW Bootup status)	0 1 2	Not Used As-Launched Modifiable	U
58	5	MEB_SBC_ID	Single Board Computer Identifier (not for Dwell or FSW Bootup status)	N/A	N/A	U
63	1	MEB_SIDE	Active MEB Side (not for Dwell or FSW Bootup status)	0 1	MEB2 MEB1	U
64	8	FSW_INIT_STATUS	Flight Software Initialization Status (not for Dwell or FSW Bootup status)	0 -1	OK ERROR	S
72	8	FSW_INIT_CODE	Flight Software Initialization Code (not for Dwell or FSW Bootup status)	N/A	N/A	U
80	8	FSW_PROTECTED	OMPS Protected State Indicator (not for Dwell or FSW Bootup status)	1 0	PROTECTED UNPROTECTED	U
88	4	MEB_FLASH_PWR	SBC Flash Memory Power State (not for Dwell or FSW Bootup status)	0 1	OFF ON	U
92	4	EEPROM_SIDE	EEPROM side used to boot	0 1	Boot Side 1 Boot Side 2	U
96	7	M_MCR_SPARE6	Unused bits of the Miscellaneous Control Register	N/A	N/A	U
103	1	M_MCR_L_SP_CTRL	Limb Signal Processing Spare Control	0 1	OFF ON	U
104	3	M_MCR_SPARE5	Unused bits of the Miscellaneous Control Register	N/A	N/A	U
107	1	M_MCR_N_SP_CTRL	Nadir Signal Processing Spare Control	0 1	OFF ON	U
108	3	M_MCR_SPARE4	Unused bits of the Miscellaneous Control Register	N/A	N/A	U
111	1	M_MCR_TEST_2	Test connector	0 1	OFF ON	U
112	7	M_MCR_SPARE3	Unused bits of the Miscellaneous Control Register	N/A	N/A	U
119	9	M_CAL_LED_STATE	State of the Calibration LEDs	0 257 272 273	ALL_OFF NADIR_TC_ON NADIR_NP_ON LIMB_ON	U
128	7	M_THCR_SPARE7	Unused bits of the TEC & Heater Control & Status Register	N/A	N/A	U
135	1	M_THCR_DAC_BUSY	State of the DACBUSY line	0 1	NOT_BUSY BUSY	U
136	3	M_THCR_SPARE6	Unused bits of the TEC & Heater Control & Status Register	N/A	N/A	U
139	1	M_TC_TEC_STATE	State of the TC TEC Control	0 1	OFF ON	U
140	3	M_THCR_SPARE5	Unused bits of the TEC & Heater Control & Status Register	N/A	N/A	U
143	1	M_NP_TEC_STATE	State of the NP TEC Control	0 1	OFF ON	U
144	3	M_THCR_SPARE4	Unused bits of the TEC & Heater Control & Status Register	N/A	N/A	U
147	1	M_LP_TEC_STATE	State of the LP TEC Control	0 1	OFF ON	U
148	3	M_THCR_SPARE3	Unused bits of the TEC & Heater Control & Status Register	N/A	N/A	U
151	1	M_TC_HTR_STATE	State of the TC CCD Window Heater Control	0 1	OFF ON	U

Check the JPSS MIS Server at https://jpssmis.gsfc.nasa.gov/frontmenu_dsp.cfm to verify that this is the correct version prior to use.

Start Bit	Bit Size	Mnemonic Name	Description	Units OR State Value	Conversion Coefficients (formula or C5,C4,C3,C2,C1,C0) OR State Name	Data Type
152	3	M_THCR_SPARE2	Unused bits of the TEC & Heater Control & Status Register	N/A	N/A	U
155	1	M_NP_HTR_STATE	State of the NP CCD Window Heater Control	0 1	OFF ON	U
156	3	M_THCR_SPARE1	Unused bits of the TEC & Heater Control & Status Register	N/A	N/A	U
159	1	M_LP_HTR_STATE	State of the LP CCD Window Heater Control	0 1	OFF ON	U
160	1	MEB_LP_HTR_PWR	LP Window Heater Power State	0 1	PWR_ENABLED PWR_DISABLED	U
161	1	MEB_NP_HTR_PWR	NP Window Heater Power State	0 1	PWR_ENABLED PWR_DISABLED	U
162	1	MEB_TC_HTR_PWR	TC Window Heater Power State	0 1	PWR_ENABLED PWR_DISABLED	U
163	1	MEB_LP_TEC_PWR	LP TEC Power State	0 1	PWR_ENABLED PWR_DISABLED	U
164	1	MEB_NP_TEC_PWR	NP TEC Power State	0 1	PWR_ENABLED PWR_DISABLED	U
165	1	MEB_TC_TEC_PWR	TC TEC Power State	0 1	PWR_ENABLED PWR_DISABLED	U
166	1	MEB_L_MTR_RELAY	Limb Motor Relay Position	0 1	CLOSED OPEN	U
167	1	MEB_N_MTR_RELAY	Nadir Motor Relay Position	0 1	CLOSED OPEN	U
168	1	MEB_L_PWR	Limb Power Supply State	0 1	PWR_ENABLED PWR_DISABLED	U
169	1	MEB_N_PWR	Nadir Power Supply State	0 1	PWR_ENABLED PWR_DISABLED	U
170	1	MEB_BOOT_SEL_1	Boot Select Bit 1 Relay Position	0 1	CLOSED OPEN	U
171	1	MEB_BOOT_SEL_0	Boot Select Bit 0 Relay Position	0 1	CLOSED OPEN	U
172	1	MEB_L_CLKDRV_RED	Limb Clock Drive Relay Redundant Position	0 1	ALL_REDUNDANT NOT_REDUNDANT	U
173	1	MEB_L_CLKDRV_PRI	Limb Clock Drive Relay Primary Position	0 1	ALL_PRIMARY NOT_PRIMARY	U
174	1	MEB_N_CLKDRV_RED	Nadir Clock Drive Relay Redundant Position	0 1	ALL_REDUNDANT NOT_REDUNDANT	U
175	1	MEB_N_CLKDRV_PRI	Nadir Clock Drive Relay Primary Position	0 1	ALL_PRIMARY NOT_PRIMARY	U
176	10	M_MCSR_SPARE6	Unused register bits	0 1	OPEN CLOSED	U
186	1	M_L_XMEB_RELAY	Position of Non-Operating MEB Limb Motor Relay	0 1	CLOSED OPEN	U
187	1	M_N_XMEB_RELAY	Position of Non-Operating MEB Nadir Motor Relay	0 1	CLOSED OPEN	U
188	3	M_MCSR_SPARE5	Unused register bits	0 1	OPEN CLOSED	U
191	1	M_MTR_ACTIVE	Motor Control Circuitry Active	0 1	INACTIVE ACTIVE	U
192	3	M_MCSR_SPARE4	Unused register bits	0 1	OPEN CLOSED	U
195	1	M_RELAY_POS	Relay Position	0 1	OPEN CLOSED	U
196	3	M_MCSR_SPARE3	Unused register bits	0 1	OPEN CLOSED	U
199	1	M_MTR_SELECT	Motor Select	0 1	NADIR LIMB	U

Start Bit	Bit Size	Mnemonic Name	Description	Units OR State Value	Conversion Coefficients (formula or C5,C4,C3,C2,C1,C0) OR State Name	Data Type
200	3	M_MCSR_SPARE2	Unused register bits	0 1	OPEN CLOSED	U
203	1	M_RES_ENABLE	Resolver Circuitry Enable	0 1	DISABLED ENABLED	U
204	3	M_MCSR_SPARE1	Unused register bits	0 1	OPEN CLOSED	U
207	1	M_MTR_RES_PWR	Motor and Resolver Power State	0 1	OFF ON	U
208	1	M_N_RESOLV_BUSY	Nadir Resolver Data Register - Busy	0 1	NOT_BUSY BUSY	U
209	15	M_N_RESOLV_SPARE	Nadir Resolver Data Register - Unused Bits	N/A	N/A	U
224	16	M_N_RESOLV_DATA	Nadir Resolver Data Register - Resolver Data	N/A	N/A	U
240	7	M_NMP_SPARE4	Nadir Motor Parameter Register - Unused Bits	0 1	CW CCW	U
247	1	M_N_DIRECTION	Nadir Motor Direction	0 1	CW CCW	U
248	2	M_NMP_SPARE3	Nadir Motor Parameter Register - Unused Bits	0 1	CW CCW	U
250	2	M_N_SPEED	Nadir Motor Speed	0 1 2 3	STEPS_SEC_300 STEPS_SEC_200 STEPS_SEC_100 STEPS_SEC_10	U
252	2	M_NMP_SPARE2	Nadir Motor Parameter Register - Unused Bits	0 1	CW CCW	U
254	2	M_N_PHASE	Nadir Motor Phase	0 1 2 3	INVALID A_MINUS_B_PLUS A_MINUS_B_MINUS A_PLUS_B_MINUS	U
256	4	M_NMP_SPARE1	Nadir Motor Parameter Register - Unused Bits	0 1	CW CCW	U
260	12	M_N_STEP_COUNT	Nadir Motor Step Count	N/A	N/A	U
272	8	M_N_RETRIES	Nadir Motor Retries	N/A	N/A	U
280	16	M_N_DESTINATION	Nadir Diffuser Move Destination	N/A	N/A	U
296	16	M_TC_TEC_SETPT	Commanded TC TEC Setpoint	N/A	N/A	U
312	16	M_TC_HTR_SETPT	Commanded TC CCD Window Heater Setpoint	N/A	N/A	U
328	16	M_NP_TEC_SETPT	Commanded NP TEC Setpoint	N/A	N/A	U
344	16	M_NP_HTR_SETPT	Commanded NP CCD Window Heater Setpoint	N/A	N/A	U
360	16	M_N_POSITION	Nadir Diffuser Motor Position	N/A	N/A	U
376	8	M_N_POS_ID	Nadir Diffuser Position ID	N/A	N/A	U
384	8	N_TIM_PAT_VER	Nadir Active Timing Pattern Table Version Number -- major version	N/A	N/A	U
392	8	N_TIM_PAT_VER	Nadir Active Timing Pattern Table Version Number -- minor version	N/A	N/A	U
400	16	N_IMG_STATUS	Nadir Image Processing Status	N/A	N/A	U
416	32	N_INT_HOLD_TIME	Nadir TPG Integration Hold Time	milliseconds	-, -, -, -, 0.1, 0	U

Check the JPSS MIS Server at https://jpssmis.gsfc.nasa.gov/frontmenu_dsp.cfm to verify that this is the correct version prior to use.

Start Bit	Bit Size	Mnemonic Name	Description	Units OR State Value	Conversion Coefficients (formula or C5,C4,C3,C2,C1,C0) OR State Name	Data Type
448	8	N_PROFILE_ID	Active Nadir Profile ID	N/A	N/A	U
456	8	N_PROFILE_VER	Nadir Imaging Profile Table Version Number -- major version	N/A	N/A	U
464	8	N_PROFILE_VER	Nadir Imaging Profile Table Version Number -- minor version	N/A	N/A	U
472	16	N_TIM_PAT_TBL	Nadir Timing Pattern Table ID	N/A	N/A	U
488	16	TC_APID	Nadir Total Column Application ID	N/A	N/A	U
504	16	NP_APID	Nadir Profiler Application ID	N/A	N/A	U
520	8	TC_LIN_CORR	Nadir Total Column Linearity Correction Flag	0 1	DISABLED ENABLED	U
528	16	TC_LIN_CORR_TBL	Nadir Total Column Linearity Correction Table ID	N/A	N/A	U
544	16	TC_FIXED_COADDS	Nadir Total Column Fixed Coadd Count	N/A	N/A	U
560	8	TC_REORDER_IMG	Nadir Total Column Reorder Image Flag	0 1	DISABLED ENABLED	U
568	8	TC_GAIN_CORR	Nadir Total Column Gain Correction Flag	0 1	DISABLED ENABLED	U
576	16	TC_GAIN_CORR_TBL	Nadir Total Column Gain Correction Table ID	N/A	N/A	U
592	8	TC_BIN_IMG	Nadir Total Column Bin Image Flag	0 1	DISABLED ENABLED	U
600	16	TC_SAMP_TBL	Nadir Total Column Sample Table ID	N/A	N/A	U
616	8	NP_LIN_CORR	Nadir Profiler Linearity Correction Flag	0 1	DISABLED ENABLED	U
624	16	NP_LIN_CORR_TBL	Nadir Profiler Linearity Correction Table ID	N/A	N/A	U
640	16	NP_FIXED_COADDS	Nadir Profiler Fixed Coadd Count	N/A	N/A	U
656	8	NP_REORDER_IMG	Nadir Profilier Reorder Image Flag	0 1	DISABLED ENABLED	U
664	8	NP_GAIN_CORR	Nadir Profilier Gain Correction Flag	0 1	DISABLED ENABLED	U
672	16	NP_GAIN_CORR_TBL	Nadir Profilier Gain Correction Table ID	N/A	N/A	U
688	8	NP_BIN_IMG	Nadir Profilier Bin Image Flag	0 1	DISABLED ENABLED	U
696	16	NP_SAMP_TBL	Nadir Profilier Sample Table ID	N/A	N/A	U
712	8	TC_GAIN_TBL_VER	Nadir Total Column Gain Table Version -- major version	N/A	N/A	U
720	8	TC_GAIN_TBL_VER	Nadir Total Column Gain Table Version -- minor version	N/A	N/A	U
728	8	NP_GAIN_TBL_VER	Nadir Profiler Gain Table Version -- major version	N/A	N/A	U
736	8	NP_GAIN_TBL_VER	Nadir Profiler Gain Table Version -- minor version	N/A	N/A	U
744	8	TC_LIN_TBL_VER	Nadir Total Column Linearity Table Version -- major version	N/A	N/A	U
752	8	TC_LIN_TBL_VER	Nadir Total Column Linearity Table Version -- minor version	N/A	N/A	U
760	8	NP_LIN_TBL_VER	Nadir Profiler Linearity Table Version -- major version	N/A	N/A	U
768	8	NP_LIN_TBL_VER	Nadir Profiler Linearity Table Version -- minor version	N/A	N/A	U
776	8	TC_SAMP_TBL_VER	Nadir Total Column Sample Table Version -- major version	N/A	N/A	U
784	8	TC_SAMP_TBL_VER	Nadir Total Column Sample Table Version -- minor version	N/A	N/A	U
792	8	NP_SAMP_TBL_VER	Nadir Profiler Sample Table Version -- major version	N/A	N/A	U
800	8	NP_SAMP_TBL_VER	Nadir Profiler Sample Table Version -- minor version	N/A	N/A	U

Start Bit	Bit Size	Mnemonic Name	Description	Units OR State Value	Conversion Coefficients (formula or C5,C4,C3,C2,C1,C0) OR State Name	Data Type
808	16	NP_ROWS	Rows of Nadir Total Column CCD data	N/A	N/A	U
824	16	NP_COLS	Columns of Nadir Total Column CCD data	N/A	N/A	U
840	16	NP_LAST_IMG_DOY	Time stamp of last good TC image (day of year)	N/A	N/A	U
856	32	NP_LAST_IMG_MSEC	Time stamp of last good TC image	milliseconds	N/A	U
888	16	NP_LAST_IMG_USEC	Time stamp of last good TC image	microseconds	N/A	U
904	16	M_I_CAL_LED	Current in the active Calibration LED	milliamps	-, -, -, -, 0.006125, 0	S
920	16	M_T_MTR_DRV_BD	Temperature - Motor Driver Board	Celsius	-, -, -, -, 0.0486, -273.15	S
936	16	N_T_TELESCOPE	Temperature - Nadir Telescope	Celsius	-32768 to 83: -, -, -8.469E-5, 0.02033, -1.99, 128.8 84 to 343: -, -, -1.465E-6, 0.001323, -0.4741, 86.11 344 to 1795: -, -, -1.044E-8, 4.681E-5, -0.08272, 43.02 1796 to 32767: -, -, -9.53E-11, 1.817E-6, -0.01566, 7.7	S
952	16	TC_T_CCD	Temperature - Nadir Total Column CCD	Celsius	-, -, -, -, -0.0238, 58.05	S
968	16	NP_T_CCD	Temperature - Nadir Profiler CCD	Celsius	-, -, -, -, -0.0238, 58.05	S
984	16	M_V_MTR_RES_5V	Voltage - Motor/Resolver Electronics +5V	Volts	-, -, -, -, 0.000949, 0	S
1000	16	M_V_RES_12V	Voltage - Resolver Electronics +12V	Volts	-, -, -, -, 0.00311, 0	S
1016	16	M_V_RES_M12V	Voltage - Resolver Electronics -12V	Volts	-, -, -, -, 0.00311, 0	S
1032	16	N_T_MOTOR	Temperature - Nadir Diffuser Motor	Celsius	-32768 to 83: -, -, -8.469E-5, 0.02033, -1.99, 128.8 84 to 343: -, -, -1.465E-6, 0.001323, -0.4741, 86.11 344 to 1795: -, -, -1.044E-8, 4.681E-5, -0.08272, 43.02 1796 to 32767: -, -, -9.53E-11, 1.817E-6, -0.01566, 7.7	S
1048	16	N_T_HOUSING	Temperature - Nadir Calibration Housing	Celsius	-32768 to 83: -, -, -8.469E-5, 0.02033, -1.99, 128.8 84 to 343: -, -, -1.465E-6, 0.001323, -0.4741, 86.11 344 to 1795: -, -, -1.044E-8, 4.681E-5, -0.08272, 43.02 1796 to 32767: -, -, -9.53E-11, 1.817E-6, -0.01566, 7.7	S
1064	16	N_T_SUN_SIDE	Temperature - Nadir Sun Side	Celsius	-32768 to 83: -, -, -8.469E-5, 0.02033, -1.99, 128.8 84 to 343: -, -, -1.465E-6, 0.001323, -0.4741, 86.11 344 to 1795: -, -, -1.044E-8, 4.681E-5, -0.08272, 43.02 1796 to 32767: -, -, -9.53E-11, 1.817E-6, -0.01566, 7.7	S
1080	16	N_T_DARK_SIDE	Temperature - Nadir Dark Side	Celsius	-32768 to 83: -, -, -8.469E-5, 0.02033, -1.99, 128.8 84 to 343: -, -, -1.465E-6, 0.001323, -0.4741, 86.11 344 to 1795: -, -, -1.044E-8, 4.681E-5, -0.08272, 43.02 1796 to 32767: -, -, -9.53E-11, 1.817E-6, -0.01566, 7.7	S
1096	16	TC_T_COND_BAR	Temperature - TC Conductor Bar	Celsius	-32768 to 83: -, -, -8.469E-5, 0.02033, -1.99, 128.8 84 to 343: -, -, -1.465E-6, 0.001323, -0.4741, 86.11 344 to 1795: -, -, -1.044E-8, 4.681E-5, -0.08272, 43.02 1796 to 32767: -, -, -9.53E-11, 1.817E-6, -0.01566, 7.7	S
1112	16	NP_T_COND_BAR	Temperature - NP Conductor Bar	Celsius	-32768 to 83: -, -, -8.469E-5, 0.02033, -1.99, 128.8 84 to 343: -, -, -1.465E-6, 0.001323, -0.4741, 86.11 344 to 1795: -, -, -1.044E-8, 4.681E-5, -0.08272, 43.02 1796 to 32767: -, -, -9.53E-11, 1.817E-6, -0.01566, 7.7	S
1128	16	TC_P_HTR_SET	Power Setpoint - TC Window Heater	Watts	-, -, -, 5.76E-8, 0, 0	
1144	16	NP_P_HTR_SET	Power Setpoint - NP Window Heater	Watts	-, -, -, 5.76E-8, 0, 0	S
1160	16	N_T_SIG_BD	Temperature - Nadir Signal Board	Celsius	-, -, -, -, 0.1233, -273.15	S
1176	16	N_T_TIM_BD	Temperature - Nadir Timing Board	Celsius	-, -, -, -, 0.0486, -273.15	S
1192	16	TC_T_HOUSING	Temperature - TC Housing.	Celsius	-32768 to 83: -, -, -8.469E-5, 0.02033, -1.99, 128.8 84 to 343: -, -, -1.465E-6, 0.001323, -0.4741, 86.11 344 to 1795: -, -, -1.044E-8, 4.681E-5, -0.08272, 43.02 1796 to 32767: -, -, -9.53E-11, 1.817E-6, -0.01566, 7.7	S
1208	16	NP_T_WINDOW	Temperature - NP Window	Celsius	-, -, -, -, 0.0483, -273.15	S
1224	16	TC_T_WINDOW	Temperature - TC Window	Celsius	-, -, -, -, 0.0483, -273.15	S
1240	32	N/A	HW Start Tag (if image is not sampled)	N/A	N/A	U
varies	varies	N/A	CCD Data (# pixels x 32 bits/pixel)	N/A	N/A	U
varies	32	N/A	HW End Tag (if image is not sampled)	N/A	N/A	U
varies	8	N/A	Pad Byte	N/A	N/A	U

4.3.5.7 Diagnostic Limb Profiler Calibration

The Diagnostic Limb Profiler Calibration packet is output in APID 582 when requested in order to facilitate sensor performance and calibration investigations. The User Data Field contains the OMPS Header, OMPS engineering data and the CCD Data. The size of the CCD Data is configurable with a maximum of 364 x 780 pixels. If all the CCD pixels are sent unbinned, five grouped APID 582 packets are required. Each of the five packets is a grouped packet. Only the first of the five grouped packets contains the engineering data. The first CCSDS packet of each of the five groups contains a secondary header and the OMPS header.

Because the size of APID 582 is configurable, Figure 4.3-59 OMPS Ungrouped Diagnostic Limb Profiler Calibration Packet Format to Figure 4.3-63 Figure 4.3 63 OMPS Grouped Diagnostic Limb Profiler Calibration First Packet Format below show the packet structure of a standalone diagnostic packet, the first packet of the first grouped packet, the middle and last of the grouped packets and the first packet of any but the first group of packets. These figures give a good indication of the structure but are not meant to be a comprehensive presentation of every configuration of the multiple grouped packets. Table 4.3-17 lists the user data fields as if multiple groups of packets were unnecessary.

Generic Standalone

	PACKET PRIMARY HEADER							SECONDARY HEADER			User Data Field								
	Verson No.	Packet Identification			Packet Sequence		Packet Length	Start of Scan	Packets in RDR - 1	Spare	OMPS Header			Engineering Data	Science				
		Type Indicator	Sec Hdr Flag	APID	Sequence Flags	Sequence Count					RDR Version	Cont Count -1	Cont Flag	Engineering Data Sections	HW Start Tag	CCD data	HW End Tag	Pad Byte	TOTAL
Bits	3	1	1	11	2	14	16	64	8	8	16	8	8	1096	32	varies	32	8	varies
Octets	2				2		2	8	1	1	2	1	1	137	4	varies	4	1	varies
Value	000	0	1	0x246	01	varies	varies	varies	0x00	0x00	varies	varies	varies	varies	varies	varies	varies	varies	

Telemetry Packet

Secondary Header Present

Engineering Data												
Sensor_Info (7)	Mech_SD (59)	Mech_Limb (63)	Mech_Limb (72)	Limb_SD (65)	Limb_IMG_Profile_SD (51)	Limb_1st_SD (49)	Limb_2nd_SD (67)	Curr_LED_SD (26)	Temp_Mech_SD (30)	Temp_Limb_SD (29)	Volt_Mech_SD (42)	Temp_Limb (25)
64	112	88	56	96	264	64	64	16	16	64	48	144
8	14	11	7	12	33	8	8	2	2	8	6	18
varies	varies	varies	varies	varies	varies	varies	varies	varies	varies	varies	varies	varies

Figure 4.3-59. OMPS Ungrouped Diagnostic Limb Profiler Calibration Packet Format

FIRST PACKET

	PACKET PRIMARY HEADER							SECONDARY HEADER			User Data Field						
	Verson No.	Packet Identification			Packet Sequence		Packet Length	Start of Scan	Packets in RDR - 1	Spare	OMPS Header			Engineering Data	Science		
		Type Indicator	Sec Hdr Flag	APID	Sequence Flags	Sequence Count					RDR Version	Cont Count -1	Cont Flag	Engineering Data Sections	HW Start Tag	CCD data (start)	TOTAL
Bits	3	1	1	11	2	14	16	64	8	8	16	8	8	1096	32	6904	8192
Octets	2				2		2	8	1	1	2	1	1	137	4	863	1024
Value	000	0	1	0x246	01	varies	0x03F9	varies	varies	0x0	varies	varies	varies	varies	varies	varies	

Telemetry Packet

Secondary Header Present

	Engineering Data												
	Sensor_Info (7)	Mech_SD (59)	Mech_Limb (63)	Mech_Limb (72)	Limb_SD (65)	Limb_IMG_Profile_SD (51)	Limb_1st_SD (49)	Limb_2nd_SD (67)	Curr_LED_SD (26)	Temp_Mech_SD (30)	Temp_Limb_SD (29)	Volt_Mech_SD (42)	Temp_Limb (25)
	64	112	88	56	96	264	64	64	16	16	64	48	144
	8	14	11	7	12	33	8	8	2	2	8	6	18
	varies	varies	varies	varies	varies	varies	varies	varies	varies	varies	varies	varies	varies

Figure 4.3-60. OMPS First Grouped Diagnostic Limb Profiler Calibration First Packet Format

MIDDLE PACKET

	PACKET PRIMARY HEADER							User Data Field	
	Verson No.	Packet Identification			Packet Sequence		Packet Length	Science	
		Type Indicator	Sec Hdr Flag	APID	Sequence Flags	Sequence Count		CCD data (middle)	TOTAL
Bits	3	1	1	11	2	14	16	8144	8192
Octets	2				2		2	1018	1024
Value	000	0	0	0x246	00	varies	0x03F9	varies	

Telemetry Packet

Middle Packet

Figure 4.3-61. OMPS Grouped Diagnostic Limb Profiler Calibration Middle Packet Format

Check the JPSS MIS Server at https://jpssmis.gsfc.nasa.gov/frontmenu_dsp.cfm to verify that this is the correct version prior to use.

LAST PACKET

	PACKET PRIMARY HEADER							User Data Field			
	Verson No.	Packet Identification			Packet Sequence		Packet Length	Science			
		Type Indicator	Sec Hdr Flag	APID	Sequence Flags	Sequence Count		CCD data (end)	HW End Tag	Pad Byte	TOTAL
Bits	3	1	1	11	2	14	16	varies	32	8	varies
Octets	2				2		2	varies	4	1	varies
Value	000	0	0	0x246	10	varies	varies	varies	varies	varies	

Telemetry Packet

Last Packet

Figure 4.3-62. OMPS Grouped Diagnostic Limb Profiler Calibration Last Packet Format

FIRST PACKET of a group, but not of the f

	PACKET PRIMARY HEADER							SECONDARY HEADER			User Data Field				
	Verson No.	Packet Identification			Packet Sequence		Packet Length	Start of Scan	Packets in RDR - 1	Spare	OMPS Header			Science	
		Type Indicator	Sec Hdr Flag	APID	Sequence Flags	Sequence Count					RDR Version	Cont Count -1	Cont Flag	CCD data (middle)	TOTAL
Bits	3	1	1	11	2	14	16	64	8	8	16	8	8	8032	8192
Octets	2				2		2	8	1	1	2	1	1	1004	1024
Value	000	0	1	0x246	01	varies	0x03F9	varies	varies	0x00	varies	varies	varies	varies	

Telemetry Packet

Secondary Header Present

Figure 4.3-63. OMPS Grouped Diagnostic Limb Profiler Calibration First Packet Format

Check the JPSS MIS Server at https://jpssmis.gsfc.nasa.gov/frontmenu_dsp.cfm to verify that this is the correct version prior to use.

Table 4.3-17. OMPS Diagnostic Limb Profiler Calibration Packet User Data Field

Start Bit	Bit Size	Mnemonic Name	Description	Units OR State Value	Conversion Coefficients (formula or C5,C4,C3,C2,C1,C0) OR State Name	Data Type
0	16	CCSDS_RDR_VER	Version Number of RDR	N/A	N/A	U
16	8	CCSDS_CONT_COUNT	Number of segmented CCSDS packet sequences - 1	N/A	N/A	U
24	8	CCSDS_CONT_FLAG	Indicates if this CCSDS packet begins an RDR	N/A	N/A	U
32	8	SENSOR_ID	OMPS Sensor Identification (not for Dwell or FSW Bootup status)	N/A	N/A	U
40	8	FSW_VERSION	Flight Software Version Number (not for Dwell or FSW Bootup status) -- major version	N/A	N/A	U
48	8	FSW_VERSION	Flight Software Version Number (not for Dwell or FSW Bootup status) -- minor version	N/A	N/A	U
56	2	MEB_BOOT_IMG_ID	Boot Image Identifier (not for Dwell or FSW Bootup status)	0 1 2	Not Used As-Launched Modifiable	U
58	5	MEB_SBC_ID	Single Board Computer Identifier (not for Dwell or FSW Bootup status)	N/A	N/A	U
63	1	MEB_SIDE	Active MEB Side (not for Dwell or FSW Bootup status)	0 1	MEB2 MEB1	U
64	8	FSW_INIT_STATUS	Flight Software Initialization Status (not for Dwell or FSW Bootup status)	0 -1	OK ERROR	S
72	8	FSW_INIT_CODE	Flight Software Initialization Code (not for Dwell or FSW Bootup status)	N/A	N/A	U
80	8	FSW_PROTECTED	OMPS Protected State Indicator (not for Dwell or FSW Bootup status)	1 0	PROTECTED UNPROTECTED	U
88	4	MEB_FLASH_PWR	SBC Flash Memory Power State (not for Dwell or FSW Bootup status)	0 1	OFF ON	U
92	4	EEPROM_SIDE	EEPROM side used to boot	0 1	Boot Side 1 Boot Side 2	U
96	7	M_MCR_SPARE6	Unused bits of the Miscellaneous Control Register	N/A	N/A	U
103	1	M_MCR_L_SP_CTRL	Limb Signal Processing Spare Control	0 1	OFF ON	U
104	3	M_MCR_SPARE5	Unused bits of the Miscellaneous Control Register	N/A	N/A	U
107	1	M_MCR_N_SP_CTRL	Nadir Signal Processing Spare Control	0 1	OFF ON	U
108	3	M_MCR_SPARE4	Unused bits of the Miscellaneous Control Register	N/A	N/A	U
111	1	M_MCR_TEST_2	Test connector	0 1	OFF ON	U
112	7	M_MCR_SPARE3	Unused bits of the Miscellaneous Control Register	N/A	N/A	U
119	9	M_CAL_LED_STATE	State of the Calibration LEDs	0 257 272 273	ALL_OFF NADIR_TC_ON NADIR_NP_ON LIMB_ON	U
128	7	M_THCR_SPARE7	Unused bits of the TEC & Heater Control & Status Register	N/A	N/A	U
135	1	M_THCR_DAC_BUSY	State of the DACBUSY line	0 1	NOT_BUSY BUSY	U
136	3	M_THCR_SPARE6	Unused bits of the TEC & Heater Control & Status Register	N/A	N/A	U
139	1	M_TC_TEC_STATE	State of the TC TEC Control	0 1	OFF ON	U
140	3	M_THCR_SPARE5	Unused bits of the TEC & Heater Control & Status Register	N/A	N/A	U
143	1	M_NP_TEC_STATE	State of the NP TEC Control	0 1	OFF ON	U
144	3	M_THCR_SPARE4	Unused bits of the TEC & Heater Control & Status Register	N/A	N/A	U
147	1	M_LP_TEC_STATE	State of the LP TEC Control	0 1	OFF ON	U
148	3	M_THCR_SPARE3	Unused bits of the TEC & Heater Control & Status Register	N/A	N/A	U
151	1	M_TC_HTR_STATE	State of the TC CCD Window Heater Control	0 1	OFF ON	U

Check the JPSS MIS Server at https://jpssmis.gsfc.nasa.gov/frontmenu_dsp.cfm to verify that this is the correct version prior to use.

Start Bit	Bit Size	Mnemonic Name	Description	Units OR State Value	Conversion Coefficients (formula or C5,C4,C3,C2,C1,C0) OR State Name	Data Type
152	3	M_THCR_SPARE2	Unused bits of the TEC & Heater Control & Status Register	N/A	N/A	U
155	1	M_NP_HTR_STATE	State of the NP CCD Window Heater Control	0 1	OFF ON	U
156	3	M_THCR_SPARE1	Unused bits of the TEC & Heater Control & Status Register	N/A	N/A	U
159	1	M_LP_HTR_STATE	State of the LP CCD Window Heater Control	0 1	OFF ON	U
160	1	MEB_LP_HTR_PWR	LP Window Heater Power State	0 1	PWR_ENABLED PWR_DISABLED	U
161	1	MEB_NP_HTR_PWR	NP Window Heater Power State	0 1	PWR_ENABLED PWR_DISABLED	U
162	1	MEB_TC_HTR_PWR	TC Window Heater Power State	0 1	PWR_ENABLED PWR_DISABLED	U
163	1	MEB_LP_TEC_PWR	LP TEC Power State	0 1	PWR_ENABLED PWR_DISABLED	U
164	1	MEB_NP_TEC_PWR	NP TEC Power State	0 1	PWR_ENABLED PWR_DISABLED	U
165	1	MEB_TC_TEC_PWR	TC TEC Power State	0 1	PWR_ENABLED PWR_DISABLED	U
166	1	MEB_L_MTR_RELAY	Limb Motor Relay Position	0 1	CLOSED OPEN	U
167	1	MEB_N_MTR_RELAY	Nadir Motor Relay Position	0 1	CLOSED OPEN	U
168	1	MEB_L_PWR	Limb Power Supply State	0 1	PWR_ENABLED PWR_DISABLED	U
169	1	MEB_N_PWR	Nadir Power Supply State	0 1	PWR_ENABLED PWR_DISABLED	U
170	1	MEB_BOOT_SEL_1	Boot Select Bit 1 Relay Position	0 1	CLOSED OPEN	U
171	1	MEB_BOOT_SEL_0	Boot Select Bit 0 Relay Position	0 1	CLOSED OPEN	U
172	1	MEB_L_CLKDRV_RED	Limb Clock Drive Relay Redundant Position	0 1	ALL_REDUNDANT NOT_REDUNDANT	U
173	1	MEB_L_CLKDRV_PRI	Limb Clock Drive Relay Primary Position	0 1	ALL_PRIMARY NOT_PRIMARY	U
174	1	MEB_N_CLKDRV_RED	Nadir Clock Drive Relay Redundant Position	0 1	ALL_REDUNDANT NOT_REDUNDANT	U
175	1	MEB_N_CLKDRV_PRI	Nadir Clock Drive Relay Primary Position	0 1	ALL_PRIMARY NOT_PRIMARY	U
176	10	M_MCSR_SPARE6	Unused register bits	0 1	OPEN CLOSED	U
186	1	M_L_XMEB_RELAY	Position of Non-Operating MEB Limb Motor Relay	0 1	CLOSED OPEN	U
187	1	M_N_XMEB_RELAY	Position of Non-Operating MEB Nadir Motor Relay	0 1	CLOSED OPEN	U
188	3	M_MCSR_SPARE5	Unused register bits	0 1	OPEN CLOSED	U
191	1	M_MTR_ACTIVE	Motor Control Circuitry Active	0 1	INACTIVE ACTIVE	U
192	3	M_MCSR_SPARE4	Unused register bits	0 1	OPEN CLOSED	U
195	1	M_RELAY_POS	Relay Position	0 1	OPEN CLOSED	U
196	3	M_MCSR_SPARE3	Unused register bits	0 1	OPEN CLOSED	U
199	1	M_MTR_SELECT	Motor Select	0 1	NADIR LIMB	U

Check the JPSS MIS Server at https://jpssmis.gsfc.nasa.gov/frontmenu_dsp.cfm to verify that this is the correct version prior to use.

Start Bit	Bit Size	Mnemonic Name	Description	Units OR State Value	Conversion Coefficients (formula or C5,C4,C3,C2,C1,C0) OR State Name	Data Type
200	3	M_MCSR_SPARE2	Unused register bits	0 1	OPEN CLOSED	U
203	1	M_RES_ENABLE	Resolver Circuitry Enable	0 1	DISABLED ENABLED	U
204	3	M_MCSR_SPARE1	Unused register bits	0 1	OPEN CLOSED	U
207	1	M_MTR_RES_PWR	Motor and Resolver Power State	0 1	OFF ON	U
208	1	M_L_RESOLV_BUSY	Limb Resolver Data Register - Busy	0 1	NOT_BUSY BUSY	U
209	15	M_L_RESOLV_SPARE	Limb Resolver Data Register - Unused Bits	N/A	N/A	U
224	16	M_L_RESOLV_DATA	Limb Resolver Data Register - Resolver Data	N/A	N/A	U
240	7	M_LMP_SPARE4	Limb Motor Parameter Register - Unused Bits	0 1	CW CCW	U
247	1	M_L_DIRECTION	Limb Motor Direction	0 1	CW CCW	U
248	2	M_LMP_SPARE3	Limb Motor Parameter Register - Unused Bits	0 1	CW CCW	U
250	2	M_L_SPEED	Limb Motor Speed	0 1 2 3	STEPS_SEC_300 STEPS_SEC_200 STEPS_SEC_100 STEPS_SEC_10	U
252	2	M_LMP_SPARE2	Limb Motor Parameter Register - Unused Bits	0 1	CW CCW	U
254	2	M_L_PHASE	Limb Motor Phase	0 1 2 3	INVALID A_MINUS_B_PLUS A_MINUS_B_MINUS A_PLUS_B_MINUS	U
256	4	M_LMP_SPARE1	Limb Motor Parameter Register - Unused Bits	0 1	CW CCW	U
260	12	M_L_STEP_COUNT	Limb Motor Step Count	N/A	N/A	U
272	8	M_L_RETRIES	Limb Motor Retries	N/A	N/A	U
280	16	M_L_DESTINATION	Limb Diffuser Move Destination	N/A	N/A	U
296	16	M_LP_TEC_SETPT	Commanded LP TEC Setpoint	N/A	N/A	U
312	16	M_LP_HTR_SETPT	Commanded LP CCD Window Heater Setpoint	N/A	N/A	U
328	16	M_L_POSITION	Limb Diffuser Motor Position	N/A	N/A	U
344	8	M_L_POS_ID	Limb Diffuser Position ID	N/A	N/A	U
352	8	L_TIM_PAT_VER	Limb Active Timing Pattern Table Version Number -- major version	N/A	N/A	U
360	8	L_TIM_PAT_VER	Limb Active Timing Pattern Table Version Number -- minor version	N/A	N/A	U
368	16	L_ROWS	Rows of Limb Profiler CCD data	N/A	N/A	U
384	16	L_COLS	Columns of Limb Profiler CCD data	N/A	N/A	U
400	16	L_IMG_STATUS	Limb Image Processing Status Word	N/A	N/A	U
416	32	L_INT_HOLD_TIME	Limb TPG Integration Hold Time	milliseconds	-, -, -, -, 0.1, 0	U

Start Bit	Bit Size	Mnemonic Name	Description	Units OR State Value	Conversion Coefficients (formula or C5,C4,C3,C2,C1,C0) OR State Name	Data Type
448	8	L_PROFILE_ID	Active Limb Profile ID	N/A	N/A	U
456	8	L_PROFILE_VER	Limb Imaging Profile Table Version Number -- major version	N/A	N/A	U
464	8	L_PROFILE_VER	Limb Imaging Profile Table Version Number -- minor version	N/A	N/A	U
472	16	L_TIM_PAT_TBL	Limb Timing Pattern Table ID	N/A	N/A	U
488	16	L1_APID	Limb Profiler Image #1 Application ID	N/A	N/A	U
504	16	L2_APID	Limb Profiler Image #2 Application ID	N/A	N/A	U
520	8	L_LIN_CORR	Limb Linearity Correction Flag	0 1	DISABLED ENABLED	U
528	16	L_LIN_CORR_TBL	Limb Linearity Correction Table ID	N/A	N/A	U
544	16	L_FIXED_COADDS	Limb Fixed Coadd Count	N/A	N/A	U
560	8	L_REORDER_IMG	Limb Reorder Image Flag	0 1	DISABLED ENABLED	U
568	8	L_GAIN_CORR	Limb Gain Correction Flag	0 1	DISABLED ENABLED	U
576	16	L_GAIN_CORR_TBL	Limb Gain Correction Table ID	N/A	N/A	U
592	8	L1_BIN_IMG	Limb Profiler Image #1 Bin Image Flag	0 1	DISABLED ENABLED	U
600	16	L1_SAMP_TBL	Limb Profiler Image #1 Sample Table ID	N/A	N/A	U
616	8	L2_BIN_IMG	Limb Profiler Image #2 Bin Image Flag	0 1	DISABLED ENABLED	U
624	16	L2_SAMP_TBL	Limb Profiler Image #2 Sample Table ID	N/A	N/A	U
640	8	L_2ND_IMAGE	Limb Profiler Second Image Flag	0 1	FALSE TRUE	U
648	8	L_GAIN_TBL_VER	Limb Gain Table Version Number -- major version	N/A	N/A	U
656	8	L_GAIN_TBL_VER	Limb Gain Table Version Number -- minor version	N/A	N/A	U
664	8	L_LIN_TBL_VER	Limb Linearity Correction Table Version Number -- major version	N/A	N/A	U
672	8	L_LIN_TBL_VER	Limb Linearity Correction Table Version Number -- minor version	N/A	N/A	U
680	8	L1_SAMP_TBL_VER	Limb Image #1 Sample Table Version Number -- major version	N/A	N/A	U
688	8	L1_SAMP_TBL_VER	Limb Image #1 Sample Table Version Number -- minor version	N/A	N/A	U
696	8	L2_SAMP_TBL_VER	Limb Image #2 Sample Table Version Number -- major version	N/A	N/A	U
704	8	L2_SAMP_TBL_VER	Limb Image #2 Sample Table Version Number -- minor version	N/A	N/A	U

Check the JPSS MIS Server at https://jpssmis.gsfc.nasa.gov/frontmenu_dsp.cfm to verify that this is the correct version prior to use.

Start Bit	Bit Size	Mnemonic Name	Description	Units OR State Value	Conversion Coefficients (formula or C5,C4,C3,C2,C1,C0) OR State Name	Data Type
712	16	L1_LAST_IMG_DOY	Time stamp of last good Limb Image #1 (day of year)	N/A	N/A	U
728	32	L1_LAST_IMG_MSEC	Time stamp of last good Limb Image #1	milliseconds	N/A	U
760	16	L1_LAST_IMG_USEC	Time stamp of last good Limb Image #1	microseconds	N/A	U
776	16	L2_LAST_IMG_DOY	Time stamp of last good Limb Image #2 (day of year)	N/A	N/A	U
792	32	L2_LAST_IMG_MSEC	Time stamp of last good Limb Image #2	milliseconds	N/A	U
824	16	L2_LAST_IMG_USEC	Time stamp of last good Limb Image #2	microseconds	N/A	U
840	16	M_I_CAL_LED	Current in the active Calibration LED	milliamps	-, -, -, -, 0.006125, 0	S
856	16	M_T_MTR_DRV_BD	Temperature - Motor Driver Board	Celsius	-, -, -, -, 0.0486, -273.15	S
872	16	L_T_TELESCOPE	Temperature - Limb Telescope	Celsius	-32768 to 83: -, -, -8.469E-5, 0.02033, -1.99, 128.8 84 to 343: -, -, -1.465E-6, 0.001323, -0.4741, 86.11 344 to 1795: -, -, -1.044E-8, 4.681E-5, -0.08272, 43.02 1796 to 32767: -, -, -9.53E-11, 1.817E-6, -0.01566, 7.7	S
888	16	L_T_PRISM_1	Temperature - Limb Prism #1	Celsius	-32768 to 83: -, -, -8.469E-5, 0.02033, -1.99, 128.8 84 to 343: -, -, -1.465E-6, 0.001323, -0.4741, 86.11 344 to 1795: -, -, -1.044E-8, 4.681E-5, -0.08272, 43.02 1796 to 32767: -, -, -9.53E-11, 1.817E-6, -0.01566, 7.7	S
904	16	L_T_PRISM_2	Temperature - Limb Prism #2	Celsius	-32768 to 83: -, -, -8.469E-5, 0.02033, -1.99, 128.8 84 to 343: -, -, -1.465E-6, 0.001323, -0.4741, 86.11 344 to 1795: -, -, -1.044E-8, 4.681E-5, -0.08272, 43.02 1796 to 32767: -, -, -9.53E-11, 1.817E-6, -0.01566, 7.7	S
920	16	L_T_CCD	Temperature - Limb CCD	Celsius	-, -, -, -, -0.0238, 58.05	S
936	16	M_V_MTR_RES_5V	Voltage - Motor/Resolver Electronics +5V	Volts	-, -, -, -, 0.000949, 0	S
952	16	M_V_RES_12V	Voltage - Resolver Electronics +12V	Volts	-, -, -, -, 0.00311, 0	S
968	16	M_V_RES_M12V	Voltage - Resolver Electronics -12V	Volts	-, -, -, -, 0.00311, 0	S
984	16	L_T_MOTOR	Temperature - Limb Diffuser Motor	Celsius	-32768 to 83: -, -, -8.469E-5, 0.02033, -1.99, 128.8 84 to 343: -, -, -1.465E-6, 0.001323, -0.4741, 86.11 344 to 1795: -, -, -1.044E-8, 4.681E-5, -0.08272, 43.02 1796 to 32767: -, -, -9.53E-11, 1.817E-6, -0.01566, 7.7	S
1000	16	L_T_HOUSING	Temperature - Limb Housing	Celsius	-32768 to 83: -, -, -8.469E-5, 0.02033, -1.99, 128.8 84 to 343: -, -, -1.465E-6, 0.001323, -0.4741, 86.11 344 to 1795: -, -, -1.044E-8, 4.681E-5, -0.08272, 43.02 1796 to 32767: -, -, -9.53E-11, 1.817E-6, -0.01566, 7.7	S
1016	16	L_T_SUN_SIDE	Temperature - Limb Sun Side	Celsius	-32768 to 83: -, -, -8.469E-5, 0.02033, -1.99, 128.8 84 to 343: -, -, -1.465E-6, 0.001323, -0.4741, 86.11 344 to 1795: -, -, -1.044E-8, 4.681E-5, -0.08272, 43.02 1796 to 32767: -, -, -9.53E-11, 1.817E-6, -0.01566, 7.7	S
1032	16	L_T_DARK_SIDE	Temperature - Limb Dark Side	Celsius	-32768 to 83: -, -, -8.469E-5, 0.02033, -1.99, 128.8 84 to 343: -, -, -1.465E-6, 0.001323, -0.4741, 86.11 344 to 1795: -, -, -1.044E-8, 4.681E-5, -0.08272, 43.02 1796 to 32767: -, -, -9.53E-11, 1.817E-6, -0.01566, 7.7	S
1048	16	L_T_COND_BAR	Temperature - Limb Conductor Bar	Celsius	-32768 to 83: -, -, -8.469E-5, 0.02033, -1.99, 128.8 84 to 343: -, -, -1.465E-6, 0.001323, -0.4741, 86.11 344 to 1795: -, -, -1.044E-8, 4.681E-5, -0.08272, 43.02 1796 to 32767: -, -, -9.53E-11, 1.817E-6, -0.01566, 7.7	S
1064	16	L_T_WINDOW	Temperature - Limb Window	Celsius	-, -, -, -, 0.0483, -273.15	S
1080	16	L_P_HTR_SET	Power Setpoint - Limb CCD Window Heater	Watts	-, -, -, 5.76E-8, 0 ,0	S
1096	16	L_T_SIG_BD	Temperature - Nadir Signal Board	Celsius	-, -, -, -, 0.0486, -273.15	S
1112	16	L_T_TIM_BD	Temperature - Nadir Timing Board	Celsius	-, -, -, -, 0.0486, -273.15	S
1128	32	N/A	HW Start Tag (if image is not sampled)	N/A	N/A	U
varies	varies	N/A	CCD Data (# pixels x 32 bits/pixel)	N/A	N/A	U
varies	32	N/A	HW End Tag (if image is not sampled)	N/A	N/A	U
varies	8	N/A	Pad Byte	N/A	N/A	U

Check the JPSS MIS Server at https://jpssmis.gsfc.nasa.gov/frontmenu_dsp.cfm to verify that this is the correct version prior to use.

4.3.6 Dwell Data

The OMPS can be commanded to produce a packet with dwell telemetry once per second. Each dwell packet contains 16 telemetry points sampled at the same rate that engineering data are collected but output more often than engineering data. The OMPS Dwell Telemetry packet, APID 549, has a fixed length of 244 octets. The structure of APID 549 is illustrated in Figure 4.3-64 Figure 4.3 64 OMPS Dwell Packet Format 4.3-55 and the user data fields are listed in Table 4.3-18.

OMPS Dwell Telemetry RDR **VERSION 6.6 DATE: 10/12/2004**

	PACKET PRIMARY HEADER							SECONDARY HEADER			User Data Field											
	Verson No.	Packet Identification			Packet Sequence		Packet Length	Start of Scan	Packets in RDR -1	Spare	OMPS Header			Dwell Point #1				Dwell Point 2-15			Dwell Point 16	
		Type Indicator	Sec Hdr Flag	APID	Sequence Flags	Sequence Count					RDR Version	Cont Count -1	Cont Flag	DWL_01_TBL_ID	DWL_01_OFFSET	DWL_01_ADDR	DWL_01_VALUE	DWL_##_****			DWL_16_****	
Bits	3	1	1	11	2	14	16	64	8	8	16	8	8	16	32	32	32	1568			112	TOTAL 1952
Octets	2				2		2	8	1	1	2	1	1	2	4	4	4	196			14	244
Value	000	0	1	0x225	11	varies	0x00ED	varies	varies	0x0	varies	varies	varies	varies	varies	varies	varies	varies	varies	varies	varies	

Telemetry Packet

Secondary Header Present

Figure 4.3-64. OMPS Dwell Packet Format

Check the JPSS MIS Server at https://jpssmis.gsfc.nasa.gov/frontmenu_dsp.cfm to verify that this is the correct version prior to use.

Table 4.3-18. OMPS Dwell Packet User Data Fields

Start Bit	Bit Size	Mnemonic Name	Description	Units OR State Value	Conversion Coefficients (formula or C5,C4,C3,C2,C1,C0) OR State Name	Data Type
0	16	CCSDS_RDR_VER	Version Number of RDR	N/A	N/A	U
16	8	CCSDS_CONT_COUNT	Number of segmented CCSDS packet sequences - 1	N/A	N/A	U
24	8	CCSDS_CONT_FLAG	Indicates if this CCSDS packet begins an RDR	N/A	N/A	U
32	16	DWL_01_TBL_ID	Dwell Point #1 Table ID	N/A	N/A	U
48	32	DWL_01_OFFSET	Dwell Point #1 Table Byte Offset	N/A	N/A	U
80	32	DWL_01_ADDR	Dwell Point #1 RAM Address	N/A	N/A	U
112	32	DWL_01_VALUE	Dwell Point #1 Value	N/A	N/A	U
144	16	DWL_02_TBL_ID	Dwell Point #2 Table ID	N/A	N/A	U
160	32	DWL_02_OFFSET	Dwell Point #2 Table Byte Offset	N/A	N/A	U
192	32	DWL_02_ADDR	Dwell Point #2 RAM Address	N/A	N/A	U
224	32	DWL_02_VALUE	Dwell Point #2 Value	N/A	N/A	U
256	16	DWL_03_TBL_ID	Dwell Point #3 Table ID	N/A	N/A	U
272	32	DWL_03_OFFSET	Dwell Point #3 Table Byte Offset	N/A	N/A	U
304	32	DWL_03_ADDR	Dwell Point #3 RAM Address	N/A	N/A	U
336	32	DWL_03_VALUE	Dwell Point #3 Value	N/A	N/A	U
368	16	DWL_04_TBL_ID	Dwell Point #4 Table ID	N/A	N/A	U
384	32	DWL_04_OFFSET	Dwell Point #4 Table Byte Offset	N/A	N/A	U
416	32	DWL_04_ADDR	Dwell Point #4 RAM Address	N/A	N/A	U
448	32	DWL_04_VALUE	Dwell Point #4 Value	N/A	N/A	U
480	16	DWL_05_TBL_ID	Dwell Point #5 Table ID	N/A	N/A	U
496	32	DWL_05_OFFSET	Dwell Point #5 Table Byte Offset	N/A	N/A	U
528	32	DWL_05_ADDR	Dwell Point #5 RAM Address	N/A	N/A	U
560	32	DWL_05_VALUE	Dwell Point #5 Value	N/A	N/A	U
592	16	DWL_06_TBL_ID	Dwell Point #6 Table ID	N/A	N/A	U
608	32	DWL_06_OFFSET	Dwell Point #6 Table Byte Offset	N/A	N/A	U
640	32	DWL_06_ADDR	Dwell Point #6 RAM Address	N/A	N/A	U
672	32	DWL_06_VALUE	Dwell Point #6 Value	N/A	N/A	U
704	16	DWL_07_TBL_ID	Dwell Point #7 Table ID	N/A	N/A	U
720	32	DWL_07_OFFSET	Dwell Point #7 Table Byte Offset	N/A	N/A	U
752	32	DWL_07_ADDR	Dwell Point #7 RAM Address	N/A	N/A	U
784	32	DWL_07_VALUE	Dwell Point #7 Value	N/A	N/A	U
816	16	DWL_08_TBL_ID	Dwell Point #8 Table ID	N/A	N/A	U
832	32	DWL_08_OFFSET	Dwell Point #8 Table Byte Offset	N/A	N/A	U
864	32	DWL_08_ADDR	Dwell Point #8 RAM Address	N/A	N/A	U
896	32	DWL_08_VALUE	Dwell Point #8 Value	N/A	N/A	U

Start Bit	Bit Size	Mnemonic Name	Description	Units OR State Value	Conversion Coefficients (formula or C5,C4,C3,C2,C1,C0) OR State Name	Data Type
928	16	DWL_09_TBL_ID	Dwell Point #9 Table ID	N/A	N/A	U
944	32	DWL_09_OFFSET	Dwell Point #9 Table Byte Offset	N/A	N/A	U
976	32	DWL_09_ADDR	Dwell Point #9 RAM Address	N/A	N/A	U
1008	32	DWL_09_VALUE	Dwell Point #9 Value	N/A	N/A	U
1040	16	DWL_10_TBL_ID	Dwell Point #10 Table ID	N/A	N/A	U
1056	32	DWL_10_OFFSET	Dwell Point #10 Table Byte Offset	N/A	N/A	U
1088	32	DWL_10_ADDR	Dwell Point #10 RAM Address	N/A	N/A	U
1120	32	DWL_10_VALUE	Dwell Point #10 Value	N/A	N/A	U
1152	16	DWL_11_TBL_ID	Dwell Point #11 Table ID	N/A	N/A	U
1168	32	DWL_11_OFFSET	Dwell Point #11 Table Byte Offset	N/A	N/A	U
1200	32	DWL_11_ADDR	Dwell Point #11 RAM Address	N/A	N/A	U
1232	32	DWL_11_VALUE	Dwell Point #11 Value	N/A	N/A	U
1264	16	DWL_12_TBL_ID	Dwell Point #12 Table ID	N/A	N/A	U
1280	32	DWL_12_OFFSET	Dwell Point #12 Table Byte Offset	N/A	N/A	U
1312	32	DWL_12_ADDR	Dwell Point #12 RAM Address	N/A	N/A	U
1344	32	DWL_12_VALUE	Dwell Point #12 Value	N/A	N/A	U
1376	16	DWL_13_TBL_ID	Dwell Point #13 Table ID	N/A	N/A	U
1392	32	DWL_13_OFFSET	Dwell Point #13 Table Byte Offset	N/A	N/A	U
1424	32	DWL_13_ADDR	Dwell Point #13 RAM Address	N/A	N/A	U
1456	32	DWL_13_VALUE	Dwell Point #13 Value	N/A	N/A	U
1488	16	DWL_14_TBL_ID	Dwell Point #14 Table ID	N/A	N/A	U
1504	32	DWL_14_OFFSET	Dwell Point #14 Table Byte Offset	N/A	N/A	U
1536	32	DWL_14_ADDR	Dwell Point #14 RAM Address	N/A	N/A	U
1568	32	DWL_14_VALUE	Dwell Point #14 Value	N/A	N/A	U
1600	16	DWL_15_TBL_ID	Dwell Point #15 Table ID	N/A	N/A	U
1616	32	DWL_15_OFFSET	Dwell Point #15 Table Byte Offset	N/A	N/A	U
1648	32	DWL_15_ADDR	Dwell Point #15 RAM Address	N/A	N/A	U
1680	32	DWL_15_VALUE	Dwell Point #15 Value	N/A	N/A	U
1712	16	DWL_16_TBL_ID	Dwell Point #16 Table ID	N/A	N/A	U
1728	32	DWL_16_OFFSET	Dwell Point #16 Table Byte Offset	N/A	N/A	U
1760	32	DWL_16_ADDR	Dwell Point #16 RAM Address	N/A	N/A	U
1792	32	DWL_16_VALUE	Dwell Point #16 Value	N/A	N/A	U

4.3.7 Memory Dump

Upon command, the OMPS outputs up to 4 Mbytes of either volatile (RAM) or non-volatile (Flash) memory (NVM). The “Packets in RDR” field in the grouped packet secondary header is an 8 bit field and therefore limits the number of CCSDS packets in a group to 256. See the X-band Data Format ICD and the 1553 Interface Requirements for NPOESS for more information. Therefore, the maximum memory or table data that can be dumped in a grouped packet is 260594 octets. It will take 17 grouped packets (4,219,290

bytes including all headers) to dump the maximum 4,194,304 bytes of memory. For dumps large enough to require multiple grouped packets, the "Cont Count" field indicates the number of grouped packets (-1) remaining in the dump. The timestamp in the secondary header represents the time the first packet is generated. If multiple grouped packets are required, the first packet of each group contains a timestamp identical to the first packet. The structure of APID 556 is illustrated in Figure 4.3-65 OMPS First Grouped Memory/Table Dump First Packet Format to Figure 4.3-68 OMPS Grouped Memory/Table Dump First Packet Format for the first packet of the first grouped packet, the middle and last of the grouped packets and the first packet of any but the first group of packets. The user data fields are listed in Table 4.3-19.

	PACKET PRIMARY HEADER							SECONDARY HEADER			User Data Field						
	Verson No.	Packet Identification			Packet Sequence		Packet Length	Start of Scan	Packets in RDR	Spare	OMPS Header			Sensor_Info (7)	Table_Dump (74)	Memory or Table Data	
		Type Indicator	Sec Hdr Flag	APID	Sequence Flags	Sequence Count					RDR Version	Cont Count -1	Cont Flag				TOTAL
Bits	3	1	1	11	2	14	16	64	8	8	16	8	8	64	88	7880	8192
Octets	2				2		2	8	1	1	2	1	1	8	11	985	1024
Value	000	0	1	0x22C	01	varies	varies	varies	varies	0x0	varies	varies	varies	varies	varies	varies	

Telemetry Packet

Secondary Header Present

Figure 4.3-65. OMPS First Grouped Memory/Table Dump First Packet Format

MIDDLE PACKET Qty. up to 254

	PACKET PRIMARY HEADER							User Data Field	
	Verson No.	Packet Identification			Packet Sequence		Packet Length	Table/Memory Dump	
		Type Indicator	Sec Hdr Flag	APID	Sequence Flags	Sequence Count		Table/Memory data (middle)	TOTAL
Bits	3	1	1	11	2	14	16	8144	8192
Octets	2				2		2	1018	1024
Value	000	0	0	0x22C	00	varies	0x3F9	varies	

Telemetry Packet

Middle Packet

Figure 4.3-66. OMPS Memory/Table Dump Middle Packet Format

Check the JPSS MIS Server at https://jpssmis.gsfc.nasa.gov/frontmenu_dsp.cfm to verify that this is the correct version prior to use.

LAST PACKET

	PACKET PRIMARY HEADER							User Data Field	
	Verson No.	Packet Identification			Packet Sequence		Packet Length	Table/Memory Dump	
		Type Indicator	Sec Hdr Flag	APID	Sequence Flags	Sequence Count		Table/Memory data (end)	TOTAL
Bits	3	1	1	11	2	14	16	up to 8144	up to 8192
Octets	2				2		2	up to 1018	up to 1024
Value	000	0	0	0x22C	10	varies	varies	varies	

Telemetry Packet

Last Packet

Figure 4.3-67. OMPS OMPS Memory/Table Dump Last Packet Format

FIRST PACKET of a group, but not of the first group

	PACKET PRIMARY HEADER							SECONDARY HEADER			User Data Field				
	Verson No.	Packet Identification			Packet Sequence		Packet Length	Start of Scan	Packets in RDR - 1	Spare	OMPS Header			Table/Memory Dump	
		Type Indicator	Sec Hdr Flag	APID	Sequence Flags	Sequence Count					RDR Version	Cont Count -1	Cont Flag	Table/Memory data (middle)	TOTAL
Bits	3	1	1	11	2	14	16	64	8	8	16	8	8	8032	8192
Octets	2				2		2	8	1	1	2	1	1	1004	1024
Value	000	0	1	0x22C	01	varies	0x3F9	varies	varies	0x0	varies	varies	varies	varies	

Telemetry Packet

Secondary Header Present

Figure 4.3-68. OMPS Grouped Memory/Table Dump First Packet Format

Check the JPSS MIS Server at https://jpssmis.gsfc.nasa.gov/frontmenu_dsp.cfm to verify that this is the correct version prior to use.

Table 4.3-19. OMPS Memory/Table Dump Packet User Data Fields

Start Bit	Bit Size	Mnemonic Name	Description	Units OR State Value	Conversion Coefficients (formula or C5,C4,C3,C2,C1,C0) OR State Name	Data Type
0	16	CCSDS_RDR_VER	Version Number of RDR	N/A	N/A	U
16	8	CCSDS_CONT_COUNT	Number of segmented CCSDS packet sequences - 1	N/A	N/A	U
24	8	CCSDS_CONT_FLAG	Indicates if this CCSDS packet begins an RDR	N/A	N/A	U
32	8	SENSOR_ID	OMPS Sensor Identification (not for Dwell or FSW Bootup status)	N/A	N/A	U
40	8	FSW_VERSION	Flight Software Version Number (not for Dwell or FSW Bootup status) -- major version	N/A	N/A	U
48	8	FSW_VERSION	Flight Software Version Number (not for Dwell or FSW Bootup status) -- minor version	N/A	N/A	U
56	2	MEB_BOOT_IMG_ID	Boot Image Identifier (not for Dwell or FSW Bootup status)	0 1 2	Not Used As-Launched Modifiable	U
58	5	MEB_SBC_ID	Single Board Computer Identifier (not for Dwell or FSW Bootup status)	N/A	N/A	U
63	1	MEB_SIDE	Active MEB Side (not for Dwell or FSW Bootup status)	0 1	MEB2 MEB1	U
64	8	FSW_INIT_STATUS	Flight Software Initialization Status (not for Dwell or FSW Bootup status)	0 -1	OK ERROR	S
72	8	FSW_INIT_CODE	Flight Software Initialization Code (not for Dwell or FSW Bootup status)	N/A	N/A	U
80	8	FSW_PROTECTED	OMPS Protected State Indicator (not for Dwell or FSW Bootup status)	1 0	PROTECTED UNPROTECTED	U
88	4	MEB_FLASH_PWR	SBC Flash Memory Power State (not for Dwell or FSW Bootup status)	0 1	OFF ON	U
92	4	EEPROM_SIDE	EEPROM side used to boot	0 1	Boot Side 1 Boot Side 2	U
96	16	DMP_TBL_ID	Table ID of last table dumped	N/A	N/A	U
112	8	DMP_MEM_TYPE	Table dump memory type (RAM or NVM)	0 1	RAM NVM	U
120	32	DMP_OFFSET	Table dump offset in bytes	N/A	N/A	U
152	32	DMP_SIZE	Table Dump size in bytes	N/A	N/A	U
184	varies	N/A	Memory or Table Dump Contents	N/A	N/A	U

4.3.8 Test Telemetry

When commanded, OMPS will generate one fixed Test Telemetry packet every 5 seconds until disabled by command. The Test Telemetry packet consists of a packet header with APID 546 and a fixed data pattern of 250 'CC' hex characters for a total of 256 bytes. Figure 4.3-69 OMPS Test Telemetry Packet shows the format of the OMPS Test Telemetry Packet.

	PACKET PRIMARY HEADER							User Data Field	
	Verson No.	Packet Identification			Packet Sequence		Packet Length	Test Pattern	
		Type Indicator	Sec Hdr Flag	APID	Sequence Flags	Sequence Count			TOTAL
Bits	3	1	1	11	2	14	16	2000	2048
Octets	2				2		2	250	256
Value	000	0	0	0x222	11	varies	0x00F9	repeating 0xCC	

Telemetry Packet

Secondary Header Not Present

Figure 4.3-69. OMPS Test Telemetry Packet Format

Check the JPSS MIS Server at https://jpssmis.gsfc.nasa.gov/frontmenu_dsp.cfm to verify that this is the correct version prior to use.

4.4 VIIRS

4.4.1 Introduction

The VIIRS Sensor is a nadir viewing, cross-track observing, continuously operating electro-optical imaging sensor and is designed to operate in a circular sun-synchronous orbit with an inclination of approximately 98 degrees relative to the equator. It collects Earth and atmospheric scene spectral radiance in 22 channels spanning the visible through IR regions and sends these data to the NPP spacecraft for transmission to the ground. The 22 channels include 16 moderate resolution bands (of 16 detectors each), 5 imaging resolution bands (which have twice the resolution of the moderate resolution bands), and a Day Night Band (DNB). Some of the moderate channels are dual gain and are capable of measurement within two discrete ranges of radiance. The DNB obtains imagery throughout both the day and night portions of the orbit. The VIIRS flies in a sun synchronous orbit that provides the along track component of the image. The cross track scan is implemented using optics and a rotating telescope as indicated in Figure 4.4-2.

Figure 4.4-1 illustrates the VIIRS Sensor from a downward-viewing perspective showing the mounting surfaces. As shown, the Sensor consists of two modules separately mounted to the spacecraft. The Opto-Mechanical Module contains all of the optical and mechanical assemblies required to collect Earth and calibration data including scanning optics, focal planes, and calibration sources. The Electronics Module provides all of the electrical interfaces to the NPP spacecraft. In response to spacecraft commands, it controls the VIIRS configuration, operates the mechanisms in the Opto-Mechanical Module and collects and formats the data from the focal planes and transmits it to the spacecraft. The Electronics module bolts to a nadir-facing Spacecraft cold plate (not shown) and the OMM attaches to the spacecraft nadir deck via four flex-mounts seen in Figure 4.4-1.

Check the JPSS MIS Server at https://jpssmis.gsfc.nasa.gov/frontmenu_dsp.cfm to verify that this is the correct version prior to use.

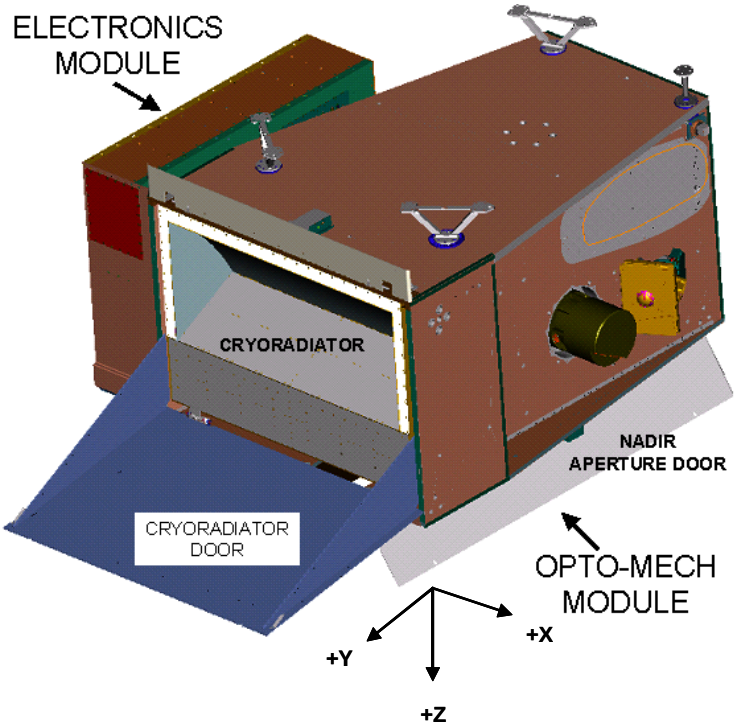

Figure 4.4-1. VIIRS Sensor ANTI-Solar/Travel-Direction Sides & OMM Interface Mounts

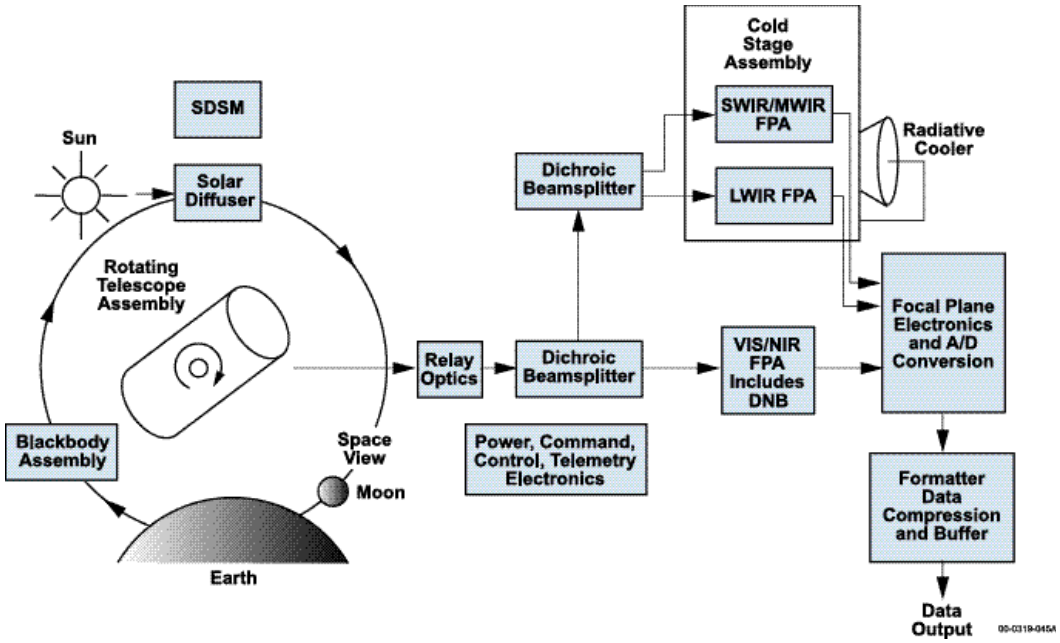

Figure 4.4-2. VIIRS Simplified Design Concept

The scanning optics sweep the linear detector over the earth collecting of 22 coincident swaths of data (one per band), 16 or 32 samples wide. The scan interval is synchronized with the

Check the JPSS MIS Server at https://jpssmis.gsfc.nasa.gov/frontmenu_dsp.cfm to verify that this is the correct version prior to use.

spacecraft motion so that the swaths of data taken on successive scans do not leave gaps in coverage on the Earth's surface. The moderate resolution and Day Night bands have 16 detectors and the imaging bands have 32 detectors arranged in an along-track linear configuration. The nominal 1.7864 second scan interval is synchronized with the satellite motion so that the swaths of data taken on successive scans do not leave gaps in coverage on the Earth's surface.

The processed VIIRS data produce the following EDRs:

- Imagery
- Sea Surface Temperature
- Aerosol Optical Thickness
- Aerosol Particle Size
- Suspended Matter
- Cloud Base Height
- Cloud Cover/Layers
- Cloud Effective Particle Size
- Cloud Optical Thickness
- Cloud Top Height
- Cloud Top Pressure
- Cloud Top Temperature
- Surface Albedo
- Land Surface Temperature
- Sea Surface Temperature
- Vegetation Index
- Snow Cover Fraction
- Snow Cover Binary Map
- Surface Type
- Ice Surface Temperature
- Net Heat Flux
- Ocean Color/Chlorophyll
- Sea Ice Characterization

4.4.2 Instrument Function

The many VIIRS hardware elements are grouped into a lesser number of functional subsystems for the purpose of overall operational control and data collection/generation by commands, telemetry, and packets. The goal of this partitioning into subsystems is to focus on the end user operational interest, and may be tempered by interrelated control and support elements and

quantity of major parameters. A subsystem may be a single circuit card assembly or several, a module, or a group of mechanical items. Figure 4.4-3 provides the defined subsystems together with their 2-alpha identifiers (ID's), summarized in Table 4.4-1.

Table 4.4-1. VIIRS 2-Alpha Subsystem IDs

SC	Spacecraft (NPP or NPOESS)
AP	ASP - Analog Signal Processor & related FPA's
BB	OBB - Onboard Black Body
CP	Control Processor with common power block (1394, SBC, CTA, DPP & partial HMA)
CT *	CTA - Command & Telemetry Assembly
DP	DPP - Digital Preprocessor
EM *	Electronics Module
FT	FTC - Focal Plane Temperature Controller
HM	HMA - Heater & Mechanism Assembly
MF *	Mainframe
PS	Power Supply
SD	SDSM - Solar Diffuser Stability Monitor
SE	SCE - Servo Control Electronics & motors
* These subsystems only have telemetry items.	

The VIIRS images the scene with a Rotating Telescope Assembly (RTA) and a rotating Half Angle Mirror (HAM), which together scan the field of view across the scene, followed by a stationary Aft Imager telescope and spectral separation optics that route segments of the electromagnetic spectrum through three paths to the Focal Planes.

The visible and near infrared portion of the spectrum (approximately 0.4 µm to 0.89 µm) is routed to a Visible and Near-Infrared Focal Plane Assembly (Vis/NIR FPA) with detectors for nine spectral bands. This optical path also illuminates the Day/Night Band (DNB) FPA that is located adjacent to the Vis/NIR FPA. The short-wavelength to mid-wavelength infrared (SWMWIR) portion of the spectrum (approximately 1.2 µm to 4.4 µm) is routed to a SWMWIR FPA with detectors for eight spectral bands. The long-wavelength infrared (LWIR) portion of the spectrum (approximately 8.4 µm to 12.5 µm) is routed to a LWIR FPA with five sets of detectors covering four spectral bands.

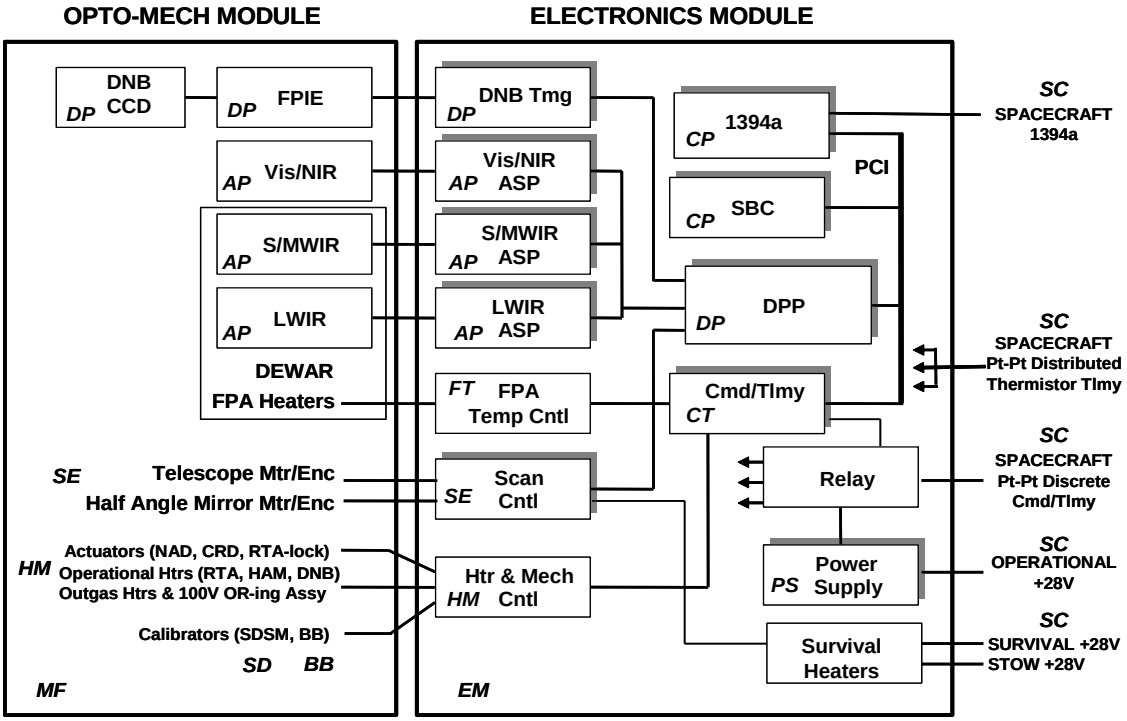

Figure 4.4-3. VIIRS Subsystem Overview with 2-alpha Ids

A passive Cryoradiator viewing deep space cools the SWMWIR and LWIR FPAs to enable low noise detection of the required wavelengths of infrared radiation.

In the VIIRS Electronics Module, the Analog Signal Processor (ASP or AP) read the measured scene radiances from the FPAs in analog form and process them until the Digitial Preprocessor (DPP or DP) converts them to digital form. The Control Processor (CP) subsystem performs lossless entropy coding on the data, and formats the compressed data into CCSDS packets transmitted to the spacecraft via an IEEE 1394 interface. Much of the formatting process is performed by the reprogrammable VIIRS Single Board Computer (SBC).

In the VIIRS Electronics Module, the Command & Telemetry Assembly (CTA or CT) performs processing and execution of commands, control of temperatures within the sensor through the Focal Plane Temperature Controller (FT) and operation of all moving mechanisms. The SBC measures and formats the “engineering” and telemetry data necessary to verify the VIIRS sensor status and to process the VIIRS scene data. The gray shaded boxes indicate redundancy. See Figure 4.4-3.

In each scan, VIIRS views two full-aperture on-board calibration sources and deep space in addition to the earth. The calibration sources include a Blackbody (BB) with accurately-known emissivity and temperature, and a Solar Diffuser (SD) that provides precisely-attenuated sunlight in the visible region of the spectrum. Since the diffusing surface of the SD may degrade slightly over time on orbit, the sensor also includes a Solar Diffuser Stability Monitor (SDSM) to detect

changes in the SD's reflected radiance. SD and SDSM data is only valid during a three and a half minute window each orbit that occurs near the Earth's south pole when the sun illuminates their respective input ports. The view of space prior to each scan acts as a known low-radiance source, and also provides occasional observations of the moon during the monthly VIIRS Lunar Calibration Maneuver.

The VIIRS includes the following controllable mechanisms: (1) Rotating Telescope motor, (2) Half Angle Mirror motor, (3) a stepper motor that turns the three-position pointing mirror within the SDSM, (4) Nadir Aperture Doors (NAD), (5) Cryoradiator Door (CRD), and (6) Rotating Telescope Launch Lock release mechanism. Once opened, the NAD and CRD cannot be closed on orbit. The Rotating Telescope Launch Locks also cannot be reengaged on orbit once they have been released.

The two VIIRS Power Supplies (PS) provide power conditioning. Each has five sections, labeled A through E. When the VIIRS first turns On, Section_A (which powers the control processor) and Section_C (which powers the Heater and Mechanism Assembley) are the only modules that automatically comes On. The other sections are commanded On to support the particular sensor mode or activity.

The Heaters & Mechanism Assembly (HMA or HM) controls the heaters to activate the telescope launch locks and open the cryoradiator and nadir aperture doors. It also maintains other components, including the cryoradiator stages for outgassing, the blackbody calibrator, the RTA motor operational heater, theHAM motor operational heaters, the DNB operational heater, the SDSM. Note, the RTA, DNB, and HAM each have survival heaters that are powered at the spacecraft level.

Additional information for instrument function is included in the OCD.

4.4.3 Modes and Packet Structure

VIIRS has 9 Sensor Modes to support NPP mission operations. The modes and most common transitions are illustrated by the Figure 4.4-4. The spacecraft controls entry and exit of the first three modes. The remaining modes are established by a single bus Mode command.

Note, "Sensor Modes" is used as the modes title instead of "Operational Modes," in order not to cause interpretation conflict with the "OPERATIONAL DAY/NIGHT" mode.

Check the JPSS MIS Server at https://jpssmis.gsfc.nasa.gov/frontmenu_dsp.cfm to verify that this is the correct version prior to use.

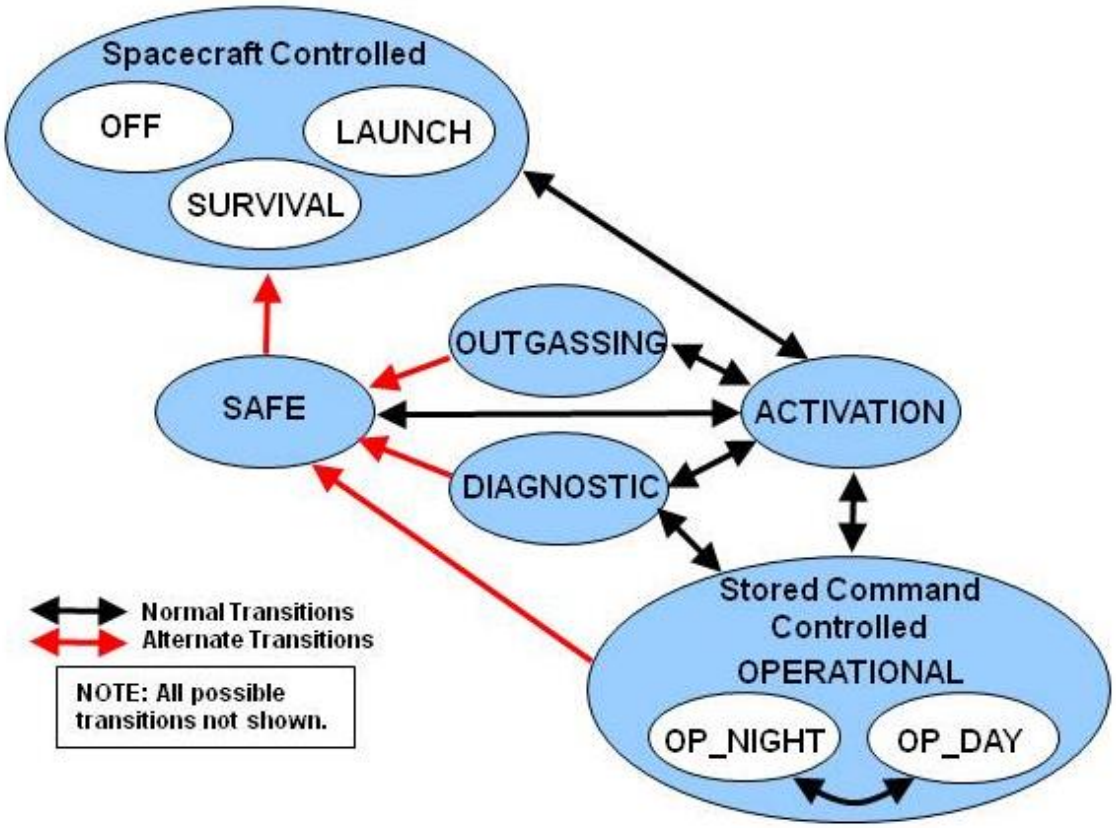

Figure 4.4-4. VIIRS Sensor Mode Transition Diagram

VIIRS outputs six types of packets unique to the X-band. Science, Calibration and Engineering packets are transmitted when in Operational Mode and Diagnostic mode with the RTA Scanning. Memory Dump packets are available in every mode including Activation, Outgassing, and Safe modes. Housekeeping telemetry is available in every mode (in diagnostic mode it is called Diagnostic Housekeeping Telemetry and has a different APID). Unique APIDs are assigned to each packet to enable them to be identified by source (instrument, ground segment, or spacecraft), instrument mode, and type of data. The contents, and in some cases the internal structure of the packets differ depending on the source and mode. Table 4.4-2 lists all X-band unique APIDs.

1. HRD
2. Telemetry
3. Calibration
4. Engineering
5. Memory Dump
6. LEO&A
7. Test

The VIIRS packets are sent out in three different groups, and the packet order between the groups is non-deterministic. The first group is the telemetry packet group with the Housekeeping packet. The second group is the Science data that consists of the Engineering packet, followed by HRD (band) packets, and ends with the Calibration packet. These packets are sent out in order of the DPP band processing table order. The third group is Memory Dump packets.

Table 4.4-2. VIIRS Mission Data Packet Types

VC ID	AP ID	Telemetry Packet Name	Data Rate (bps) by Mode		Downlink		Packet Size (octets), Note 8
			Operational	Diagnostic	HRD	SMD	
0	768	Housekeeping, Note 7	Note 7	Note 7	✓	✓	Note 7
0	769	LEO&A Housekeeping, Note 7	Note 7	Note 7	✓	✓	Note 7
18	770	Test Packet	--	1146.4		✓	256
0	773	Diag Housekeeping Tlmy	--	1997.3		✓	446
21	780	Mem Dump	--			✓	Up to 4196524
16	800	HRD Operational (Day Only) – M4	variable*	--	✓	✓	177016*
16	801	HRD Operational (Day Only) – M5	variable*	--	✓	✓	177016*
16	802	HRD Operational (Day Only) – M3	variable*	--	✓	✓	177016*
16	803	HRD Operational (Day Only) – M2	variable*	--	✓	✓	177016*
16	804	HRD Operational (Day Only) – M1	variable*	--	✓	✓	177016*
16	805	HRD Operational (Day Only) – M6	variable*	--	✓	✓	86656*
17	806	HRD Operational – M7	variable*	--		✓	177016*
16	807	HRD Operational (Day Only) – M9	variable*	--	✓	✓	86656*
16	808	HRD Operational – M10	variable*	--	✓	✓	86656*
16	809	HRD Operational – M8	variable*	--	✓	✓	86656*
16	810	HRD Operational – M11 Note 9	variable*	--	✓	✓	86656*
16	811	HRD Operational – M13	variable*	--	✓	✓	177016*
16	812	HRD Operational – M12	variable*	--	✓	✓	86656*
16	813	HRD Operational – I4	variable*	--	✓	✓	340412*
16	814	HRD Operational – M16	variable*	--	✓	✓	86656*
16	815	HRD Operational – M15	variable*	--	✓	✓	86656*
16	816	HRD Operational – M14	variable*	--	✓	✓	86656*
16	817	HRD Operational – I5	variable*	--	✓	✓	340412*
16	818	HRD Operational (Day Only) – I1	variable*	--	✓	✓	340412*
16	819	HRD Operational (Day Only) – I2	variable*	--	✓	✓	340412*
16	820	HRD Operational (Day Only) – I3	variable*	--	✓	✓	340412*
16	821	HRD Operational - DNB	variable*	--	✓	✓	124756*
16	822	HRD Operational, Note 3 – DNB MGS	Variable*	--	✓	✓	124756*
16	823	HRD Operational, Note 3 – DNB LGS	Variable*	--	✓	✓	124756*
N/A	824	HRD Operational Test, Note 4	Note 4	--		✓	Note 4

VC ID	AP ID	Telemetry Packet Name	Data Rate (bps) by Mode		Downlink		Packet Size (octets), Note 8
			Operational	Diagnostic	HRD	SMD	
16	825	HRD Operational Calibration	Variable*	--	✓	✓	188806*†
16	826	HRD Oper Engineering, Note 2	41,728.6	--	✓	✓	9318
18	830	HRD Diagnostic – M4, Note 5	--	283655.7		✓	46292
18	831	HRD Diagnostic – M5, Note 5	--	283655.7		✓	63316
18	832	HRD Diagnostic – M3, Note 5	--	283655.7		✓	63316
18	833	HRD Diagnostic – M2, Note 5	--	283655.7		✓	63316
18	834	HRD Diagnostic – M1, Note 5	--	283655.7		✓	63316
18	835	HRD Diagnostic – M6, Note 5	--	283655.7		✓	63316
18	836	HRD Diagnostic – M7, Note 5	--	283655.7		✓	63316
18	837	HRD Diagnostic – M9, Note 5	--	283655.7		✓	63316
18	838	HRD Diagnostic – M10, Note 5	--	283655.7		✓	63316
18	839	HRD Diagnostic – M8, Note 5	--	283655.7		✓	63316
18	840	HRD Diagnostic – M11, Note 5	--	283655.7		✓	63316
18	841	HRD Diagnostic – M13, Note 5	--	283655.7		✓	63316
18	842	HRD Diagnostic – M12, Note 5	--	283655.7		✓	63316
18	843	HRD Diagnostic – I4, Note 5	--	1117007.4		✓	249332
18	844	HRD Diagnostic – M16, Note 5	--	283655.7		✓	63316
18	845	HRD Diagnostic – M15, Note 5	--	283655.7		✓	63316
18	846	HRD Diagnostic – M14, Note 5	--	283655.7		✓	63316
18	847	HRD Diagnostic – I5, Note 5	--	1117007.4		✓	249332
18	848	HRD Diagnostic – I1, Note 5	--	1117007.4		✓	249332
18	849	HRD Diagnostic – I2, Note 5	--	1117007.4		✓	249332
18	850	HRD Diagnostic – I3, Note 5	--	1117007.4		✓	249332
18	851	HRD Diagnostic – DNB, Note 5	--	283655.7		✓	63316
18	852	HRD Diagnostic – DNB MGS, Note 5	--	283655.7		✓	63316
18	853	HRD Diagnostic – DNB LGS, Note 5	--	283655.7		✓	63316
N/A	854	HRD Diagnostic Test, Note 4	--	Note 4		✓	Note 4
18	855	HRD Diag Calibration, Note 5	--	578300.0		✓	185782
18	856	HRD Diag Engineering, Note 5	--	41,728.6		✓	9318

1. VIIRS is assigned 128 decimal integer APIDs 768 – 895. Table is by APID sequence. Presently 37 Spares. Only those APIDs unique to the X-band are shown.
2. HRD Operational in compressed form except Engineering.
3. Packet size same as normal DNB data (rarely transmitted & then only in Night Mode).
4. Not used and therefore is not routed to a virtual channel but is reserved. Fixed test packets upon command occur in assigned Operational & Diagnostic band packets with Header Test Flag. See VIIRS Command, Telemetry, Science & Engineering Data Description for description.
5. HRD Diagnostic not compressed. With the exception of the Diagnostic Engineering Packet, these packets sizes (and therefore the rates) are configurable via Table ID 7 upload. Sizes reflect the maximum packet size.
6. LRD Operational not on Flight 1. Compressed by Spacecraft except Engineering.
7. Documented in the NPP Command & Telemetry Handbook

8. Packet sizes include all octets in a grouped packet. VIIRS Operational and Diagnostic packets are grouped by design. See the respective sections for the size of each packet within the group.
9. Band M11 is not the flight software default for Op_Night, but has to be enabled via the SET_DP_BANDINDEX_TRANSMIT command. This default was selected for compatibility with ground until Block 2.0 is installed.

* The Operational packets sizes and data rates are variable due to compression. The table lists the size with all fields uncompressed.

† The Calibration Packet content and size changes between Day and Night Modes. The size listed in the Table is the larger Night size. In Day Mode, the group of 24 uncompressed packets is 186118 octets.

4.4.3.1 Off Mode and Launch Mode

The VIIRS is in Off Mode when no external power is applied. The sensor performs no functions. It is not recommended to ever place VIIRS in Off mode as this would mean that neither Operational power nor Survival power is being provided to VIIRS. Spacecraft provided Stow power would still be recommended to hold the RTA in its stowed, anti-nadir position, but will only be utilized if Stow power control had been passed to the Spacecraft (i.e. if we transitioned through Safe mode). The only telemetry that is available during Off mode is the point to point, passive telemetry.

If VIIRS enters Off mode as the result of a SC Sudden Removal of Power then an existing SC Distributed Support Electronics Package (DSEP) functionality will enable the VIIRS Survival Heaters within 60 seconds of VIIRS Operational power removal; this activity places VIIRS in Survival mode.

From Off mode, VIIRS may transition to Survival mode (preferred), by applying Survival power, or to Activation mode by applying Operational Power. If the passive telemetry checks indicate (red) Alarms, VIIRS must first transition to Survival mode to allow the sensor to warm up.

The Launch Mode describes the state of the VIIRS with nadir aperture and cryoradiator doors latched, launch locks applied and no power applied. Once activated after Launch Mode, the VIIRS is not expected to transition to Off mode but may do so by removing all power.

4.4.3.2 Survival Mode

If VIIRS is being transitioned to Survival mode from Safe mode, the RTA motor winding control has already been given to the SC Stow power and the RTA will remain in its stowed, anti-nadir position. All volatile memory will be lost with the removal of Operational power; ensure all desired table or memory dumps are completed before transitioning to Survival mode.

Upon removal of Operational power and provided that Survival power is still being supplied by the Spacecraft, VIIRS enters Survival mode. If this was a sudden removal of power the RTA may not be properly stowed which could lead to a possible sun stare condition (not recommended). The only telemetry available during Survival mode is the point to point, spacecraft provided, passive telemetry.
From

4.4.3.3 Activation Mode

The VIIRS enters Activation Mode when Operational power is applied to the sensor. VIIRS Sensor may also be commanded into Activation Mode from any other powered mode. The telescope does not rotate during Activation Mode so no Science Data is not being produced. Housekeeping telemetry is output to indicate the initial state of the sensor. In Activation mode, the VIIRS power supply is configured so that all Operational and CFPA Heaters, thermostatic controls, and Health and Status telemetry are available. From Activation Mode, VIIRS may transition to any other mode.

4.4.3.4 Outgassing Mode

The VIIRS sensor is placed into Outgassing Mode from Activation Mode by a single bus mode command. This mode is used to decontaminate certain mechanical or optical elements of the sensor. Housekeeping telemetry is output but the telescope remains in a stowed position so no mission data are output. When Outgas mode is commanded, which may only be commanded from Activation mode, all Operational Heaters are off; the set points are not changed. All Health and Status telemetry is available; however, the RTA was stowed when VIIRS was commanded to Activation mode so no Science Data is available. The outgas heaters of the VIIRS Power Supply are not automatically enabled with the transition to Outgas mode and must be enabled separately.

From Outgas Mode, VIIRS may transition to Activation Mode (preferred) or Safe Mode.

4.4.3.5 Operational Mode

Operational Mode is the normal operating condition for the sensor. It has two sub-modes Operational-Day and Operational-Night for the day and night portions of the orbit. All data outputs are on, scene data, engineering and calibration source data are transmitted, and telemetry is monitored and transmitted. As the spacecraft moves through its orbit, commands stored in the Stored Command Table cause the VIIRS to switch between Operational-Nightand Operational-Day sub-modes at the appropriate times. This table must be updated by ground commands and table uploads weekly.

The VIIRS outputs all spectral bands in Operational-Day Mode. Operational-Night mode is identical to Operational-Day mode except that, during Operational-Night mode, VIIRS only processes and transmits HRD from 11 of its 22 spectral bands as identified in Table 4.4-4 are transmitted. The VIIRS is also capable of transmitting the medium and low gain data from Stages 2 and 3 of the Day/Night Band CCD upon command. These data will be formatted in the same manner as other DNB data but in separate APIDs (822 and 823). The normal Night mode data will continue to be transmitted.

From either Operational mode, VIIRS may transition between Operational-Day and Operational-Night, to Activation mode, Diagnostic mode, or Safe mode.

4.4.3.6 Diagnostic Mode

Diagnostic Mode may only be commanded from Activation mode or Operational modes. The Macro Command Table configures the VIIRS Power Supply and does not change the scan / stow status of the RTA (i.e. if transitioning from Activation mode, the RTA will be stowed; if transitioning from Operational modes, the RTA will be scanning). Science Data is not available

Check the JPSS MIS Server at https://jpssmis.gsfc.nasa.gov/frontmenu_dsp.cfm to verify that this is the correct version prior to use.

unless the HAM and RTA are synchronized, and when available, these packets are processed differently and mapped to different APIDs than in Operational modes. All Health and Status telemetry remains available and the Operational and CFPA heaters (and their set points) remain unchanged.

Diagnostic Mode encompasses many sensor configurations necessary to support software updates. It also supports trouble shooting by allowing different sampling of telemetry. Sensor data with little post-processing are output in a distinct set of APIDs from operational mode. The normal post-processing functions can be re-activated upon command to operational mode.

Since the data format is highly varied based on the scene, test patterns can be enabled to fill the data output sequence with one or more chosen standard pixel sequences for each band, in place of the actual detector output data. The known sequence is sent along the sensor electronics, through the formatting, and on to the spacecraft. Ground analysts verify proper operation of the post-processing and formatting functions.

In the Diagnostic/Early Orbit Checkout mode, diagnostic housekeeping telemetry data packets can replace the normal telemetry packets upon command. The telemetry data is exactly the same in both normal housekeeping and diagnostic housekeeping on the APIDs are different.

The VIIRS supports software modifications only in Diagnostic Mode with the RTA Stowed.

4.4.3.7 Safe Mode

Under fault conditions sensed by the VIIRS (auto safing enabled) or the spacecraft, the VIIRS turns off collection of science data and stows the telescope within 45 seconds by a call to the Safe Mode Manager. VIIRS can be commanded into Safe mode from any powered mode, but VIIRS will only autonomously transition to Safe if auto safing is enabled and if certain conditions are met. No mission data are output though housekeeping telemetry remains enabled.

Once VIIRS is in Safe mode commanding is restricted to a reduced set of commands. All other non-Safe mode, all time-tagged, and all stored commands (even if it is an allowable safe mode command) will be dropped.

From Safe mode, VIIRS may transition to Activation mode, or Survival mode.

Table 4.4-3 provides the common APIDs received from VIIRS per mode.

Table 4.4-3. Common APIDs Received from VIIRS per Mode

Mode	Data Packet Type	APIDs
Activation, Outgas, or Safe	Health and Status Telemetry	768
Diagnostic	Health and Status Telemetry	773
	Engineering*	856
	HRD*	830 – 853
	Calibration*	855

Mode	Data Packet Type	APIDs
Operational-Day	Health and Status Telemetry	768
	Engineering	826
	HRD	800 - 821
	Calibration	825
Operational-Night	Health and Status Telemetry	768
	Engineering	826
	HRD	800 - 805, 807, 810, 818 - 820, and 822† - 823†
	Calibration	825
The following Packets are available, independent of bus mode: LEO&A Telemetry (APID 769), Memory Dump (APID 780, only when commanded), and Test (APID 770, only when commanded). * The RTA and HAM must be synchronized (RTA scanning) for Science Data to be sent in Diagnostic mode. † DNB packets must be commanded to SEND for these APIDs to be sent		

4.4.4 Mission Data

Sensor data is collected from four views - Earth View, Space View, Solar Diffuser, and Blackbody. The VIIRS collects Earth view data in Operational Mode over a field of view that is approximately +/- 56 degrees from nadir, and a reduced FOV for Scanning Diagnostic Mode which can be modified via a Table ID7 upload. The Earth view data is processed and downlinked in the High Rate Data (HRD) packets. The Space View, Solar Diffuser View, and Blackbody View are collected to support instrument calibration and are downlinked in the Calibration Packet.

All SC-VIIRS 1394 bus data exchanges are via CCSDS packets. Packet formats comply with the CCSDS Standards, as tailored for NPOESS use per the FT1394 System IRD. The secondary header timestamp is formatted consistent with Table 4.1-3. It represents the time at the start of the scan, except for Memory Dump packets where it represents the current time the memory dump was generated. All fields are big endian.

4.4.4.1 Science Data

Science data includes the HRD band packets, the Engineering packet and the Calibration packet and is only available if the Telescope is scanning.

The VIIRS Science Data consists of 24 unique APIDs output during Operational mode and Scanning Diagnostic mode. There is one APID for each of the five imaging and sixteen moderate resolution bands. The Day Night Band has 3 APIDs to identify three levels of gain settings. The normal DNB packet (APID 821) is the auto selected DNB Gain Stage based on Earth Scene and is output for the full orbit. The packets that output the mid gain and low gain DNB stages (APIDs 822 & 823) can be enabled via command during the night portion of the orbit.

All of the science APIDs have a common format. Each APID contains one scan of data from one band formatted into grouped packets. Each science data grouped packet consists of a First CCSDS Packet, N-1 Middle CCSDS Packets, and a Last CCSDS Packet, where N is the number of detectors associated with the band (16 for Moderate, 32 for Imaging, see Table 4.4-5). The First Packet contains metadata associated with the DPP that describes the collect conditions of the data. The Middle and Last Packets contain the actual Earth view detector data. The number of detectors per band is shown in Table 4.4-5 and is present in the Number_of_Packets parameter in the Secondary Header of the First packet.

Table 4.4-4 shows the instrument bands by type (e.g. visible, IR), by gain characteristics, and lists the predominant noise source for each band. A key element is the gain characteristics of each band (single or dual gain) because this defines other processing. The M16 band uses time delay integration (TDI) of two detectors, M16A and M16B. Its data are sent as a single band in the science and diagnostic packets, but sent separately in the calibration packet.

Check the JPSS MIS Server at https://jpssmis.gsfc.nasa.gov/frontmenu_dsp.cfm to verify that this is the correct version prior to use.

Table 4.4-4. VIIRS Science Data Packet Band Information

	Band	λ	Δλ	Gain	Noise Source	Radiance
VIS	M1	0.412	0.020	Dual High	Photon	Reflective
		0.412	0.020	Low	Photon	
	M2	0.445	0.018	Dual High	Photon	Reflective
		0.445	0.018	Low	Photon	
	M3	0.488	0.020	Dual High	Photon	Reflective
		0.488	0.020	Low	ASP	
	M4**	0.555	0.020	Dual High	Photon	Reflective
		0.555	0.020	Low	ASP	
	I1	0.640	0.080	Single	ASP	Reflective
	M5**	0.672	0.020	Dual High	Photon	Reflective
		0.672	0.020	Low	ASP	
	M6	0.746	0.015	Single	Photon	Reflective
NIR	I2	0.865	0.039	Single	Photon	Reflective
	M7*	0.865	0.039	Dual High	Photon	Reflective
		0.865	0.039	Low	ASP	
SWIR	M8*	1.240	0.020	Single	Detector	Reflective
	M9	1.378	0.015	Single	Detector	Reflective
	I3	1.610	0.060	Single	Detector	Reflective
	M10*	1.610	0.060	Single	ASP	Reflective
	M11	2.250	0.050	Single	Detector	Reflective
MWIR	I4*	3.740	0.380	Single	Detector	Emissive
	M12*	3.700	0.180	Single	Detector	Emissive
	M13*	4.050	0.155	Dual High	Photon	Emissive
		4.050	0.155	Low	ASP	
LWIR	M14*	8.550	0.300	Single	Detector	Emissive
	M15*	10.763	1.000	Single	ASP	Emissive
	I5*	11.450	1.900	Single	Detector	Emissive
	M16*	12.013	0.950	Single	Detector	Emissive
	DNB*	0.7	0.4	Variable	Photon	Reflective

Note: All spectral bands are collected during Operational-Day Mode.
* Indicates the bands output during Operational-Night Mode.
** M4 and M5 Calibration data can still be valid in Operational-Night Mode as long as the sun illuminates the diffuser and DNB packets are set to NOT_SEND. If DNB MGS and LGS packets are commanded to SEND, they will overwrite the M4 and M5 data.
Yellow highlights in table XYZ indicate Imaging bands.

The science data Middle and Last packets contain subfields specifying the location of the first pixel (or sample) in the packet and the number of pixels (or samples) in the packet. This information is not needed when the instrument is in Operational mode. However, in Diagnostic mode each packet does not contain data corresponding to an entire scan so the location of the

first pixel and number of pixels parameters are needed for displaying and interpreting the data in a packet.

Table 4.4-5. VIIRS Gain, Detector, & Bit Summary for Science Data

Band	# of Zero Bits	# of Gain Bits	# of Bits for Data Number	Total Number of Bits (15)	# of Gain Settings	# of Dets/Band	[1] # of Bits/Word
M1	**2**	**1**	**12**	**15**	**2**	**16**	**13**
M2	**2**	**1**	**12**	**15**	**2**	**16**	**13**
M3	**2**	**1**	**12**	**15**	**2**	**16**	**13**
M4	**2**	**1**	**12**	**15**	**2**	**16**	**13**
M5	**2**	**1**	**12**	**15**	**2**	**16**	**13**
M6	3	0	12	15	1	16	12
M7	**2**	**1**	**12**	**15**	**2**	**16**	**13**
M8	3	0	12	15	1	16	12
M9	3	0	12	15	1	16	12
M10	3	0	12	15	1	16	12
M11	3	0	12	15	1	16	12
M12	3	0	12	15	1	16	12
M13	**2**	**1**	**12**	**15**	**2**	**16**	**13**
M14	3	0	12	15	1	16	12
M15	3	0	12	15	1	16	12
M16	3	0	12	15	1	16	12
I1	3	0	12	15	1	32	12
I2	3	0	12	15	1	32	12
I3	3	0	12	15	1	32	12
I4	3	0	12	15	1	32	12
I5	3	0	12	15	1	32	12
DNB (stage1) Most sensitive (low rad/high gain)	0	1 (set "0")	14	15	NA	16	15
DNB (stage2) (med rad/med gain)	0	2 (set "10")	13	15	NA	16	15
DNB (stage3) Least sensitive (high rad/low gain)	0	2 (set "11")	13	15	NA	16	15
DNB MGS All data is med rad/med gain Apply Stage2	0	2 (set "10")	13	15	NA	16	15
DNB LGS All data is high rad/low gain Apply Stage 3	0	2 (set "11")	13	15	NA	16	15

Notes: [1] indicates meaningful band bits before compression & after ground data recovery. For the dual gain bands (bold in the table), the following logic applies to the gain bit. If the gain bit == 0, this is a HIGH State. If the gain bit == 1, this is a LOW State. All DNB bands above Stage 1 are the most significant bit of the 14 bit value.

Table 4.4-5 summarizes the characteristics of the data words in each band. All data words are 15 bits in length, however the allocation of the bits between gain and data information depends on the band. The number of detectors in each band is also shown for reference in the table.

To meet the requirements for EDR products, accommodate S/C downlink bandwidth limitations, and compensate for artifacts arising from the scan geometry over the Earth's surface, several types of on-board processing are performed by the instrument electronics. Figure 4.4-5 shows the artifacts of the scanning geometry.

Bow Tie Deletion eliminates redundant data at the edges of successive scans to reduce the data rate. Sample aggregation, the combining of adjacent samples along a scan, reduces overall bandwidth, improves SNR, and matches the IFOV footprints of samples across the scan. Spectral and/or spatial differential encoding of the bands followed by lossless compression reduces the data rate Note: this only applies in Operational Mode. (This is not shown in Figure 4.4-5).

Check the JPSS MIS Server at https://jpssmis.gsfc.nasa.gov/frontmenu_dsp.cfm to verify that this is the correct version prior to use.

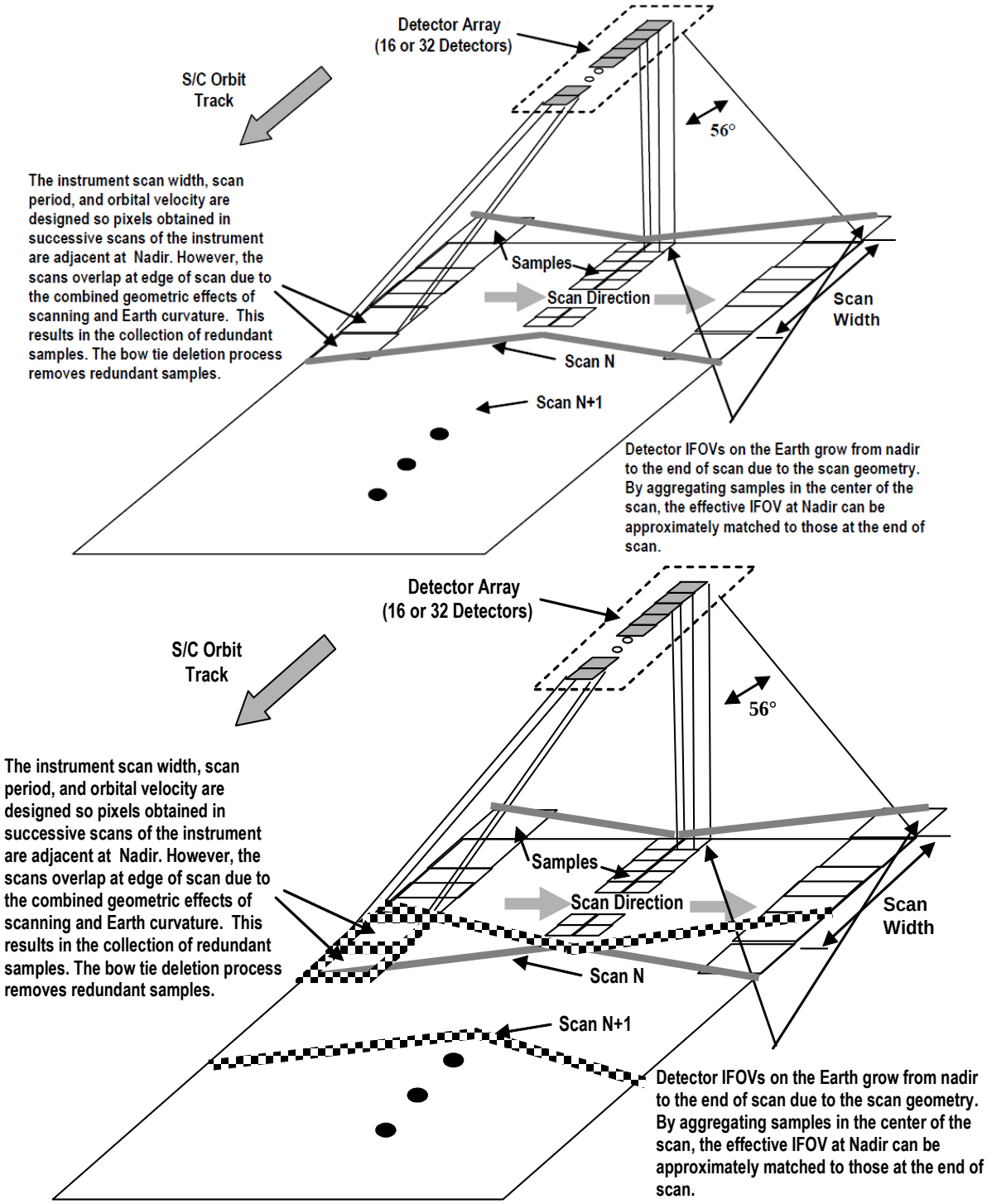

Figure 4.4-5. VIIRS Scanning Geometry for Science Data

There are two instrument modes which send scanning data - Operational and Diagnostic. In Operational Mode the instrument performs all of the processing indicated above - Bow Tie deletion, Aggregation, and Lossless Compression. In Diagnostic Mode, all of these processing functions are disabled.

The Day Night Band processing differs from that described above in several respects. The DNB Focal Plane has 672 sub-pixels in a CCD array that utilize an on-board 2-D aggregation scheme to generate 16 “pseudo-detectors” with a near constant 2-D sample size across the scan. This special DNB 2-D aggregation eliminates the need for any bow-tie deletion associated with a long track sample growth at edge of scan that was discussed above for the other bands. Bow Tie Deletion is not performed for the Day Night Band in a way that is identifiable at the packet level. Rather than by post processing, the DNB inherently aggregates the CCD data on both sides of Nadir during data collection by a series of sample timing steps. At the packet level the DNB samples are organized into 6 aggregation zones, so they resemble the other bands. The DNB internal aggregation has 32 modes which vary within the 6 zones in order to maintain the near constant FOV (see Fig. 4.4-13). The aggregation within a zone for the other bands is constant, leading to a change in sample size variations in sample FOV within a zone as described in the next section. Compression is performed on the DNB data in each of the aggregation zones at the packet level.

The term Sample is used to denote the output of one detector taken at a given instant of time. When Samples are combined in the aggregation process the term Pixel is used to denote the result. This nomenclature is consistent at the packet level. However, it should be noted that if the data is being described at a lower level these definitions require some qualification, especially for the DNB.

A functional overview of the on-board processing performed in Operational Mode is shown in Figure 4.4-6. Moderate resolution and imaging bands undergo sample aggregation, bow tie deletion, spectral or spatial differential encoding, and compression. The VIIRS packets indicate whether aggregation, bow tie deletion, and compression are performed, and the processing order for spectral differential encoding. Arithmetic processing is performed prior to differential encoding to ensure that the differential encoding process does not result in negative numbers. For dual gain bands, additional processing is performed to incorporate data on the gain state into the data words. After unique aggregation described below in Section 4.4.4.1.6 DNB data is compressed like the other bands.

Check the JPSS MIS Server at https://jpssmis.gsfc.nasa.gov/frontmenu_dsp.cfm to verify that this is the correct version prior to use.

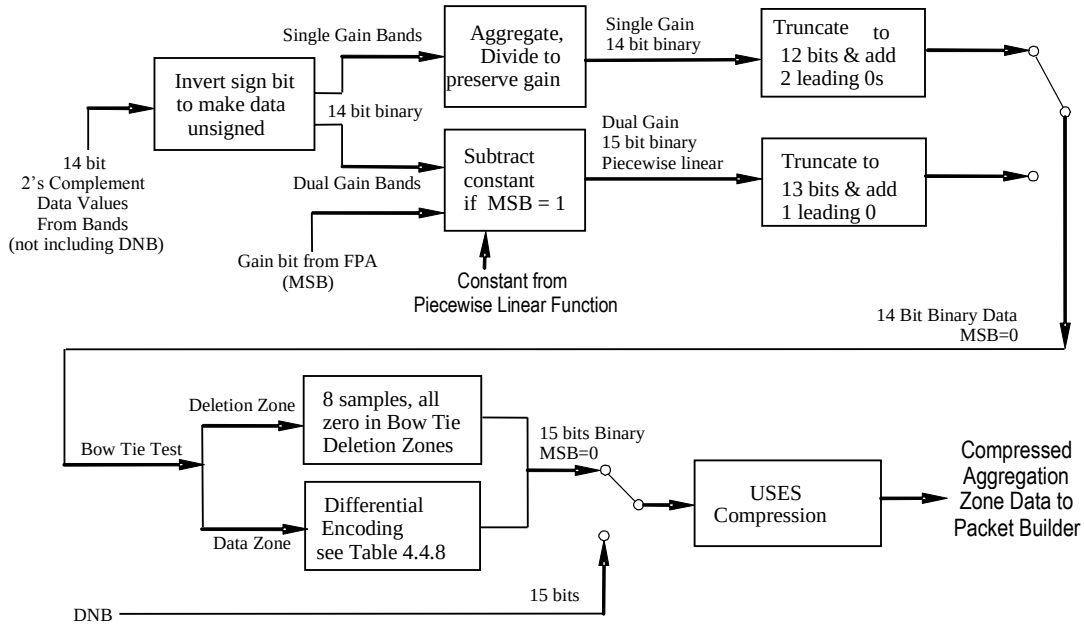

Figure 4.4-6. VIIRS Overview of Science Data Processing in Operational Mode

4.4.4.1.1 Operational Mode Aggregation

Sample aggregation is performed on the single gain bands. Samples are aggregated 3:1, 2:1, or 1:1 to form Pixels. The amount of aggregation is a function of their location in the scan, with 3:1 aggregation occurring in the middle of the scan and 1:1 (no) aggregation occurring at the edges. The regions over which aggregation is performed are called Aggregation Zones.

Figure 4.4-7 illustrates the aggregation process and the formation of aggregation zones for single gain and imaging bands. (DNB aggregation is described below in the DNB Processing section.) Although the number of detectors and pixels vary, the aggregation process is the same for the moderate resolution single gain bands and the single gain imaging bands. Figure 4.4-8 shows the boundaries and sizes of the aggregation zones and the along-scan resolution that results after aggregation of the single gain bands. Although no aggregation is actually performed on the dual gain band data, it is grouped into six "aggregation zones" for purposes of spectral differencing and compression. Thus when viewed at the packet level, the data from dual gain bands looks very similar to that from single gain bands.

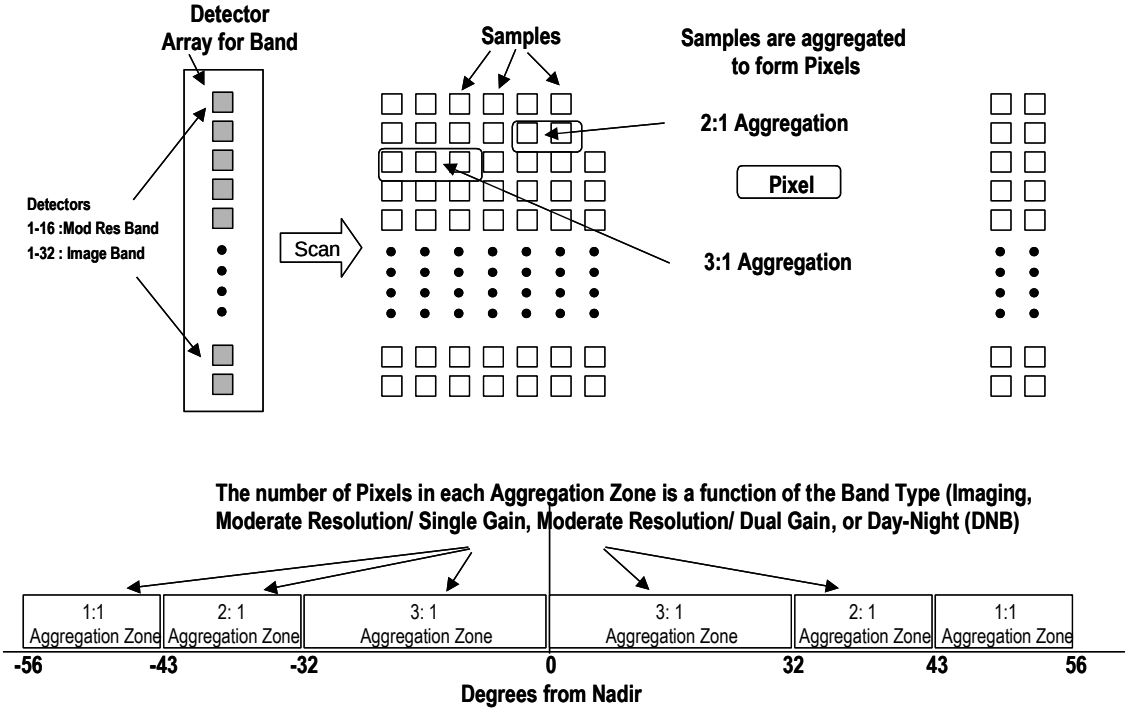

Figure 4.4-7. VIIRS Overview Of Aggregation & Aggregation Zones For Single Gain/Imaging Hrd – Operational Mode

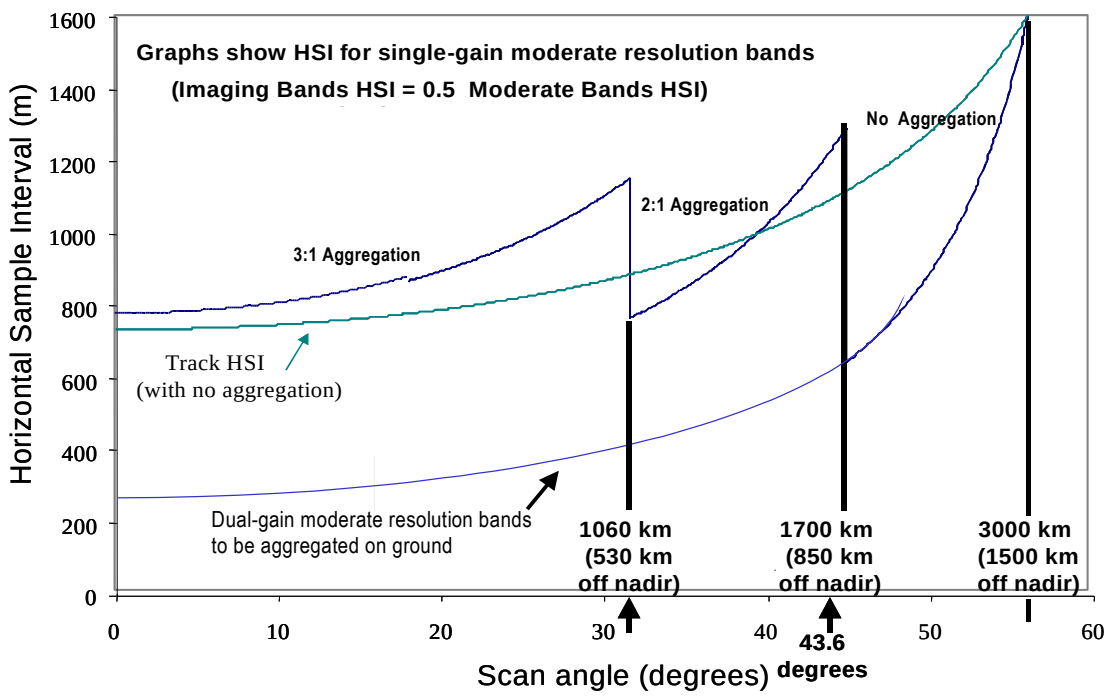

Figure 4.4-8. VIIRS Overview of Aggregation Zone Definition

4.4.4.1.2 Operational Mode Bow Tie Deletion

Bow Tie Deletion is applied to all imaging and moderate resolution bands irrespective of their gain characteristics. To simplify processing, Bow Tie Deletion is done at the aggregation zone level on a detector-by-detector basis. Although this results in some overlaps remaining between successive scans, the reduction in processing complexity and the fact that the overlaps can be calculated make it worthwhile. Bow Tie Deletion at the aggregation zone level means that some of the aggregation zones, in particular those at the corners of a scan, are of length zero. This is seen in Table 4.4-6 and Table 4.4-7. The DPP substitutes a single 4-byte block of zeros for these zones. These aggregation zones should not be processed.

Table 4.4-6. VIIRS Number of Pixels per Aggregation Zone for Single Gain Bands – Operational Mode

Detectors	Single Gain Moderate Resolution Bands Number of Pixels in Aggregation Zones						Total Pixels
	1	2	3	4	5	6	
0	0	0	592	592	0	0	1184
1	0	368	592	592	368	0	1920
2 through 13	640	368	592	592	368	640	3200
14	0	368	592	592	368	0	1920
15	0	0	592	592	0	0	1184
Detectors	**Single Gain Imaging Bands Number of Pixels in Aggregation Zones**						**Total Pixels**
	1	2	3	4	5	6	
0, 1	0	0	1184	1184	0	0	2368
2, 3	0	736	1184	1184	736	0	3840
4 through 27	1280	736	1184	1184	736	1280	6400
28, 29	0	736	1184	1184	736	0	3840
30, 31	0	0	1184	1184	0	0	2368

Table 4.4-7. VIIRS Number of Samples per Aggregation Zones for Dual Gain Bands – Operational Mode

Detectors	Dual Gain Moderate Resolution Bands Number of Pixels in Aggregation Zones						Total Pixels
	1	2	3	4	5	6	
0	0	0	1776	1776	0	0	3552
1	0	736	1776	1776	736	0	5024
2 through 13	640	736	1776	1776	736	640	6304
14	0	736	1776	1776	736	0	5024
15	0	0	1776	1776	0	0	3552

4.4.4.1.3 Operational Mode Differential Coding & Compression

Differential encoding is performed between bands prior to compression to further reduce the amount of data. The rationale for the selection and ordering of bands for differential encoding are not presented here. Table 4.4-8 shows the band prediction table for differentially encoding

the bands. For reference, Table 4.4-8 also shows information about each of the bands, including whether they are collected at night, and key optical parameters. Table 4.4-8 also shows the actual transmission order of the bands.

Table 4.4-9 shows the processing functions that are implemented inside the "Processing for Differential Encoding" box in Figure 4.4-6 as a function of band. Note the relation of the A, B & C points.

Table 4.4-8. VIIRS Science Data Packet Band Transmission & Processing Order

Processing and Transmission Sequence	Encoded Band	Night	Wavelength (µm)	Bandwidth (µm)	Predictor Band	Wavelength (µm)	Bandwidth (µm)
1	M4	No	0.555	0.02	NONE		
2	M5	No	0.672	0.02	M4	0.555	0.02
3	M3	No	0.488	0.02	M4	0.555	0.02
4	M2	No	0.445	0.018	M3	0.488	0.02
5	M1	No	0.41	0.02	M2	0.445	0.018
6	M6	No	0.746	0.015	NONE		
7	M7	Yes	0.865	0.039	NONE		
8	M9	No	1.378	0.015	NONE		
9	M10	Yes	1.61	0.06	NONE		
10	M8	Yes	1.24	0.02	M10	1.61	0.06
11	M11	Yes *	2.25	0.05	M10	1.61	0.06
12	M13	Yes	4.05	0.155	NONE		
13	M12	Yes	3.7	0.18	NONE	4.05	0.155
14	I4	Yes	3.74	0.038	M12	3.7	0.18
15	M16	Yes	12.01	0.95	NONE		
16	M15	Yes	10.7625	1.00	NONE		
17	M14	Yes	9.55	0.30	M15	10.7625	1.00
18	I5	Yes	11.45	1.90	M15	10.7625	1.00
19	I1	No	0.64	0.08	NONE		
20	I2	No	0.865	0.039	I1	0.64	0.08
21	I3	No	1.61	0.06	I2	0.865	0.039
22	DNB	Yes	0.70	0.40	NONE		

*Band M11 is not the flight software default for Op_Night, but has to be enabled via the SET_DP_BANDINDEX_TRANSMIT command. This default was selected for compatibility with ground until Block 2.0 is installed.

Table 4.4-9. VIIRS Processing Summary for Differential Encoding

Band(s)	Output (15 bits)
M16	(M16A + M16B) / 2
Without Predictor Band	Input
With Predictor Band *	Input + (2^{14}-1) - Predictor

* Predictor Bands are specified in Table 4.4-8, but are subject to change
The outputs relate to points in Figure 4.4-6.

Lossless compression is performed on the data from all science data bands. Note that for some bands, the actual band data is compressed; for others differential data is compressed. Data is compressed by aggregation zone. Thus, since there are 6 aggregation zones per scan, there will be 6 sets of compressed data per scan for each detector. Table 4.4-10 shows the Universal Source Encoder for Space (USES, see ref. u in Section 2.2) compression algorithm parameters that are used to process the data.

Table 4.4-10. VIIRS USES Compression Information

USES Parameter	Value	Units
J	8	Samples per block
N	15	Bits per sample
Mode	Nearest_neighbor	-
BlkRef	128	Blocks per reference

Figure 4.4-9 shows the flow diagram for reconstructing the bands from the transmitted differential values. For reference, VIIRS band processing flow bands processed at night are shaded. The band reconstruction process is the same for day and night however.

There is one subtlety of the reconstruction process that is not clearly shown in Figure 4.4-9. This is the processing required when a moderate resolution band is used to reconstruct an imaging band. This is accomplished by “reusing” one moderate resolution band sample to reconstruct four nearest neighbor samples of the imaging band as shown below in Figure 4.4-10.

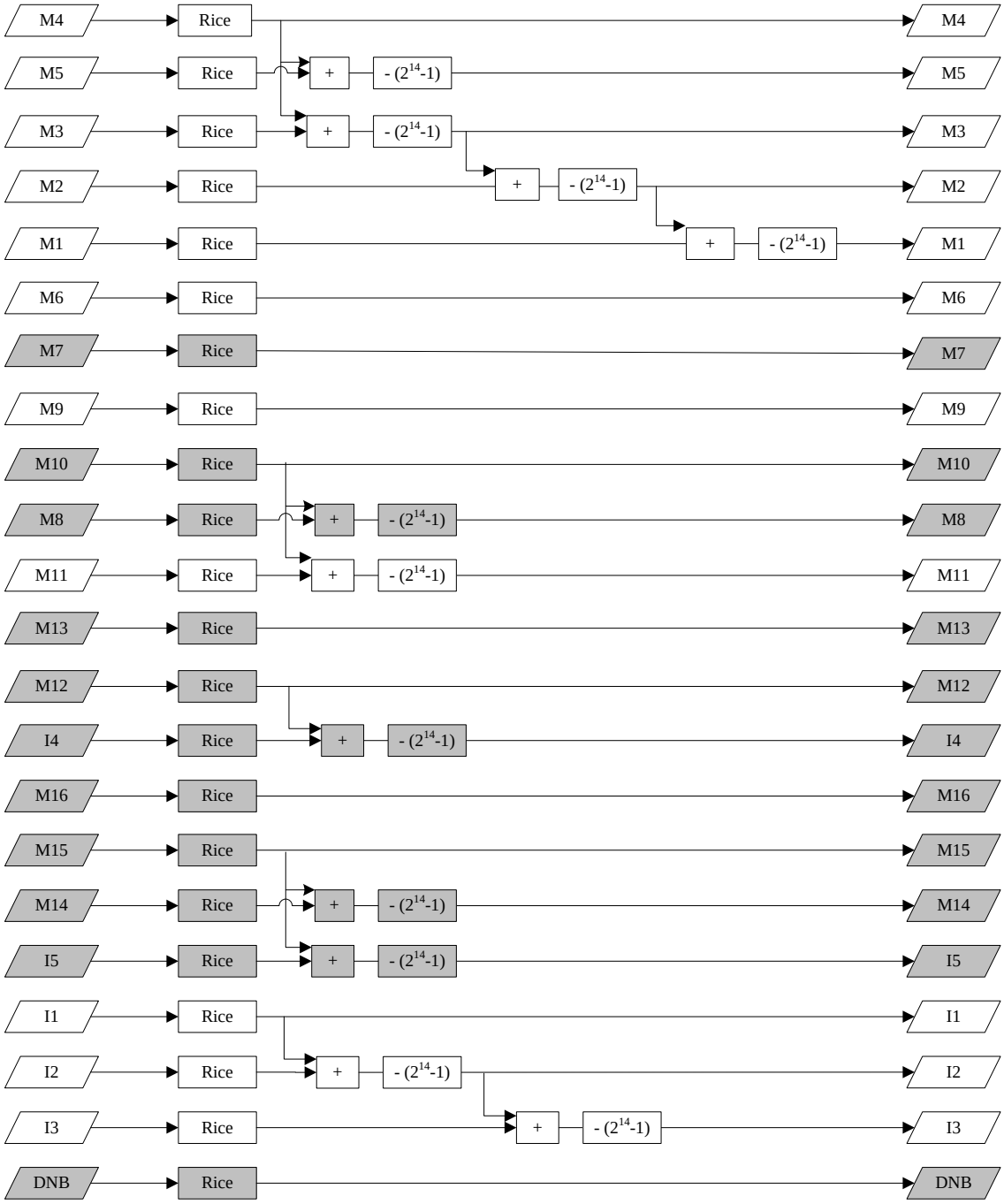

Figure 4.4-9. VIIRS Band Reconstruction Diagram

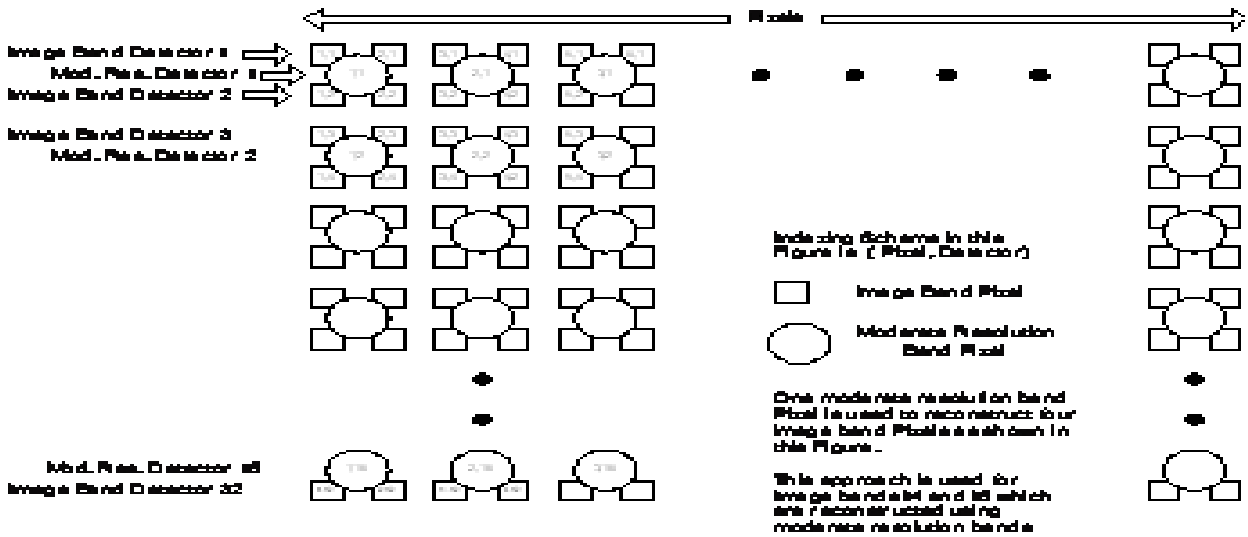

Figure 4.4-10. VIIRS Reconstruction Of Imaging Bands That Have Moderate Resolution Bands As Predictors

4.4.4.1.4 Operational Mode Arithmetic Operations

In addition to aggregation and bow tie deletion, Figure 4.4-6 also shows arithmetic operations associated with the processing of science data. The digital data representing single-gain spectral bands are processed differently from dual-gain band data. The first step for both types is to convert the 2's complement numbers into 14-bit straight binary form.

After aggregation and bow tie deletion, the single gain band 16 bit words are then truncated to 12 bits and two leading-edge zeros are added, giving 14-bit binary values, which are input to the differential encoding and compression functions.

After conversion from 2's complement form to straight binary, the data from dual-gain spectral bands are merged with the stream of "gain bits" from the focal plane array (FPA) that indicate whether each sample was taken in the high or low gain state. The gain bit is appended as a Most Significant Bit (MSB) to the beginning of each data word, yielding a 15-bit binary value. This has the effect of creating a discontinuous piecewise-linear relationship between radiance and the digital value. Because the discontinuity would reduce the efficiency of the subsequent data compression process, a constant is then subtracted from all the data words in the upper portion of the radiance range. The value subtracted for each spectral band, one of seven in the Discontinuity Offset Registers referred to in the Band Control Word of the first packet, does not totally eliminate the discontinuity, but does reduce its magnitude. This discontinuity constant is not subtracted from dual-gain detector outputs in calibration mode. The seven constant values subtracted are stored in the uploadable/downloadable DPP Register Initialization Table (VIIRS Table ID 7).

Figure 4.4-11 graphically shows the piecewise linear function that results from gain changes in the dual gain bands. The term DN (Digital Number) used in the figure refers to the binary value of the data.

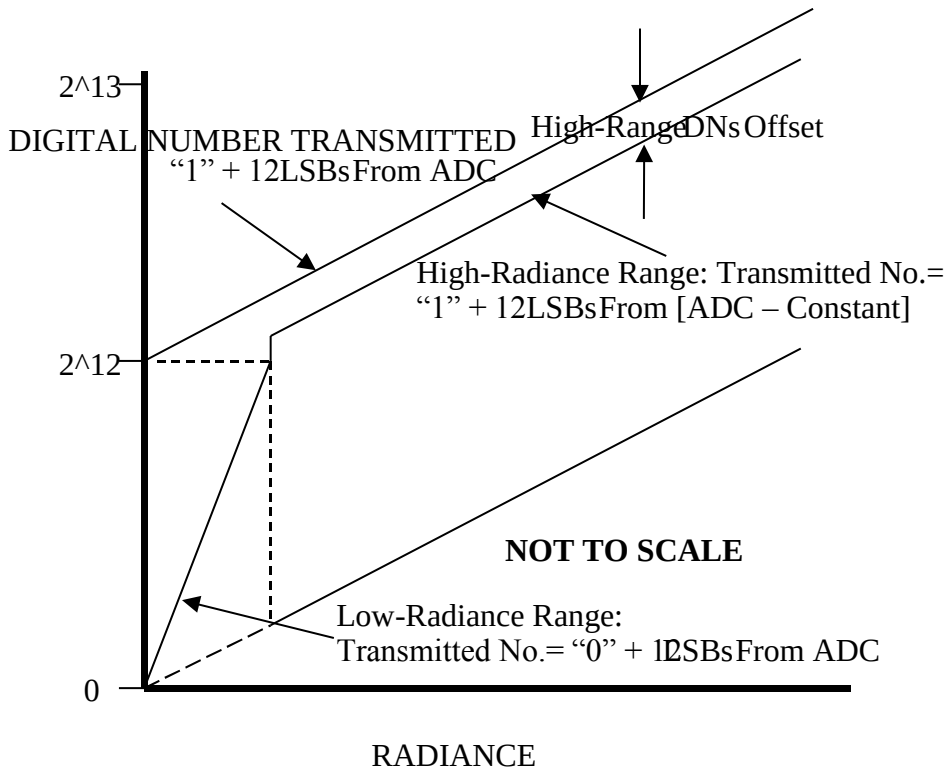

Figure 4.4-11. VIIRS Piecewise Linear Function Resulting From Dual Gain Processing & Offset Required For Correction Of Data

After bow tie deletion, the 15-bit data values are then truncated to 13 bits, so that both single- and dual-gain band data is passed to the differential encoding (described above) and compression functions as 14-bit binary words.

4.4.4.1.5 Operational Mode Packet Processing

As mentioned, there is one grouped science data packet per band. The structures of the grouped packets for APIDs 800 to 823 are shown in Figure 4.4-15, Figure 4.4-16 and Figure 4.4-17. The fields of the User Data Field are described below in Table 4.4-11 and Table 4.4-12. The fields needing additional description for packet processing are discussed below.

The first CCSDS packet of the group contains meta-data characterizing the scan and band. Its Secondary header indicated the number of packet to follow, equal to the number of detectors in the band. The Middle and Last science data CCSDS packets contain 6 subfields of data each containing the compressed pixels from one of the 6 aggregation zones associated with a scan. These data subfields are denoted as "Aggr N" on the packet diagrams

value 0 are appended to the compressed data to make the total length of the compressed "Aggr N" subfield a multiple of 32 bits. The number of bits appended can be determined by using the "Fill Data Word" in the HRD middle and last packets. See Table 4.4-12 for a description of "Fill Data Word". Prior to decompression, the appended bits must be removed from the data or the decompression will be incorrect. The length of the "Aggr N" zone is determined by the Checksum Offset field, immediately preceding the "Aggr N" data. The Checksum field (a 32-bit XOR of the data) and fixed-pattern Sync Word field follow each "Aggr N" zone. These five fields repeat six times in each Middle and Last of the grouped science packets. The value in the checksum offset field is always equal to the length of the aggregation field in bytes, plus 4. For the special case of bowtie deletion, the checksum offset field contains the value 8, namely, the 4 bytes representing the empty aggregation field, plus 4.

The process for extracting data from the HRD packets when the instrument is in Operational Mode is shown in Figure 4.4-12.

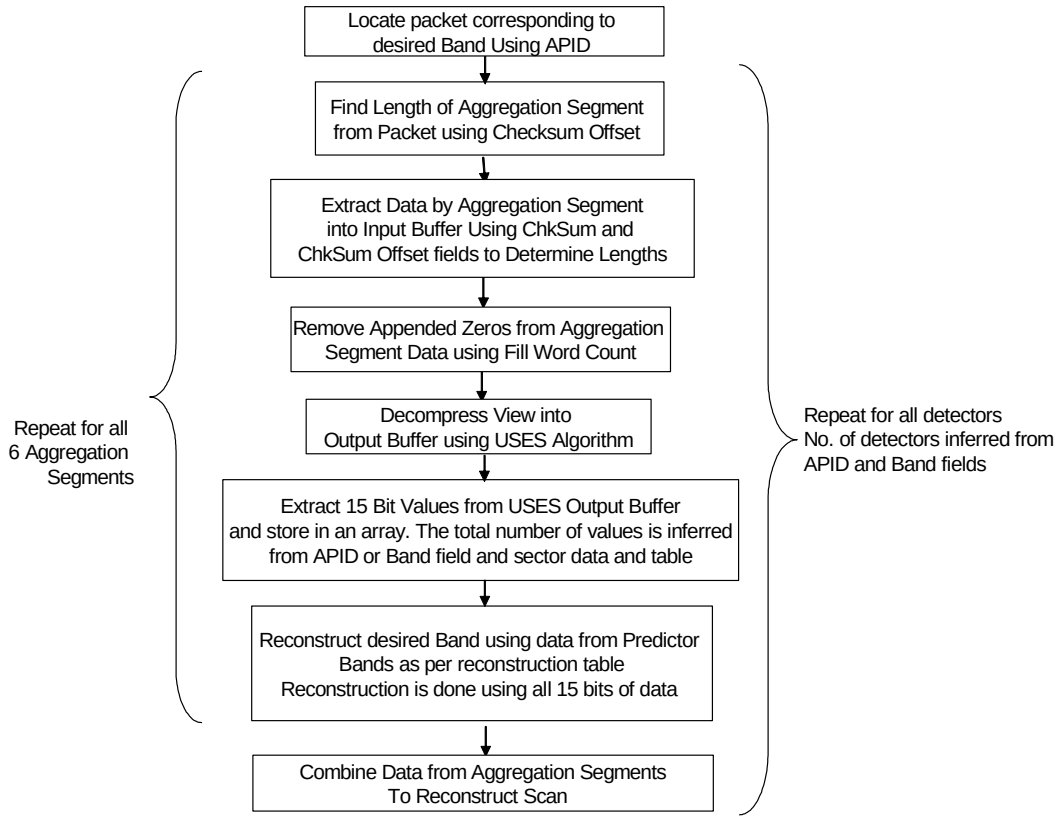

Figure 4.4-12. VIIRS Processing Flow For Extraction Of Operational Mode Data From Science Data Packets

4.4.4.1.6 Day/Night Band Processing

Although there are significant differences between the DNB and the other bands at the lowest levels of the instrument (focal plane, sub pixel, and front-end electronics), at the packet level, the DNB is actually very similar to the other bands. DNB data are output in APIDs 821-823. APID

821 is always sent and is either the High, Mid or Low gain stage DNB which is automatically selected based on scene radiance. APIDs 822 (MGS) and 823 (LGS) are only sent when commanded. The output pixels from each detector corresponding to a scan are placed in a grouped packet that has the same structure as the science data packets for the other bands, described in Figure 4.4-15 to Figure 4.4-17, Table 4.4-11 and Table 4.4-12.

The number of DNB pixels per scan in Operational Mode is equal to 4064. A scan is broken up into six "aggregation" zones as is done for the other bands. The lengths of the aggregation zones, shown in Figure 4.4-13, are unique to the DNB. In Operational mode, the pixels within an aggregation segment are compressed in the same manner as described for the other bands. Although it is not relevant to processing the packets, for completeness, Table 4.4-18 shows how the six aggregation zones are actually formed from 32 lower-level aggregation zones. The lengths of these lower level zones are determined by the geometry of the DNB focal plane array and parameters including SNR and illumination range. The data used to form the 32 lower level zones are not accessible at the packet level, but are contained in the Day Night Band Aggregation Mode Table (VIIRS Table ID 3).

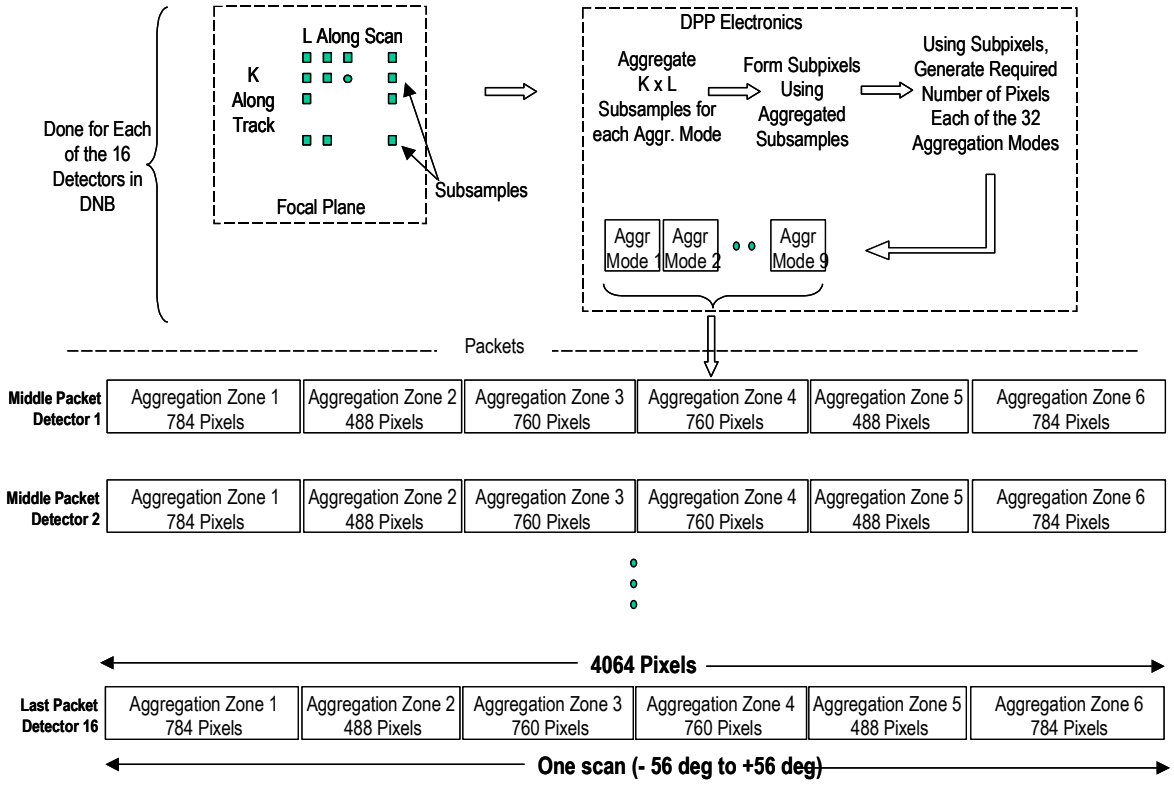

Figure 4.4-13. VIIRS Packet Structure & Definition Of Terms For Day Night Band (DNB) – Operational Mode

Figure 4.4-14 shows, at a top level, the processing for DNB data when the instrument is in Operational Mode.

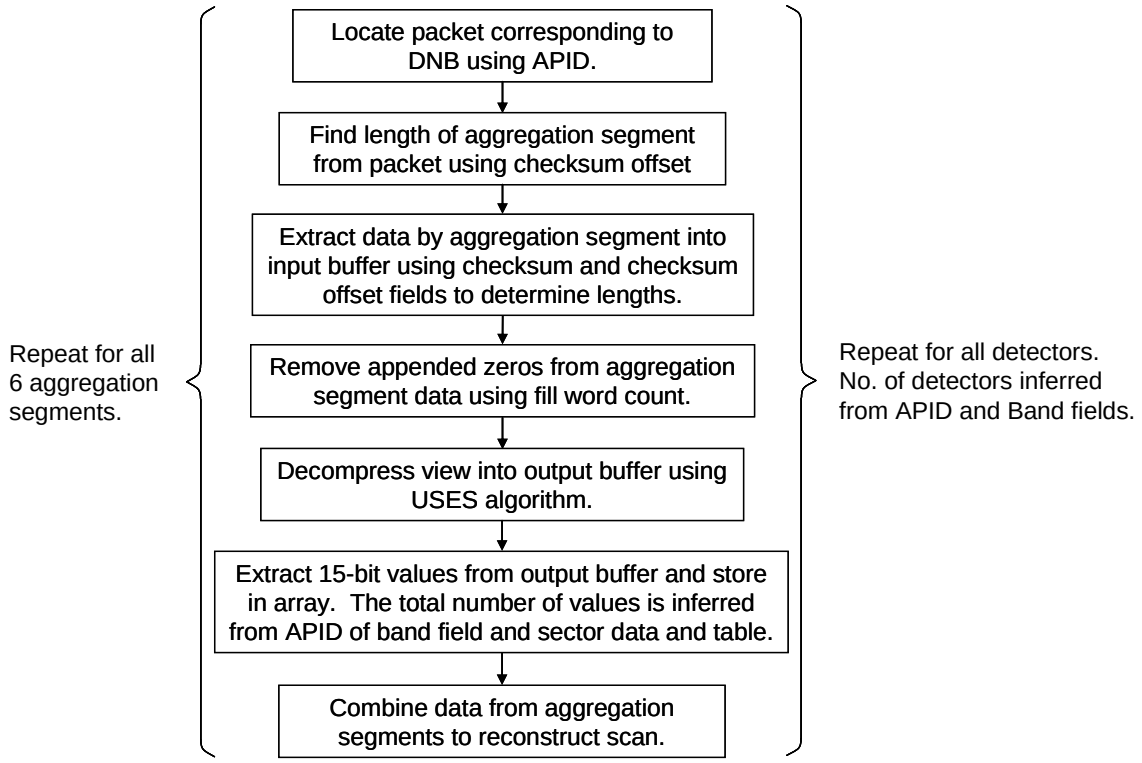

Figure 4.4-14. VIIRS DNB Processing Flow – Operational Mode

First Packet

Fixed Packet Length 180 Octets

	PACKET PRIMARY HEADER							SECONDARY HEADER			User Data Field							
	Verson No.	Packet Identification			Packet Sequence Control (PSC)		Packet Length	Time of Day -- Start of Scan	Number of Packets	Spare	VIIRS Packet ID		HR Format			HR Science Data		
		Type Indicator	Sec Hdr Flag	APID	Sequence Flags	Sequence Count					VIIRS Sequence Count	Packet Time	Format Version	Instrument Number	Spare	HR Meta Data	Checksum	TOTAL
Bits	3	1	1	11	2	14	16	64	8	8	32	64	8	8	16	1168	16	1440
Octets	2				2		2	8	1	1	4	8	1	1	2	146	2	180
Value	000	0	1	varies	01	varies	0x00AF	varies	xx_{16}	00_{16}	varies	varies	2	2	zeros	varies	varies	

0 = Telemetry Packet

1 = Secondary Header Present

Segmented data, First packet

CCSDS Day Segmented

[2] This is a running total count of all types of packets sent by VIIRS since power on or 32-bit rollover.

CCSDS Day Segmented Time packet was created (for SBRS)

16-bit arithmetic Checksum of HR Meta Data Field. The Checksum will always be 0.

	HR Meta Data														
	HAM Side	Scan Synch	Self Test Data Pattern	Reserved	Scan Number	Scan Terminus	Sensor Mode	VIIRS Model	FSW Version	Band Control Word	Partial Start	No. of Samples	Sample Delay	Reserved	TOTAL
Bits	1	1	4	10	32	64	8	8	16	32	16	16	16	944	1168
Octets	2				4	8	1	1	2	4	2	2	2	118	146
Value	varies	varies	varies	varies	varies	varies	varies	varies	varies	varies	varies	varies	varies	varies	

0000 Live Data
0001-1111 Test Data Patterns

Filled with zeros if unused

CCSDS Day Segmented

Filled with zeros if unused

Figure 4.4-15. VIIRS Science First Packet Format

Check the JPSS MIS Server at https://jpssmis.gsfc.nasa.gov/frontmenu_dsp.cfm to verify that this is the correct version prior to use.

Middle Packet

	PACKET PRIMARY HEADER							User Data Field																	
	Verson No.	Packet Identification			Packet Sequence Control (PSC)		Packet Length	VIIRS Packet ID		HR Format			HR Science Data												
		Type Indicator	Sec Hdr Flag	APID	Sequence Flags	Sequence Count		VIIRS Sequence Count	Packet Time	Format Version	Instrument Number	Spare	HR Detector Data												
Bits	3	1	1	11	2	14	16	32	64	8	8	16	varies												8	TOTAL
Octets	2				2		2	4	8	1	1	2	varies												1	varies
Value	000	0	0	varies	00	varies	varies	varies	varies	2	2	zeros	varies												zeros	varies

No Secondary Header

Middle packet of Segmented Data Definitions per A.2.2

This is a running total count of all types of packets sent by VIIRS since power on or 32-bit rollover.

Optional as needed

	Detector Data																								
	Integrity Check*	Self Test Data Pattern	Reserved	Band	Detector	Sync Word Pattern	Reserved	Fill Data	Chksum Offset	Aggr 1 or 32-17* [2]	Chksum	Sync Word	Fill Data	Chksum Offset	Aggr 2 or 16-10	Chksum	Sync Word	Fill Data	Chksum Offset	Aggr 3 or 9-Nadir	Chksum	Sync Word			
Bits	1	4	11	8	8	32	512	16	16	varies	32	32	16	16	varies	32	32	16	16	varies	32	32			
Octets	2			1	1	4	64	2	2	varies	4	4	2	2	varies	4	4	2	2	varies	4	4			
Value	varies	varies	varies	varies	varies	varies	varies	varies	varies	varies	varies	ff000061	varies	varies	varies	varies	ff000061	varies	varies	varies	varies	ff000061			

0 = No Error
1 = Data Error

Filled with zeros if unused

0 - 31 = Valid

Filled with zeros if unused

The Checksum will always be 0.

0000 Live Data
0001-1111 Test Data Patterns

	Fill Data	Chksum Offset	Aggr 3 or Nadir-9	Chksum	Sync Word	Fill Data	Chksum Offset	Aggr 2 or 10-16	Chksum	Sync Word	Fill Data	Chksum Offset	Aggr 1 or 17-32	Chksum	Sync Word	
	16	16	varies	32	32	16	16	varies	32	32	16	16	varies	32	32	varies
	2	2	varies	4	4	2	2	varies	4	4	2	2	varies	4	4	varies
	varies	varies	varies	varies	ff000061	varies	varies	varies	varies	ff000061	varies	varies	varies	varies	ff000061	

Figure 4.4-16. VIIRS Science Middle Packet Format

Last Packet

	PACKET PRIMARY HEADER							User Data Field							
	Verson No.	Packet Identification			Packet Sequence Control (PSC)		Packet Length	VIIRS Packet ID		HR Format			HR Science Data		
		Type Indicator	Sec Hdr Flag	APID	Sequence Flags	Sequence Count		VIIRS Sequence Count	Packet Time	Format Version	Instrument Number	Reserved	HR Detector Data	Pad Byte as needed	
Bits	3	1	1	11	2	14	16	32	64	8	8	16	varies	8	varies
Octets	2				2		2	4	8	1	1	2	varies	1	varies
Value	000	0	0	varies	10	varies	varies	varies	varies	2	2	zeros	varies	zeros	

No Secondary Header

Last packet of Segmented data

This is a running total count of all types of packets sent by VIIRS since power on, or 32-bit rollover.

Same format as specifed in Middle Packet description. Content will be single detector's data or continuation of band error data.

Optional as needed

Figure 4.4-17. VIIRS Science Last Packet Format

Check the JPSS MIS Server at https://jpssmis.gsfc.nasa.gov/frontmenu_dsp.cfm to verify that this is the correct version prior to use.

Table 4.4-11. VIIRS Science First Packet User Data Fields

64	End of earthscan time tag Day (16 bits)	
	MilliSeconds of Day (32 bits)	
	MicroSeconds of Day (16 bits)	
8	**VIIRS Sensor Mode States:**	
	0 = LAUNCH	
	1 = ACTIVATION	
	2 = OUTGAS	
	3 = DIAGNOSTIC	
	4 = OPERATIONAL DAY	
	5 = OPERATIONAL NIGHT	
	6 = SAFE	
8	**Mode**	
	1 = EDU Platform	
	2 = FU1 (FLIGHT UNIT 1)	
	3 = FU2	
	4 = FU3	
16	**FSW Version**	
	Bits 12-15 are instrumen: 3 for EDU, 4 for FU1…. Bit 11 is Simulator (1) or not (0). Bits 0-10 are FSW version.	
32	**DPP Band Control Word**	
	Bit Field	**Description**
	31-23	Don't Care
	22-18	Band Memory location - where in DPP memory data resides
	17-16	Active/Width Bits
		00 = Inactive
		01 = Inactive
		10 = Normal
		11 = Partial
	15-14	ASP Boards:
		00 = DNB
		01 = ASP1
		10 = ASP2
		11 = ASP3
	13-11	ASP channels
	10	Image/Moderate: 1 = Moderate, 0 = Image or DNB
	9	Stagger (Delay 3 samples for the even number of pixel rows)
	8	Single or Multi (Dual) Band: 1 = Mutli, 0 = Single
	7	Aggregation: 1 = Yes, 0 = No
	6	Bowtie: 1 = Yes, 0 = No
	5	Save as Predictor or TDI
		1 = Band stored in Scan Predictor RAM
		0 = No storage done
	4	Spectral DPCM
		1 = DPCM performed
		0 = No DPCM
	3	Dual Out Sum
		1 = Current band is averaged with the band
		stored in the Scan/Predictor RAM.
		0 = No averaging performed.
	2-0	Discontinuity Correction
		0 = NO Discontinuity offset
		1 = Discontinuity Offset Register 1
		2 = Discontinuity Offset Register 2
		3 = Discontinuity Offset Register 3
		4 = Discontinuity Offset Register 4
		5 = Discontinuity Offset Register 5
		6 = Discontinuity Offset Register 6
		7 = Discontinuity Offset Register 7
16	Partial Start values are in FSW Uploadable Table ID 7 (See Table of Contents) Fields 1 or 3 (depending on bands ONLY MEANINGFUL IN DIAGNOSTICS MODE)	
16	Number of Samples processed per Scan Interval. Theses values are found in Uploadable Table ID 7 (re: Partial Stop/Start values)	
16	From Table ID 7 (Fields 6-16)	
944	Spare	

Table 4.4-12. VIIRS Science Middle and Last Packet User Data Fields

Field Name	Field Width (Bits)	Description	
Integrity Check	1	Indicates Corrupted Detector Data: 0 = No Error, 1 = Error	
Self Test Data Pattern	4	Live Data Test Data Patterns: 0000 = Live Data, 0001-1111 Test Data patterns	
Reserved	11	Reserved Field Filled with Zeros	
Band	8	Raytheon internal data field.	
Detector	8	Current Detector within Band (Detector numbers are **1** to **N**, field is **0** to **N-1**): Moderate bands: 0 - 15 Imaging bands: 0 - 31	
Sync Word Pattern	32	Sync Verify Data Pattern : 0xFF000063	
Reserved	512	Reserved Field Filled with Zeros	
Fill Data	16	Bit Field	Description
		11	"X" Bit Field: X = 1 if the DPP inserted fill data in order to extend the last compressed data to 32 bits. For X =1, the last compressed data from the Rice ASIC is located in bits (31:16) of the last data word. For X = 0, the last compressed data from the Rice ASIC is located in bits (15:00) of the last data word.
		10 - 6	Reserved
		5 - 0	All zero's
Checksum Offset	16	8 bit byte displacement to Checksum Word	
Agg2 or 16-10	Varies		
Checksum	32	DPP Hardware generated Checksum	

4.4.4.2 Calibration Data

The VIIRS Calibration Packet (APIDs 825 and 855) contain sensor outputs from the Space, Blackbody and Solar Diffuser Views during the VIIRS scan. Both APIDs are grouped packets containing the calibration data for all bands. VIIRS outputs one grouped packet every scan (1.7864 sec). If VIIRS is in Operational Mode it outputs APID 825 but if VIIRS is in Diagnostic Mode it outputs APID 855. The APIDs are the same, except that the data are compressed in the Operational modes and are not compressed in Diagnostic mode.

An overview of the organization of the Calibration packet is shown in the Figure 4.4-18. More detailed structure diagrams are in Figure 4.4-23, Figure 4.4-25 and Figure 4.4-25 and detailed User Data Field listing is shown in Table 4.4-14. The first CCSDS packet in the grouped packet contains metadata. The 22 Middle CCSDS packets and one Last CCSDS packet each contain the calibration data for one of the 23 bands. The packet contains data from 16 or 32 detectors per band, viewing all three calibration sources (space view, blackbody, and solar diffuser). Regardless of whether VIIRS is in the day or night portion of its orbit, the calibration packet format is the same (i.e. all bands are sent). The only difference between day and night mode band content is that two day mode Moderate bands (M4 and M5) can be replaced by command (SET_DP_DN_M_L_GAIN_PKTS) with Mid and Low Gain DNB Stages (DNBMGS and DNBLGS) as shown in Table 4.4-13. This is only recommended for night mode to avoid loss of calibration data. In both day and night modes, M16A and M16B are both transmitted as separate bands (without TDI) in the calibration packets for all operating modes. Calibration dual-gain detector data does not have the discontinuity constant subtracted.

Within a middle or last CCSDS packet the data is ordered by detector and, then by view (Space, Blackbody, or Solar Diffuser) as shown in Figure 4.4-18. The length of all views for moderate bands is 48 samples, imaging bands is 96. The DNB calibration data consists of 16 samples from each of the four gain stages, making a total of 64 samples in each view. The order of the DNB stages in the packet is HGA, HGB, MGS, LGS. If the DNB is in calibration Sequence Order 35 or 36, then only 4 samples are reported in each stage for a total of 16 samples per view. There is no specific telemetry point that identifies what DNB aggregation mode is being transmitted in calibration view. Aggregation modes 35 and 36 send only 16 samples of data and can be used to sync the processing to where the VIIRS system is in the aggregation mode sequence. VIIRS changes the DNB aggregation mode every two scans and cycles through all modes in 72 scans. The sample length of all views is fixed and not programmable in software. The calibration view data (SV, BB, SD) have 14 significant bits preceded by a MSB that, depending on the band, will be a zero bit or a gain bit for a total of 15 bits per sample (see Table 4.4-13 for more details). However, the allocation of bits between gain and data information depends on the band. The value in the checksum offset field is equal to the length of the corresponding view field in bytes, plus 4.

When the instrument is in Operational Mode, the samples representing the output from each view are compressed as individual blocks of data using the USES algorithm. The details of compression and decompression of calibration data are nearly the same as for the science data packet and are shown graphically in Figure 4.4-19. One significant difference is the

Check the JPSS MIS Server at https://jpssmis.gsfc.nasa.gov/frontmenu_dsp.cfm to verify that this is the correct version prior to use.

discontinuity constant is not subtracted from dual-gain detector outputs in calibration mode. As shown in Figure 4.4-18 and Figure 4.4-19, compression is performed at the view level. After each view is compressed, zeros are appended to make the length of the compressed data a multiple of 32. Before decompression, these appended zeros must be removed. The Number of Fill Bits field associated with each view contains the number of zeros appended to the data after compression.

Table 4.4-13. VIIRS Gain, Detector, and Bit Summary for Calibration Data

[1] Band	Band Content/Mode			[2] No. Zero Bits	[3] No. Gain Bits	[4] No. Bits for Data Number	[5] Total Number of Bits	[6] No. Gain Settings	[7] No. Dets/Band	[8] No. Bits/Word
	Day	Night [9]	Diagnostic							
M1	**x**	**x**	**x**	**0**	**1**	**14**	**15**	**2**	**16**	**15**
M2	**x**	**x**	**x**	**0**	**1**	**14**	**15**	**2**	**16**	**15**
M3	**x**	**x**	**x**	**0**	**1**	**14**	**15**	**2**	**16**	**15**
M4	**x**	**[11]**	**x**	**0**	**1**	**14**	**15**	**2**	**16**	**15**
M5	**x**	**[11]**	**x**	**0**	**1**	**14**	**15**	**2**	**16**	**15**
M6	x	x	x	1	0	14	15	1	16	14
M7	**x**	**x**	**x**	**0**	**1**	**14**	**15**	**2**	**16**	**15**
M8	x	x	x	1	0	14	15	1	16	14
M9	x	x	x	1	0	14	15	1	16	14
M10	x	x	x	1	0	14	15	1	16	14
M11	x	x	x	1	0	14	15	1	16	14
M12	x	x	x	1	0	14	15	1	16	14
M13	**x**	**x**	**x**	**0**	**1**	**14**	**15**	**2**	**16**	**15**
M14	x	x	x	1	0	14	15	1	16	14
M15	x	x	x	1	0	14	15	1	16	14
M16A	x	x	x	1	0	14	15	1	16	14
M16B	x	x	x	1	0	14	15	1	16	14
I1	x	x	x	1	0	14	15	1	32	14
I2	x	x	x	1	0	14	15	1	32	14
I3	x	x	x	1	0	14	15	1	32	14
I4	x	x	x	1	0	14	15	1	32	14
I5	x	x	x	1	0	14	15	1	32	14
DNB [10] All 4 gain stages transmitted in single band packet	x	x	x	1	0	14	15	NA	16	15
DNB MGS [10] All Data is med rad/med		[11]	x	1	0	14	15	NA	16	15

gain										
DNB LGS [10] All data is high rad/low gain		[11]	x	1	0	14	15	NA	16	15

Notes

[1] The list of VIIRS Bands where I= imaging and M=Moderate
[2] The number zeros bits padded onto the calibration data to make a 15 bit word.
[3] The number of gain bits in the calibration data.
[4] Size of the calibration detector data.
[5] Total calibration data size that is packetized.
[6] Number of gain levels. 1 = Single Gain Band, 2 = Dual Gain Band
[7] The number of detectors per band.
[8] Column 8 indicates meaningful band bits before compression & after ground data recovery. For the dual gain bands (bold in the table), the following logic applies to the gain bit. If the gain bit = 0, this is a HIGH State. If the gain bit = 1, this is a LOW State. All DNB bands above Stage 1 are the most significant bit of the 14 bit value.
[9] The number of samples per view for the DNB band is 64 except for Aggregation Modes 34 and 35 when it is 16. The DNB aggregation mode in the cal view changes every 2 scans, cycling over agg. modes 1 to 36 in 72 scans. This field may also be set to zero for sensor initialization or mode transition.
[10] Due to a DNB "rise time" limitation that makes the first sample in Calibration View (CV) scans invalid, ground processing should set the first sample to 0.0 .
[11] Night mode by default sends M4/M5 calibration data, however, when commanded LGS and MGS calibration data is sent in place of M4/M5.

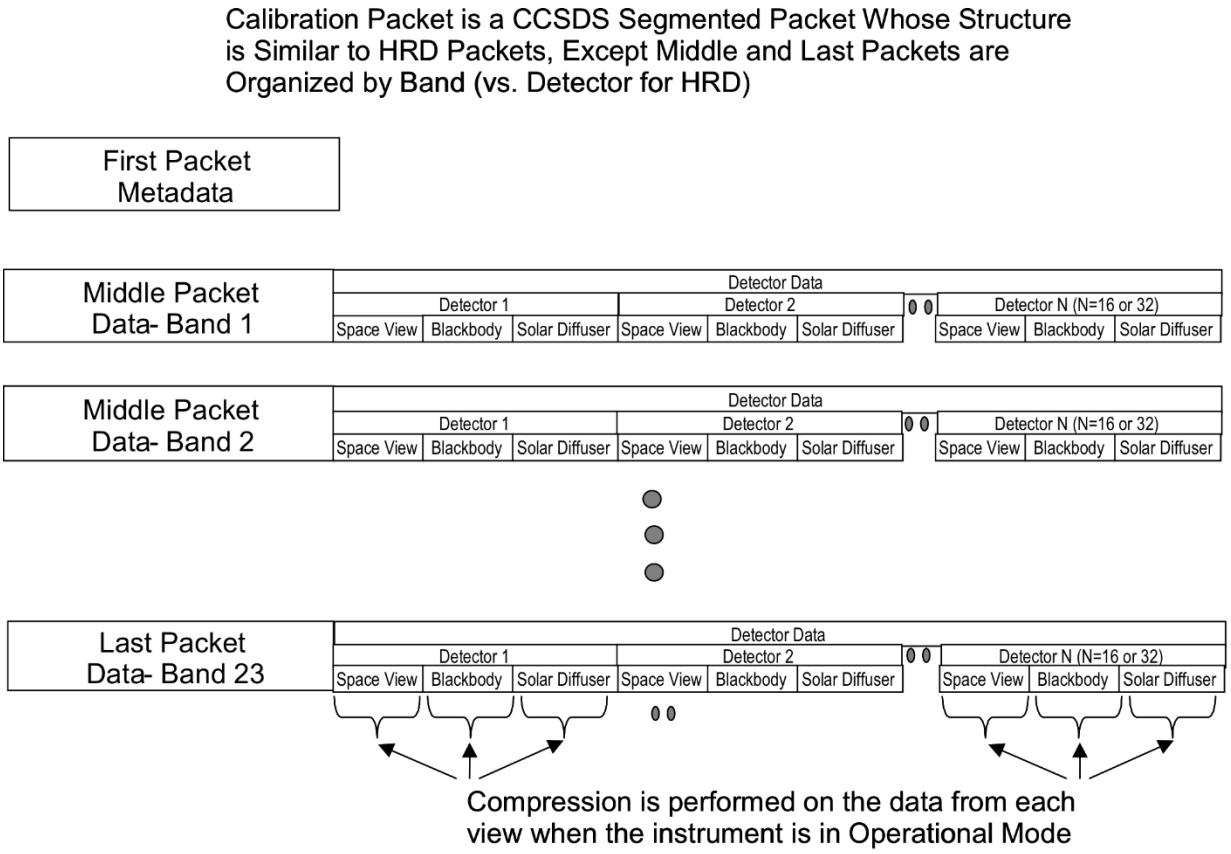

Figure 4.4-18. VIIRS Calibration Data Packet Structure

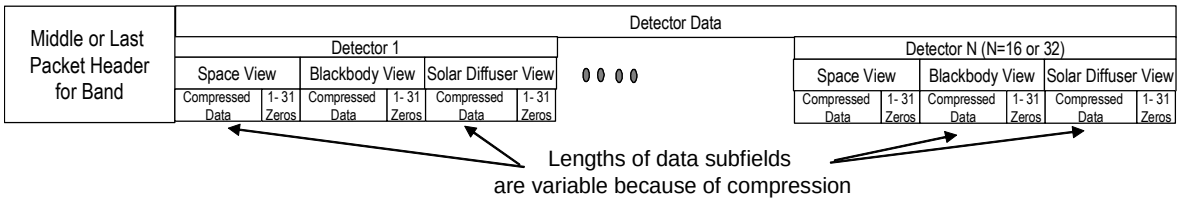

Figure 4.4-19. VIIRS Top-Level Format of Detector Field in Calibration Packet – Operational Mode

When the instrument is in Diagnostic mode, no compression is performed on the data. The length of each data word is 15 bits. The total length of the subfield containing the data from a view, in bits, is equal to 15 times the number of samples in the view. All data is packed.

The order of data is the same for Diagnostic mode as Operational Mode. Zeros are appended to the end of the data in each view to make the length of the view, in bits, a multiple of 32. The appended zeros should be removed as part of the depacketization process. The structure of the detector data field in the calibration packet for Diagnostic mode is shown in Figure 4.4-20.

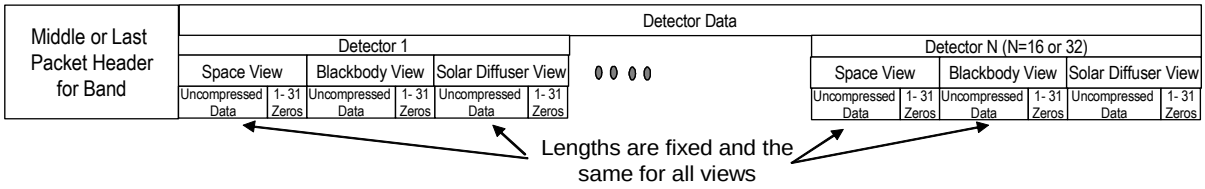

Figure 4.4-20. VIIRS Top-Level Format of Detector Data Field in Calibration Packet – Diagnostic Mode

Top level activity diagrams for processing the Calibration Packets are shown in Figure 4.4-21 and Figure 4.4-22. Figure 4.4-21 shows the processing flow for Operational Mode; Figure 4.4-22 shows the flow for Diagnostic Mode.

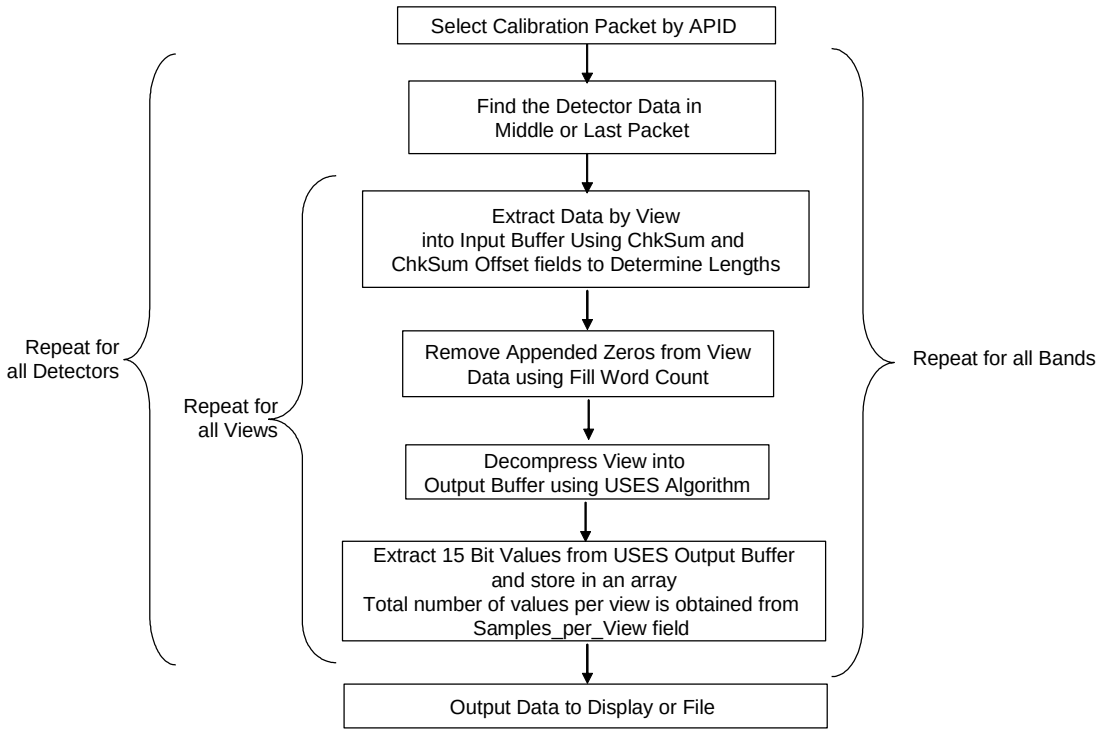

Figure 4.4-21. VIIRS Calibration Data Packet Processing – Operational Mode

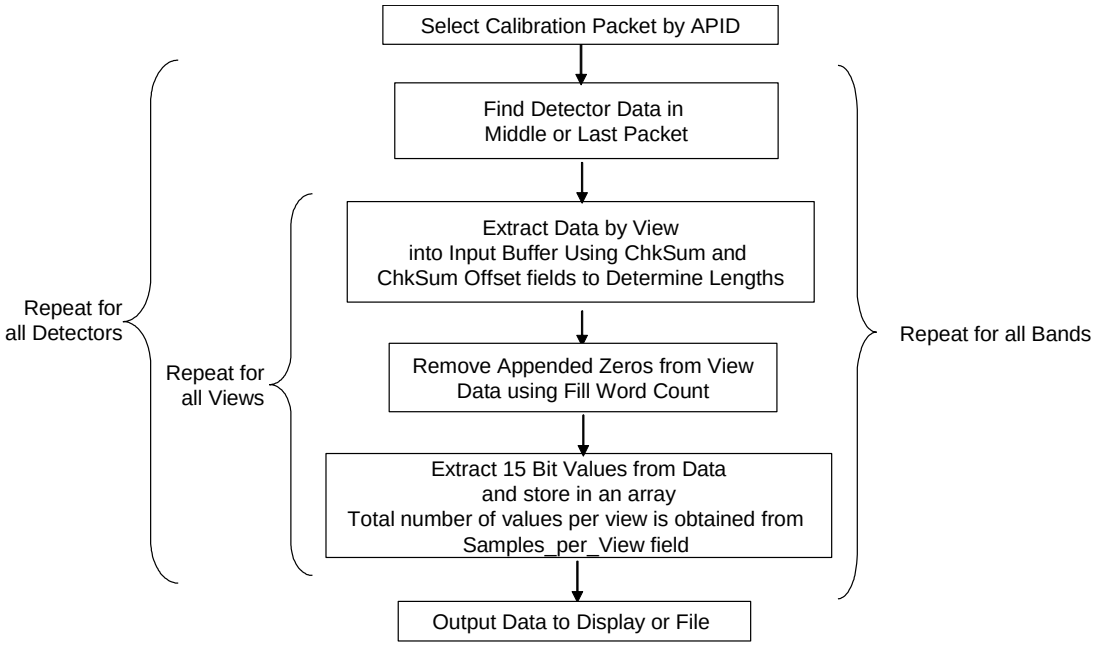

Figure 4.4-22. VIIRS Calibration Data Packet Processing – Diagnostic Mode

	PACKET PRIMARY HEADER							Secondary Header			User Data Field							
	Verson No.	Packet Identification			Packet Sequence Control (PSC)		Packet Length				VIIRS Packet ID		Cal Format			CAL Data		
		Type Indicator	Sec Hdr Flag	APID	Sequence Flags	Sequence Count		Time of Day -- Start of Scan	Number of Packets	Spare	VIIRS Sequence Count	acket Tim	Format Version	Instrument Number	Spare	CAL Meta Data	Check sum	TOTAL
Bits	3	1	1	11	2	14	16	64	8	8	32	64	8	8	16	1072	16	1344
Octets	2				2		2	8	1	1	4	8	1	1	2	134	2	168
Value	000	0	1	varies	01	varies	0x00A1	varies	varies	0	varies	varies	2	2	zeros	varies	zeros	

0 = Telemetry Packet

1 = Secondary Header Present

CAL Data may be Segmented or Unsegmented as needed.

This is a running total count of all types of packets sent by VIIRS since power on or 32-bit rollover.

	CAL Meta Data											
	HAM Side	Scan Synch	Self Test Data	DNB Sequence Number	Reserved	Scan Number	Scan Terminus	Sensor Mode	VIIRS Model	FSW Version	FSW Diagnostic	Reserved	TOTALS
Bits	1	1	4	6	4	32	64	8	8	16	32	896	1072
Octets	2					4	8	1	1	2	4	112	134
Value	varies												

Figure 4.4-23. VIIRS Calibration First Packet Format

	PACKET PRIMARY HEADER							User Data Field						
	Verson No.	Packet Identification			Packet Sequence Control (PSC)		Packet Length	VIIRS Packet ID		Cal Format			CAL Data	
		Type Indicator	Sec Hdr Flag	APID	Sequence Flags	Sequence Count		VIIRS Sequence Count	Packet Tim	Format Version	Instrument Number	Spare	CAL Data	Pad Byte as needed
Bits	3	1	1	11	2	14	16	32	64	8	8	16	varies	8
Octets	2				2		2	4	8	1	1	2	varies	1
Value	000	0	0	varies	00	varies	varies	varies	varies	2	2	zeros	varies	zeros

0 = Telemetry Packet

0 = Secondary Header Not Present

CAL Data may is Segmented.

This is a running total count of all types of packets sent by VIIRS since power on or 32-bit rollover.

CAL Data

CAL Band Data*

	Integrity Check	Self Test Data	Reserved	Band	Samples per View	Sync Word Pattern	Reserved	Band Data Word	Detector Data** Fill Data	Checksum Offset	Compressed Space View	Space View Check sum	Space View Sync	Fill Data	Checksum Offset	Compressed Blackbody	BB View Check sum	BB View Sync Verify	Fill Data	Checksum Offset	Compressed SD View	SD View Checksum	SD View Sync Verify	...	Compressed SD View	SD View Checksum	SD View Sync Verify
	1	4	11	8	8	32	512	32	16	16	varies	32	32	16	16	varies	32	32	16	16	varies	32	32		varies	32	32
	2			1	1	4	64	4	2	2	varies	4	4	2	2	varies	4	4	2	2	varies	4	4		varies	4	4
	varies	varies	varies	varies	varies	varies	varies	varies	varies	varies	varies	varies	varies	varies	varies	varies	varies	varies	varies	varies	varies	varies	varies		varies	varies	varies

* CAL Band Data is Repeated for All Active Bands

0000 Live Data
0001-1111 Test Data Patterns

** Detector Data is Repeated for All Detectors of a Band (16 or 32)

Band
Detector
View
Space
BB
SD

In Diagnostic Mode, the length of the View fields is fixed and depends on the Samples Per View field for this band.
The default lengths (including zero bits to make the field length a multiple of 32 bits) follow:

DNB	960 bits	/ 120 octets
DNB (agg 35/36)	256 bits	/ 32 octets
Moderate Bands	736 bits	/ 92 octets
Imaging Bands	1440 bits	/ 180 octets

Figure 4.4-24. VIIRS Calibration Middle Packet Format

Check the JPSS MIS Server at https://jpssmis.gsfc.nasa.gov/frontmenu_dsp.cfm to verify that this is the correct version prior to use.

	PACKET PRIMARY HEADER							User Data Field							
	Verson No.	Packet Identification			Packet Sequence Control (PSC)		Packet Length	VIIRS Packet ID		Cal Format			CAL Data		
		Type Indicator	Sec Hdr Flag	APID	Sequence Flags	Sequence Count		VIIRS Sequence Count	Packet Time	Format Version	Instrument Number	Spare	CAL Data	Pad Byte as needed	Total
Bits	3	1	1	11	2	14	16	32	64	8	8	16	varies	8	varies
Octets	2				2		2	4	8	1	1	2	varies	1	varies
Value	000	0	0	varies	10	varies	varies	varies	varies	2	2	zeros	varies	zeros	

0 = Telemetry Packet

0 = Secondary Header Not Present

This is a running total count of all types of packets sent by VIIRS since power on or 32-bit rollover.

Start of Scan Time 64-bit CCSDS Day Segmented Time Code Format as defined in CCSDS 301.0-B-2. 8-bit P-Field and 56-bit T-Field. Microsecond resolution.

Format is the same as the middle packet. In Diagnostic Mode, the length of the CAL Data field is fixed and depends on the Samples Per View field for the final band.
The default lengths follow:

DNB	2188 or 6412 octets
Moderate Resolution bands	5068 octets
Imaging Resolution bands	18508 octets

Figure 4.4-25. VIIRS Calibration Last Packet Format

Table 4.4-14. VIIRS Calibration Packet User Data Fields (First then Middle/Last)

Field Name	Field Width (Bits)	Description
HAM Side	1	0 = HAM Side A ; 1 = HAM Side B
Sync Scan	1	0 = Servo OFF ; 1 = Servo ON and Synchronized
Self Test Data Pat	4	Tracks Science Mode: 0000 = Live Data; 0001-1111 = Test Pattern Data
DNB Agg Mode	6	Day Night Band Aggregation Mode Value between 1 and 36.
Reserved	4	
Scan Number	32	Current Scan Number: Min = 0; Max = 0xFFFFFFFF
Scan Terminus	64	End of earthscan time tag Day (16 bits)
		MilliSeconds of Day (32 bits)
		MicroSeconds of Day (16 bits)
Sensor Mode	8	VIIRS Sensor Mode States:
		0 = LAUNCH
		1 = ACTIVATION
		2 = OUTGAS
		3 = DIAGNOSTIC
		4 = OPERATIONAL DAY
		5 = OPERATIONAL NIGHT
		6 = SAFE
VIIRS Model	8	1 = EDU Platform
		2 = FU1 (FLIGHT UNIT 1)
		3 = FU2
		4 = FU3
FSW Version	16	Bits 12-15 are instrument: 3 for EDU, 4 for FU1…. Bit 11 is Simulator (1) or not (0). Bits 0-10 are FSW version.
FSW Diagnostic	32	FSW source code defines this field as uiCalStatus, and sets its value to fstCalBP[uiBandId].uiBandIdBaseAddr . This is the band Id base address (local memory) of the DPP LossLess Acq RAM data read from DPP memory.
Reserved	896	Spare

Description
Indicates Corrupted Detector Data: 0 = No Error, 1 = Error
Live Data Test Data Patterns: 0000 = Live Data, 0001-1111 Test Data patterns
Reserved Field Filled with Zeros
Raytheon internal data field.
Samples per View parameter: 48. Re: EDD154640-101, Section A.10 "Calibration Data Packet"
Sync Verify Data Pattern : 0xFF000063
Reserved Field Filled with Zeros
DPP Band Control Word

Bit Field	Description
31-23	Don't Care
22-18	Band location - where in DPP memory data resides
17-16	Active/Width Bits: 00,01 = Inactive
	00 = Inactive
	01 = Inactive
	10 = Normal
	11 = Partial
15-14	ASP Boards:
	00 = DNB
	01 = ASP1
	10 = ASP2
	11 = ASP3
13-11	ASP channels
10	Image/Moderate: 1 = Moderate, 0 = Image or DNB
9	Stagger (Delay 3 samples for the even number of pixel rows)
8	Single or Multi (Dual) Band: 1 = Mutli, 0 = Single
7	Aggregation: 1 = Yes, 0 = No
6	Bowtie: 1 = Yes, 0 = No
5	Save as Predictor or TDI
	1 = Band stored in Scan Predictor RAM
	0 = No storage done
4	Spectral DPCM
	1 = DPCM performed
	0 = No DPCM
3	Dual Out Sum
	1 = Current band is averaged with the band
	stored in the Scan/Predictor RAM.
	0 = No averaging performed.
2-0	Discontinuity Correction
	0 = NO Discontinuity offset
	1 = Discontinuity Offset Register 1
	2 = Discontinuity Offset Register 2
	3 = Discontinuity Offset Register 3
	4 = Discontinuity Offset Register 4
	5 = Discontinuity Offset Register 5
	6 = Discontinuity Offset Register 6
	7 = Discontinuity Offset Register 7

Bit Field	Description
11	"X" Bit Field:
	X = 1 if the DPP inserted fill data in order to extend the last compressed data to 32 bits.
	For X =1, the last compressed data from the Rice ASIC is located in bits (31:16) of the last data word.
	For X = 0, the last compressed data from the Rice ASIC is located in bits (15:00) of the last data word.
10 - 6	Reserved
5 - 0	All zero's

32 bit Word displacement to Checksum Word
DPP Hardware generated Checksum
Sync Verify Data Pattern : 0xFF000063

Check the JPSS MIS Server at https://jpssmis.gsfc.nasa.gov/frontmenu_dsp.cfm to verify that this is the correct version prior to use.

Engineering Data

The VIIRS outputs Engineering data once per scan in APIDs 826 or 856 in Operational or Diagnostic mode respectively. The two APIDs have identical formats, illustrated in Figure 4.4-26. Table 4.4-15 lists the user data fields for APIDs 826 and 856.

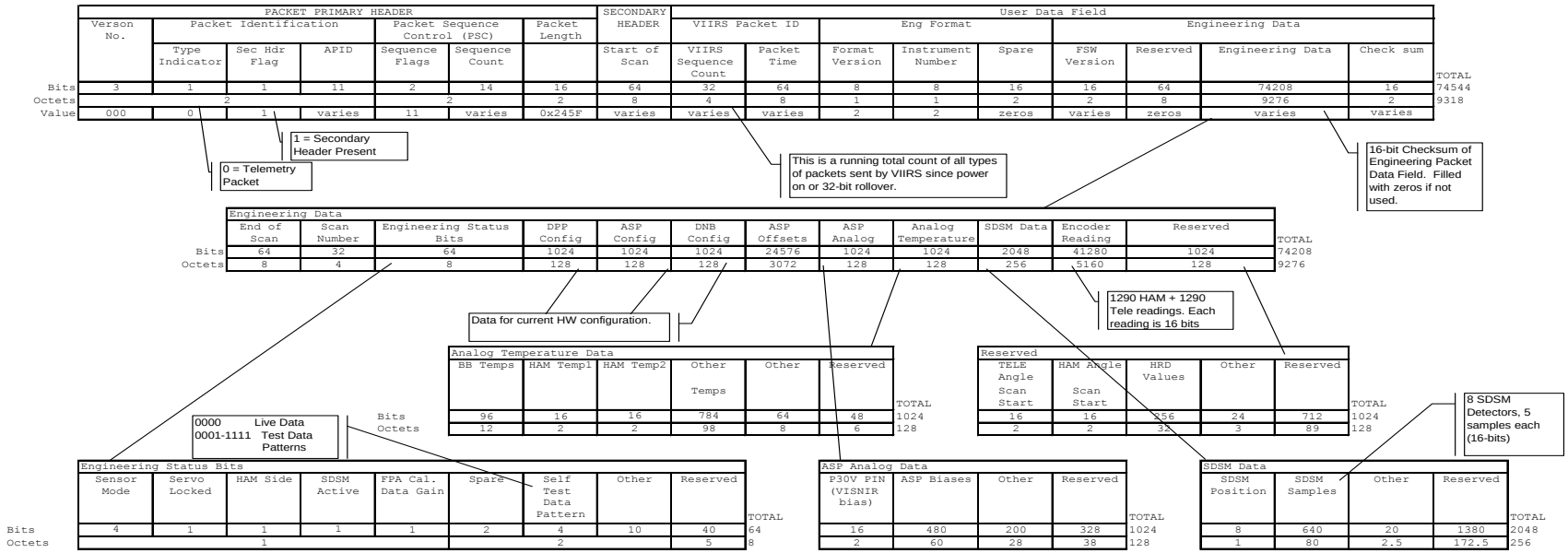

Figure 4.4-26. VIIRS Engineering Data Packet Format

Table 4.4-15. VIIRS engineering packet descriptions

[1] Ops Use T_ID	[2] DB ID LRV	[3] Engineering Mnemonic (23 Char Max)	[4] # of Bits	[5] Telemetry Range	[6] Anlg SF and Limits	[7] Descriptions/Definitions	[8] CTA Addr(h)
AP =ASP = ANALOG SIGNAL PROCESSOR							
E_AP0887	1,101	V_AP_LW_VDET_COM1	14	-2.5 to 2.5 V	NOTE [6]	Digital number of the ASP bias.	3008
E_AP0888	1,102	V_AP_LW_VDET_COM2	14	-2.5 to 2.5 V	NOTE [6]	Digital number of the ASP bias.	3009
E_AP0889	1,103	V_AP_LW_VR_CLAMP	14	-2.5 to 2.5 V	NOTE [6]	Digital number of the ASP bias.	300A
E_AP0890	1,104	V_AP_LW_VI_CLAMP	14	-2.5 to 2.5 V	NOTE [6]	Digital number of the ASP bias.	300B
E_AP0891	1,105	V_AP_LW_VPO	14	-2.5 to 2.5 V	NOTE [6]	Digital number of the ASP bias.	300C
E_AP0892	1,106	V_AP_LW_VNA	14	-6.3 to 6.3 V	NOTE [6]	Digital number of the ASP bias.	300D
E_AP0893	1,107	V_AP_LW_VND	14	-6.3 to 6.3 V	NOTE [6]	Digital number of the ASP bias.	300E
E_AP0894	1,108	V_AP_LW_VN_STAT	14	-8.0 to 8.0 V	NOTE [6]	Digital number of the ASP bias.	300F
E_AP0897	1,109	V_AP_SM_VNRST	14	-3.7 to 3.7 V	NOTE [6]	Digital number of the ASP bias.	3018
E_AP0898	1,110	V_AP_SM_FIXED_BIAS_2	14	-2.5 to 2.5 V	NOTE [6]	Digital number of the ASP bias.	3019
E_AP0899	1,111	V_AP_SM_VR_CLAMP	14	-2.5 to 2.5 V	NOTE [6]	Digital number of the ASP bias.	301A
E_AP0900	1,112	V_AP_SM_VI_CLAMP	14	-2.5 to 2.5 V	NOTE [6]	Digital number of the ASP bias.	301B
E_AP0901	1,113	V_AP_SM_VPO	14	-2.5 to 2.5 V	NOTE [6]	Digital number of the ASP bias.	301C
E_AP0902	1,114	V_AP_SM_VNA	14	-6.3 to 6.3 V	NOTE [6]	Digital number of the ASP bias.	301D
E_AP0903	1,115	V_AP_SM_VND	14	-6.3 to 6.3 V	NOTE [6]	Digital number of the ASP bias.	301E
E_AP0904	1,116	V_AP_SM_VN_STAT	14	-8.0 to 8.0 V	NOTE [6]	Digital number of the ASP bias.	301F
E_AP0907	1,117	V_AP_VN_VDET_COM1	14	-34.3 to 34.3 V	NOTE [6]	Digital number of the ASP bias.	3028
E_AP0908	1,118	V_AP_VN_VDET_COM2	14	-2.5 to 2.5 V	NOTE [6]	Digital number of the ASP bias.	3029
E_AP0909	1,119	V_AP_VN_VR_CLAMP	14	-2.5 to 2.5 V	NOTE [6]	Digital number of the ASP bias.	302A
E_AP0910	1,120	V_AP_VN_VI_CLAMP	14	-2.5 to 2.5 V	NOTE [6]	Digital number of the ASP bias.	302B
E_AP0911	1,121	V_AP_VN_VPO	14	-2.5 to 2.5 V	NOTE [6]	Digital number of the ASP bias.	302C
E_AP0912	1,122	V_AP_VN_VNA	14	-6.3 to 6.3 V	NOTE [6]	Digital number of the ASP bias.	302D
E_AP0913	1,123	V_AP_VN_VND	14	-6.3 to 6.3 V	NOTE [6]	Digital number of the ASP bias.	302E
E_AP0914	1,124	V_AP_VN_VN_STAT	14	-8.0 to 8.0 V	NOTE [6]	Digital number of the ASP bias.	302F
E_AP0005	21,003	EC_AP_DC_RESTORE	1	na	na	ASP global DC Restore 0=OFF, 1=ON	na

Table 4.4-15. VIIRS engineering packet descriptions

[1] Ops Use T_ID	[2] DB ID LRV	[3] Engineering Mnemonic (23 Char Max)	[4] # of Bits	[5] Telemetry Range	[6] Anlg SF and Limits	[7] Descriptions/Definitions	[8] CTA Addr(h)
E_AP0010	21,004	EC_AP_FPA_ST_3_OPS	2	na	na	ASP FPA Self Test Ops. Echos cmd C_AP05 0=DISABLED (normal state), 1=IMAGING (ST w/Imaging timing), 2=MODERATE (ST w/Moderate timing). bb=0, 1, 2, 3 invalid	na
E_AP0006	21,005	EC_AP_DET_CONNECTED	1	na	na	ASP Detector state 0=DISCONNECTED, 1=CONNECTED	na
E_AP0008	21,006	EC_AP_DUAL_GAIN_3_OPS	2	na	na	ASP Dual Gain Ops (5 bands). Echos cmd C_AP07 0=AUTO_GAIN (normal), 1=LOW_GAIN, 2=HIGH_GAIN. bb=0, 1, 2, 3 invalid	na
E_AP0007	21,007	EC_AP_LW_IFS_WIDTH	6	2 to 16	na	Indication of LW imaging integration Ticks by Imaging Frame Sync width. FSW echo, see Cmd C_AP10a description. Useful range in [5]	na
E_AP0009	21,008	EC_AP_LW_RFS_WIDTH	6	2 to 36	na	Indication of LW radiometric integration Ticks by Radiometric Frame Sync width. FSW echo, see Cmd C_AP10b description. Useful range in [5]	na
E_AP0011	21,009	EC_AP_SM_IFS_WIDTH	6	2 to 15	na	Indirect indication of SM imaging integration Ticks by Imaging Frame Sync width. FSW echo, see Cmd C_AP13a description.	na
E_AP0012	21,010	EC_AP_SM_RFS_WIDTH	6	2 to 35	na	Indication of SM radiometric integration Ticks by Radiometric Frame Sync width. FSW echo, see Cmd C_AP13b description. Useful range in [5]	na
E_AP0013	21,011	EC_AP_VN_IFS_WIDTH	6	2 to 15	na	Indication of VN imaging integration Ticks by Imaging Frame Sync width. FSW echo, see Cmd C_AP16a description. Useful range in [5]	na
E_AP0014	21,012	EC_AP_VN_RFS_WIDTH	6	2 to 35	na	Indication of VN radiometric integration Ticks by Radiometric Frame Sync width. FSW echo, see Cmd C_AP16b description. Useful range in [5]	na
E_AP0919	21,013	EV_AP_LW_VDET_ADJ	14	-6.6 to 6.6 V	NOTE [6]	LWIR FPA ADJ Bias 2. See Note [11].	3006
E_AP0918	21,014	EV_AP_LW_VAB_ADJ	14	-6.6 to 6.6 V	NOTE [6]	LWIR FPA ADJ Bias 1. See Note [11].	3005

Check the JPSS MIS Server at https://jpssmis.gsfc.nasa.gov/frontmenu_dsp.cfm to verify that this is the correct version prior to use.

Table 4.4-15. VIIRS engineering packet descriptions

[1] Ops Use T_ID	[2] DB ID LRV	[3] Engineering Mnemonic (23 Char Max)	[4] # of Bits	[5] Telemetry Range	[6] Anlg SF and Limits	[7] Descriptions/Definitions	[8] CTA Addr(h)
E_AP0915	21,015	EC_AP_LW_SELFTEST_VB	12	-5.3 to 0.3 V	NOTE [6]	FSW echo of Vbase value in part of cmd C_AP10 LWIR FPA Self Test = 0 to 4095DN. V=-5.3+6(DN/4095)	na
E_AP0916	21,016	EC_AP_LW_SELFTEST_VS_CM	12	-5.3 to 0.3 V	NOTE [6]	FSW echo of Vstep value in part of cmd C_AP10 LWIR FPA Self Test = 0 to 4095DN. V=-5.3+6(DN/4095)	na
E_AP0917	21,017	EV_AP_LW_SELFTEST_VS_TL	14	-6.6 to 6.6 V	NOTE [6]	HW tlmy of Vstep.	3007
E_AP0924	21,018	EV_AP_SM_DGAIN_SW_VREF	14	-6.6 to 6.6 V	NOTE [6]	Digital value for ASP bias controlling high to low gain switch point for SMWIR dual gain band. See Note [11].	3016
E_AP0923	21,019	EV_AP_SM_VAB_ADJ	14	-6.6 to 6.6 V	NOTE [6]	S/MWIR FPA VADJ Bias 1. See Note [11].	3015
E_AP0920	21,020	EC_AP_SM_SELFTEST_VB	12	-5.3 to 0.3 V	NOTE [6]	FSW echo of Vbase value in part of cmd C_AP13 SMIR FPA Self Test	na
E_AP0921	21,021	EC_AP_SM_SELFTEST_VS_CM	12	-5.3 to 0.3 V	NOTE [6]	FSW echo of Vstep value in part cmd C_AP13 SMIR FPA Self Test	na
E_AP0922	21,022	EV_AP_SM_SELFTEST_VS_TL	14	-6.6 to 6.6 V	NOTE [6]	HW tlmy of Vstep.	3017
E_AP0906	21,023	EV_AP_VN_DGAIN_SW_VREF	14	-6.6 to 6.6 V	NOTE [6]	Digital number of the ASP bias.	3026
E_AP0940	21,048	EC_AP_VN_VREF_INHIBIT	12	-5.2 to 0.2 V	NOTE [6]	FSW echo of VREF value in part of cmd C_AP24 C_AP_VN_VREF_INHIBIT	na
E_AP0928	21,024	EV_AP_VN_VAB_ADJ	14	-6.6 to 6.6 V	NOTE [6]	VIS/NIR FPA VADJ Bias 1. See Note [11].	3025
E_AP0925	21,025	EC_AP_VN_SELFTEST_VB	12	-5.3 to 0.3 V	NOTE [6]	FSW echo of Vbase value in part of cmd C_AP16 VIS/NIR FPA Self Test	na
E_AP0926	21,026	EC_AP_VN_SELFTEST_VS_CM	12	-5.3 to 0.3 V	NOTE [6]	FSW echo of Vstep value in part of cmd C_AP16 VIS/NIR FPA Self Test	na
E_AP0927	21,027	EV_AP_VN_SELFTEST_VS_TL	14	-6.6 to 6.6 V	NOTE [6]	HW tlmy of Vstep.	3027
E_AP0974	21,028	ETP_AP_LW_CCA	14	-70 to 120 °C	NOTE [6]	LWIR CCA Thermistor 01	42E0
E_AP0975	21,029	ETP_AP_SM_CCA	14	-70 to 120 °C	NOTE [6]	S/MWIR CCA Thermistor 02	42E1
E_AP0976	21,030	ETP_AP_VN_CCA	14	-70 to 120 °C	NOTE [6]	VIS/NIR CCA Thermistor 03	42E2
E_AP0884	21,041	EV_AP_P30_VISPIN	14	-34.3 to 34.3 V	NOTE [6]	VIS/NIR P30_VISPIN backplane source	303F

Table 4.4-15. VIIRS engineering packet descriptions

[1] Ops Use T_ID	[2] DB ID LRV	[3] Engineering Mnemonic (23 Char Max)	[4] # of Bits	[5] Telemetry Range	[6] Anlg SF and Limits	[7] Descriptions/Definitions	[8] CTA Addr(h)
E_AP0001	21,200	C_AP_VISNIR_REG_TBL_REV	8	na	na	Indicates which table revision you are on for the VISNIR register table. Start with 0 and increase by 1. Reboot starts at 0.	na
E_AP0002	21,201	C_AP_SMWIR_REG_TBL_REV	8	na	na	Indicates which table revision you are on for the SMWIR register table. Start with 0 and increase by 1. Reboot starts at 0.	na
E_AP0003	21,202	C_AP_LWIR_REG_TBL_REV	8	na	na	Indicates which table revision you are on for the LWIR register table. Start with 0 and increase by 1. Reboot starts at 0.	na
E_AP0004	21,203	C_AP_FPA_IDEAL_TBL_REV	8	na	na	Indicates which table revision you are on for the FPA ideal offsets table. Start with 0 and increase by 1. Reboot starts at 0.	na
E_AP0020 - E_AP0035	21,204-21,219	C_AP_M1_HAM0_DET01 - C_AP_M1_HAM0_DET16	16	na	na	Indicates the offset values for the FPA electronics.	na
E_AP0036 - E_AP0051	21,220-21,235	C_AP_M2_HAM0_DET01 - C_AP_M2_HAM0_DET16	16	na	na	Indicates the offset values for the FPA electronics.	na
E_AP0052 - E_AP0067	21,236-21,251	C_AP_M3_HAM0_DET01 - C_AP_M3_HAM0_DET16	16	na	na	Indicates the offset values for the FPA electronics.	na
E_AP0068 - E_AP0083	21,252-21,267	C_AP_M4_HAM0_DET01 - C_AP_M4_HAM0_DET16	16	na	na	Indicates the offset values for the FPA electronics.	na
E_AP0084- E_AP0099	21,268-21,283	C_AP_M5_HAM0_DET01 - C_AP_M5_HAM0_DET16	16	na	na	Indicates the offset values for the FPA electronics.	na
E_AP0100 - E_AP0115	21,284-21,299	C_AP_M6_HAM0_DET01 - C_AP_M6_HAM0_DET16	16	na	na	Indicates the offset values for the FPA electronics.	na
E_AP0116 - E_AP0131	21,300-21,315	C_AP_M7_HAM0_DET01 - C_AP_M7_HAM0_DET16	16	na	na	Indicates the offset values for the FPA electronics.	na
E_AP0132 - E_AP0147	21,316-21,331	C_AP_M8_HAM0_DET01 - C_AP_M8_HAM0_DET16	16	na	na	Indicates the offset values for the FPA electronics.	na
E_AP0148 - E_AP0163	21,332-21,347	C_AP_M9_HAM0_DET01 - C_AP_M9_HAM0_DET16	16	na	na	Indicates the offset values for the FPA electronics.	na

Check the JPSS MIS Server at https://jpssmis.gsfc.nasa.gov/frontmenu_dsp.cfm to verify that this is the correct version prior to use.

Table 4.4-15. VIIRS engineering packet descriptions

[1] Ops Use T_ID	[2] DB ID LRV	[3] Engineering Mnemonic (23 Char Max)	[4] # of Bits	[5] Telemetry Range	[6] Anlg SF and Limits	[7] Descriptions/Definitions	[8] CTA Addr(h)
E_AP0164-E_AP0179	21,348-21,363	C_AP_M10_HAM0_DET01 - C_AP_M10_HAM0_DET16	16	na	na	Indicates the offset values for the FPA electronics.	na
E_AP0180 - E_AP0195	21,364-21,379	C_AP_M11_HAM0_DET01 - C_AP_M11_HAM0_DET16	16	na	na	Indicates the offset values for the FPA electronics.	na
E_AP0196 - E_AP0211	21,380-21,395	C_AP_M12_HAM0_DET01 - C_AP_M12_HAM0_DET16	16	na	na	Indicates the offset values for the FPA electronics.	na
E_AP0212 - E_AP0227	21,396-21,411	C_AP_M13_HAM0_DET01 - C_AP_M13_HAM0_DET16	16	na	na	Indicates the offset values for the FPA electronics.	na
E_AP0228 - E_AP0243	21,412-21,427	C_AP_M14_HAM0_DET01 - C_AP_M14_HAM0_DET16	16	na	na	Indicates the offset values for the FPA electronics.	na
E_AP0244 - E_AP0259	21,428-21,443	C_AP_M15_HAM0_DET01 - C_AP_M15_HAM0_DET16	16	na	na	Indicates the offset values for the FPA electronics.	na
E_AP0260 - E_AP0275	21,444-21,459	C_AP_M16A_HAM0_DET01 - C_AP_M16A_HAM0_DET16	16	na	na	Indicates the offset values for the FPA electronics.	na
E_AP0276 - E_AP0291	21,460-21,475	C_AP_M16B_HAM0_DET01 - C_AP_M16B_HAM0_DET16	16	na	na	Indicates the offset values for the FPA electronics.	na
E_AP0292 - E_AP0307	21,476-21,491	C_AP_I1E_HAM0_DET01 - C_AP_I1E_HAM0_DET16	16	na	na	Indicates the offset values for the FPA electronics.	na
E_AP0308 - E_AP0323	21,492-21,507	C_AP_I1O_HAM0_DET01 - C_AP_I1O_HAM0_DET16	16	na	na	Indicates the offset values for the FPA electronics.	na
E_AP0324 - E_AP0339	21,508-21,523	C_AP_I2E_HAM0_DET01 - C_AP_I2E_HAM0_DET16	16	na	na	Indicates the offset values for the FPA electronics.	na
E_AP0340 - E_AP0355	21,524-21,539	C_AP_I2O_HAM0_DET01 - C_AP_I2O_HAM0_DET16	16	na	na	Indicates the offset values for the FPA electronics.	na
E_AP0356 - E_AP0371	21,540-21,555	C_AP_I3E_HAM0_DET01 - C_AP_I3E_HAM0_DET16	16	na	na	Indicates the offset values for the FPA electronics.	na
E_AP0372 - E_AP0387	21,556-21,571	C_AP_I3O_HAM0_DET01 - C_AP_I3O_HAM0_DET16	16	na	na	Indicates the offset values for the FPA electronics.	na
E_AP0388-E_AP0403	21,572-21,587	C_AP_I4E_HAM0_DET01 - C_AP_I4E_HAM0_DET16	16	na	na	Indicates the offset values for the FPA electronics.	na

Check the JPSS MIS Server at https://jpssmis.gsfc.nasa.gov/frontmenu_dsp.cfm to verify that this is the correct version prior to use.

Table 4.4-15. VIIRS engineering packet descriptions

[1] Ops Use T_ID	[2] DB ID LRV	[3] Engineering Mnemonic (23 Char Max)	[4] # of Bits	[5] Telemetry Range	[6] Anlg SF and Limits	[7] Descriptions/Definitions	[8] CTA Addr(h)
E_AP0404 - E_AP0419	21,588-21,603	C_AP_I4O_HAM0_DET01 - C_AP_I4O_HAM0_DET16	16	na	na	Indicates the offset values for the FPA electronics.	na
E_AP0420 - E_AP0435	21,604-21,619	C_AP_I5E_HAM0_DET01 - C_AP_I5E_HAM0_DET16	16	na	na	Indicates the offset values for the FPA electronics.	na
E_AP0436 - E_AP0451	21,620-21,635	C_AP_I5O_HAM0_DET01 - C_AP_I5O_HAM0_DET16	16	na	na	Indicates the offset values for the FPA electronics.	na
E_AP0452 - E_AP0467	21,636-21,651	C_AP_M1_HAM1_DET01 - C_AP_M1_HAM1_DET16	16	na	na	Indicates the offset values for the FPA electronics.	na
E_AP0468 - E_AP0483	21,652-21,667	C_AP_M2_HAM1_DET01 - C_AP_M2_HAM1_DET16	16	na	na	Indicates the offset values for the FPA electronics.	na
E_AP0484 - E_AP0499	21,668-21,683	C_AP_M3_HAM1_DET01 - C_AP_M3_HAM1_DET16	16	na	na	Indicates the offset values for the FPA electronics.	na
E_AP0500 - E_AP0515	21,684-21,699	C_AP_M4_HAM1_DET01 - C_AP_M4_HAM1_DET16	16	na	na	Indicates the offset values for the FPA electronics.	na
E_AP0516 - E_AP0531	21,700-21,715	C_AP_M5_HAM1_DET01 - C_AP_M5_HAM1_DET16	16	na	na	Indicates the offset values for the FPA electronics.	na
E_AP0532 - E_AP0547	21,716-21,731	C_AP_M6_HAM1_DET01 - C_AP_M6_HAM1_DET16	16	na	na	Indicates the offset values for the FPA electronics.	na
E_AP0548 - E_AP0563	21,732-21,747	C_AP_M7_HAM1_DET01 - C_AP_M7_HAM1_DET16	16	na	na	Indicates the offset values for the FPA electronics.	na
E_AP0564 - E_AP0579	21,748-21,763	C_AP_M8_HAM1_DET01 - C_AP_M8_HAM1_DET16	16	na	na	Indicates the offset values for the FPA electronics.	na
E_AP0580 - E_AP0595	21,764-21,779	C_AP_M9_HAM1_DET01 - C_AP_M9_HAM1_DET16	16	na	na	Indicates the offset values for the FPA electronics.	na
E_AP0596 - E_AP0611	21,780-21,795	C_AP_M10_HAM1_DET01 - C_AP_M10_HAM1_DET16	16	na	na	Indicates the offset values for the FPA electronics.	na
E_AP0612 - E_AP0627	21,796-21,811	C_AP_M11_HAM1_DET01 - C_AP_M11_HAM1_DET16	16	na	na	Indicates the offset values for the FPA electronics.	na
E_AP0628- E_AP0643	21,812-21,827	C_AP_M12_HAM1_DET01 - C_AP_M12_HAM1_DET16	16	na	na	Indicates the offset values for the FPA electronics.	na

Check the JPSS MIS Server at https://jpssmis.gsfc.nasa.gov/frontmenu_dsp.cfm to verify that this is the correct version prior to use.

Table 4.4-15. VIIRS engineering packet descriptions

[1] Ops Use T_ID	[2] DB ID LRV	[3] Engineering Mnemonic (23 Char Max)	[4] # of Bits	[5] Telemetry Range	[6] Anlg SF and Limits	[7] Descriptions/Definitions	[8] CTA Addr(h)
E_AP0644 - E_AP0659	21,828-21,843	C_AP_M13_HAM1_DET01 - C_AP_M13_HAM1_DET16	16	na	na	Indicates the offset values for the FPA electronics.	na
E_AP0660 - E_AP0675	21,844-21,859	C_AP_M14_HAM1_DET01 - C_AP_M14_HAM1_DET16	16	na	na	Indicates the offset values for the FPA electronics.	na
E_AP0676 - E_AP0691	21,860-21,875	C_AP_M15_HAM1_DET01 - C_AP_M15_HAM1_DET16	16	na	na	Indicates the offset values for the FPA electronics.	na
E_AP0692 - E_AP0707	21,876-21,891	C_AP_M16A_HAM1_DET01 - C_AP_M16A_HAM1_DET16	16	na	na	Indicates the offset values for the FPA electronics.	na
E_AP0708 - E_AP0723	21,892-21,907	C_AP_M16B_HAM1_DET01 - C_AP_M16B_HAM1_DET16	16	na	na	Indicates the offset values for the FPA electronics.	na
E_AP0724- E_AP0739	21,908-21,923	C_AP_I1E_HAM1_DET01 - C_AP_I1E_HAM1_DET16	16	na	na	Indicates the offset values for the FPA electronics.	na
E_AP0740- E_AP0755	21,924-21,939	C_AP_I1O_HAM1_DET01 - C_AP_I1O_HAM1_DET16	16	na	na	Indicates the offset values for the FPA electronics.	na
E_AP0756 - E_AP0771	21,940-21,955	C_AP_I2E_HAM1_DET01 - C_AP_I2E_HAM1_DET16	16	na	na	Indicates the offset values for the FPA electronics.	na
E_AP0772 - E_AP0787	21,956-21,971	C_AP_I2O_HAM1_DET01 - C_AP_I2O_HAM1_DET16	16	na	na	Indicates the offset values for the FPA electronics.	na
E_AP0788 - E_AP0803	21,972-21,987	C_AP_I3E_HAM1_DET01 - C_AP_I3E_HAM1_DET16	16	na	na	Indicates the offset values for the FPA electronics.	na
E_AP0804- E_AP0815	21,988 - 21,999	C_AP_I3O_HAM1_DET01 - C_AP_I3O_HAM1_DET12	16	na	na	Indicates the offset values for the FPA electronics.	na
E_AP0816- E_AP0819	42,000-42,003	C_AP_I3O_HAM1_DET13 - C_AP_I3O_HAM1_DET16	16	na	na	Indicates the offset values for the FPA electronics.	na
E_AP0820 - E_AP0835	42,004-42,019	C_AP_I4E_HAM1_DET01 - C_AP_I4E_HAM1_DET16	16	na	na	Indicates the offset values for the FPA electronics.	na
E_AP0836 - E_AP0851	42,020-42,035	C_AP_I4O_HAM1_DET01 - C_AP_I4O_HAM1_DET16	16	na	na	Indicates the offset values for the FPA electronics.	na
E_AP0852 - E_AP0867	42,036-42,051	C_AP_I5E_HAM1_DET01 - C_AP_I5E_HAM1_DET16	16	na	na	Indicates the offset values for the FPA electronics.	na

Check the JPSS MIS Server at https://jpssmis.gsfc.nasa.gov/frontmenu_dsp.cfm to verify that this is the correct version prior to use.

Table 4.4-15. VIIRS engineering packet descriptions

[1] Ops Use T_ID	[2] DB ID LRV	[3] Engineering Mnemonic (23 Char Max)	[4] # of Bits	[5] Telemetry Range	[6] Anlg SF and Limits	[7] Descriptions/Definitions	[8] CTA Addr(h)
E_AP0868 - E_AP0883	42,052-42,067	C_AP_I5O_HAM1_DET01 - C_AP_I5O_HAM1_DET16	16	na	na	Indicates the offset values for the FPA electronics.	na
E_AP0885	42,068	V_AP_LWIR_ADJ_BIAS_1V	14	-6.6 to 6.6 V	NOTE [6]	Digital number of the ASP bias. See Note [11].	3005
E_AP0886	42,069	V_AP_LWIR_ADJ_BIAS_2V	14	-6.6 to 6.6 V	NOTE [6]	Digital number of the ASP bias. See Note [11].	3006
E_AP0895	42,070	V_AP_SMWIR_ADJ_BIAS_1V	14	-6.6 to 6.6 V	NOTE [6]	Digital number of the ASP bias. See Note [11].	3015
E_AP0896	42,071	V_AP_SMWIR_ADJ_BIAS_2V	14	-6.6 to 6.6 V	NOTE [6]	Digital number of the ASP bias. See Note [11].	3016
E_AP0905	42,072	V_AP_VISNIR_ADJ_BIAS_1V	14	-6.6 to 6.6 V	NOTE [6]	Digital number of the ASP bias. See Note [11].	3025
E_AP0999	42,074	EC_AP_DC_FAST_RESTORE	1	na	na	1 = Fast_Low_Resolution Restore Algorithm 0 = Slow_High_Resolution Algorithm	na
BB = BLACKBODY							
E_AP0994	22,009	ETP_BB_AVG_TEMP	14	234 to 331 K	NOTE [6]	Average of the blackbody thermistor temperatures.	na
E_AP0929	2,001	ETP_BB_1	14	234 to 331 K	NOTE [6]	Blackbody thermistor 1.	51F0
E_AP0931	2,003	ETP_BB_3	14	234 to 331 K	NOTE [6]	Blackbody thermistor 3.	51F2
E_AP0932	2,004	ETP_BB_4	14	234 to 331 K	NOTE [6]	Blackbody thermistor 4.	51F3
E_AP0934	2,006	ETP_BB_6	14	234 to 331 K	NOTE [6]	Blackbody thermistor 6.	51F5
E_AP0930	22,002	ETP_BB_2	14	234 to 331 K	NOTE [6]	Black Body Prec Therm 2 (2 and 5 mid pair; used in Radiometry Model.)	51F1
E_AP0933	22,005	ETP_BB_5	14	234 to 331 K	NOTE [6]	Black Body Prec Therm 5 (2 and 5 mid pair; used in Radiometry Model.)	51F4
E_AP0997	22,007	EC_BB_HTR_TEMP_SET	14	234 to 331 K	NOTE [6]	FSW echo, see Cmd C_BB01 description, which is T Kelvin. Temp recovery by LRV scale factor.	na
E_AP0998	22,200	EC_BB_SELECT	16	na	na	Indicates which blackbody thermistors are being used to get the average temperature.	na
CP = CONTROL PROCESSOR							
E_CP0001	820,000	S_CP_SEQ_CNT	32	na	na	This is a running total count of all types of packets sent by VIIRS since power on or a 32-bit rollover. Starts at 1 and increases by 1.	na

Check the JPSS MIS Server at https://jpssmis.gsfc.nasa.gov/frontmenu_dsp.cfm to verify that this is the correct version prior to use.

Table 4.4-15. VIIRS engineering packet descriptions

[1] Ops Use T_ID	[2] DB ID LRV	[3] Engineering Mnemonic (23 Char Max)	[4] # of Bits	[5] Telemetry Range	[6] Anlg SF and Limits	[7] Descriptions/Definitions	[8] CTA Addr(h)
E_CP0002	820,001	S_CP_PKT_TIME_DAY	16	na	na	Time of day measured in days.	na
E_CP0003	820,002	S_CP_PKT_TIME_MILLISEC	32	na	na	Time of day measured in milliseconds.	na
E_CP0004	820,003	S_CP_PKT_TIME_MICROSEC	16	na	na	Time of day measured in microseconds.	na
E_CP0005	820,004	C_CP_FORMAT_VER	8	na	na	Format version allows for format changes between different VIIRS units or software versions.	na
E_CP0006	820,005	C_CP_INSTR_NUM	8	na	na	Indicates which instrument number sent the data. Set to 00000001 for VIIRS EDU, 2 for FU1….	na
E_CP0007	820,006	C_CP_FSW_VERSION	16	na	na	Flight software version allows for software changes between different VIIRS units or software versions. Bits 12-15 are instrument: – 3 for EDU, 4 for FU1…. Bit 11 is Simulator (1) or not (0). Bits 0-10 are FSW version.	na
E_DP0025	23,002	EC_CP_BLK_PWR_SEL	1	na	na	1=XSTRAP, 0=NORMAL; XS1 NORMAL connects PS1_A_PWR to CP_BLK_A (CP, DP, CT and SI) and PS2_A_PWR to CP_BLK_B; XSTRAP connects PS2_A_PWR to CP_BLK_A and PS1_A_PWR to CP_BLK_B; also by SC pt-pt T_SC02	2902
E_CP0044	23,052	ES_CP_WDT_INTERRUPT_STAT	1	0..1	na	Watchdog timer interrupt status. 0= DISABLED, 1= ENABLED	na
E_CP0045	23,053	ES_CP_WDT_RELD_TYPE	1	0..1	na	Watchdog timer interrupt Type 0= COND, 1= UNCOND	na
E_CP0046	23,054	ES_CP_RESET_TYPE_2	2	0..3	na	Reset_Type: 0=POWER_UP, 1=COMMAND_RESET, 2=INVALID, 3=WDT_RESET	na
E_CP0021	23,059	ES_CP_HRDT_VALUE_1	14	na	na	Value_1 of Hi-Rate Dwell Tlmy point	na
E_CP0022	23,061	ES_CP_HRDT_VALUE_2	14	na	na	Value_2 of Hi-Rate Dwell Tlmy point	na
E_CP0023	23,063	ES_CP_HRDT_VALUE_3	14	na	na	Value_3 of Hi-Rate Dwell Tlmy point	na
E_CP0024	23,065	ES_CP_HRDT_VALUE_4	14	na	na	Value_4 of Hi-Rate Dwell Tlmy point	na
E_CP0025	23,067	ES_CP_HRDT_VALUE_5	14	na	na	Value_5 of Hi-Rate Dwell Tlmy point	na
E_CP0026	23,069	ES_CP_HRDT_VALUE_6	14	na	na	Value_6 of Hi-Rate Dwell Tlmy point	na

Check the JPSS MIS Server at https://jpssmis.gsfc.nasa.gov/frontmenu_dsp.cfm to verify that this is the correct version prior to use.

Table 4.4-15. VIIRS engineering packet descriptions

[1] Ops Use T_ID	[2] DB ID LRV	[3] Engineering Mnemonic (23 Char Max)	[4] # of Bits	[5] Telemetry Range	[6] Anlg SF and Limits	[7] Descriptions/Definitions	[8] CTA Addr(h)
E_CP0027	23,071	ES_CP_HRDT_VALUE_7	14	na	na	Value_7 of Hi-Rate Dwell Tlmy point	na
E_CP0028	23,073	ES_CP_HRDT_VALUE_8	14	na	na	Value_8 of Hi-Rate Dwell Tlmy point	na
E_CP0029	23,075	ES_CP_HRDT_VALUE_9	14	na	na	Value_9 of Hi-Rate Dwell Tlmy point	na
E_CP0030	23,077	ES_CP_HRDT_VALUE_10	14	na	na	Value_10 of Hi-Rate Dwell Tlmy point	na
E_CP0031	23,079	ES_CP_HRDT_VALUE_11	14	na	na	Value_11 of Hi-Rate Dwell Tlmy point	na
E_CP0032	23,081	ES_CP_HRDT_VALUE_12	14	na	na	Value_12 of Hi-Rate Dwell Tlmy point	na
E_CP0033	23,083	ES_CP_HRDT_VALUE_13	14	na	na	Value_13 of Hi-Rate Dwell Tlmy point	na
E_CP0034	23,085	ES_CP_HRDT_VALUE_14	14	na	na	Value_14 of Hi-Rate Dwell Tlmy point	na
E_CP0035	23,087	ES_CP_HRDT_VALUE_15	14	na	na	Value_15 of Hi-Rate Dwell Tlmy point	na
E_CP0036	23,089	ES_CP_HRDT_VALUE_16	14	na	na	Value_16 of Hi-Rate Dwell Tlmy point	na
E_CP0090	23,090	S_CP_EVENTS_TABLE	9216	na	na	A complete dump of the latest events table. There are 64 events each 18 bytes. NOTE [10].	na
E_CP0040	23,129	EC_CP_MEM_UNCORR_ERR_CNT	8	0..255	na	System memory (EDAC) uncorrectable error count.	na
E_CP0041	23,130	EC_CP_MEM_CORR_ERR_CNT	8	0..255	na	System memory (EDAC) correctable error count.	na
E_CP0042	23,131	EC_CP_MEM_ALL_ERR_CNT	8	0..255	na	System memory all errors (including correctable, uncorrectable and others) count.	na
E_CP0043	23,132	EC_CP_MEM_OVR_ERR_CNT	8	0..255	na	Number of errors left in the hardware EDAC FIFO buffer and the hardware EDAC FIFO overflow counter.	na
E_CP0047	23,133	EC_CP_PERS_MEM_CNTL	1	na	na	Indicates if EDAC errors, 1394 fault log and event log are being saved to persistent memory. (0= DISABLED, 1= ENABLED)	na
E_CP0048	23,134	EC_CP_CHK_SYS_MEM	1	na	na	Indicates if system memory is being checked for EDAC errors. (0= DISABLED, 1= ENABLED)	na
E_CP0008	23,200	S_CP_END_SCAN_DAY	16	na	na	Time captured when the telescope finishes the Earth collection of the scan cycle. Time measured in days.	na

Table 4.4-15. VIIRS engineering packet descriptions

[1] Ops Use T_ID	[2] DB ID LRV	[3] Engineering Mnemonic (23 Char Max)	[4] # of Bits	[5] Telemetry Range	[6] Anlg SF and Limits	[7] Descriptions/Definitions	[8] CTA Addr(h)
E_CP0009	23,201	S_CP_END_SCAN_MILLISEC	32	na	na	Time captured when the telescope finishes the Earth collection of the scan cycle. Time measured in milliseconds.	na
E_CP0010	23,202	S_CP_END_SCAN_MICROSEC	16	na	na	Time captured when the telescope finishes the Earth collection of the scan cycle. Time measured in microseconds.	na
E_CP0011	23,203	S_CP_SCAN_NUM	32	na	na	Indicates which scan number VIIRS is on. Starts at 1 and increases by 1.	na
E_CP0012	23,204	S_CP_SENSOR_MODE	4	na	na	6 of 9 VIIRS Modes set by 1394A Bus; Codes: 0=Invalid, 1=Activation, 2=OG, 3=Diagnostic, 4=OP_D, 5=OP_N, 6=Safe, 7=Invalid. Mode state chgs after 1st cmd of new mode is issued.	na
E_CP0013	23,205	S_CP_SERVO_LOCKED	1	na	na	Indicates if the servo is not locked or locked. 0=NOT_LOCKED, 1=LOCKED	na
E_CP0014	23,206	S_CP_HAM_SIDE	1	na	na	Indicates which side of the HAM you are using. 0=SIDE_A, 1=SIDE_B	na
E_CP0015	23,207	S_CP_SDSM_ACTIVE	1	na	na	Indicates if the SDSM is not active or active. 0 = INACTIVE, 1 = ACTIVE	na
E_CP0016	23,208	S_CP_FPA_CAL_DATA_GAIN	1	na	na	0=LOW_GAIN, 1=HIGH_GAIN	na
E_CP0017	23,209	S_CP_SELF_TEST_DATA	4	na	na	0=LIVE, 1=TEST_PATTERN_1 The rest are reserved.	na
E_CP0038	23,210	EC_CP_HRDT_MUXADDR	16	na	na	Dwell telemetry.	Any HW point valid.
E_CP0039	23,211	S_CP_CHECKSUM	16	na	na	Checksum of the engineering packet data field. Filled with zeros if not used.	na
CT = CTA = COMMAND and TELEMETRY ASSEMBLY							
E_DP0036	24,001	EV_CT_PREC_TREF_MUX1CA1	14	1.4 to 6.4 V	NOTE [6]	Precision Thermistor Cal Ref Resistor A side = 4.17630 Kohm, B side = 4.420062 Kohm (-20°C Therm 14 equiv)	51FD
E_DP0037	24,002	EV_CT_PREC_TREF_MUX1CA2	14	1.4 to 6.4 V	NOTE [6]	Precision Thermistor Cal Ref Resistor A side = 2.869854 Kohm, B side = 2.869763 Kohm (+20°C P_Therm 15 equiv)	51FE

Check the JPSS MIS Server at https://jpssmis.gsfc.nasa.gov/frontmenu_dsp.cfm to verify that this is the correct version prior to use.

Table 4.4-15. VIIRS engineering packet descriptions

[1] Ops Use T_ID	[2] DB ID LRV	[3] Engineering Mnemonic (23 Char Max)	[4] # of Bits	[5] Telemetry Range	[6] Anlg SF and Limits	[7] Descriptions/Definitions	[8] CTA Addr(h)
E_DP0038	24,003	EV_CT_PREC_TREF_MUX1CA3	14	1.4 to 6.4 V	NOTE [6]	Precision Thermistor Cal Ref Resistor A side = 1.470090 Kohm, B side = 1.470008 Kohm (+50°C P_Therm 16 equiv)	51FF
DP = DPP = DIGITAL PREPROCESSOR							
E_DP0054	19,580	S_DP_TELE_ANG_SCAN_STRT	16	na	na	Contains the telescope raw angle count at start of Earth.	na
E_DP0055	19,581	S_DP_HAM_ANG_SCAN_STRT	16	na	na	Contains the HAM raw angle count at start of Earth.	na
E_DP0010	25,002	EC_DP_NONRDT_FPIE_PWR	1	na	na	0=PS1, 1=PS2; If FPIE Ok connect to active PS. If fault condition, connect to inactive PS	na
E_DP0028	25,004	EC_DP_AP_SELF_TEST	1	na	na	DP_AP Self Test State. 0=DISABLED, 1=ENABLED	na
E_DP0009	25,009	EC_DP_HRD_PKT_NORM_TEST	1	na	na	PKT_Norm_Test state 0= NORMAL, 1= TEST unique value for all FPA channels except DNB. Valid in Oper and Diag modes.	na
E_DP0008	25,010	EC_DP_DN_M_L_GAIN_PKT	1	na	na	Indicates occasional selection to 0=NOT_SEND, 1=SEND DNB Middle Gain Stage (MGS) and Low Gain Stage (LGS) Pkts	na
E_DP0024	25,011	EC_DP_DN_AGGREG_MODE	6	na	na	Earth view DNB Aggregation Mode is to cycle thru 32 modes. Cmd C_DP13 allows forcing it to single test mode. 0=NORMAL, 1 to 36=single test modes, 36-63=Invalid values (Cal View uses 36 modes)	na
E_DP0026	25,012	EC_DP_AP_M16_TDI_ON	1	na	na	Indicates ASP M16 TDI state 1=ON (normal), 0=OFF (M16 is only ASP TDI band)	na
E_DP0011	25,014	EC_DP_SERVO_IN_USE	1	na	na	FSW echo of C_DP04, 0=SERVO_A, 1=SERVO_B	na
E_DP0027	25,015	EC_DP_SCAN_ENCDR_DELTA	16	0 to 32767	na	Scan Encoder Delta shift from normal value D#=0. 16-bits D# = 0 to 32767	na
E_AP0977	25,016	ETP_DP_DNB_CCA	14	-70 to 120 °C	NOTE [6]	DNB CCA Thermistor 60	45EB
E_AP0978	25,017	ETP_DP_DPP_CCA	14	-70 to 120 °C	NOTE [6]	DPP CCA Thermistor 61	45EC
E_AP0980	25,018	ETP_DP_FPIE_CLK_CCA	14	-70 to 120 °C	NOTE [6]	FPIE CLK CCA Thermistor 51 (not on EDU)	45E2
E_AP0979	25,019	ETP_DP_FPIE_AD_CCA	14	-70 to 120 °C	NOTE [6]	FPIE A/D CCA Thermistor 13	42EC

Check the JPSS MIS Server at https://jpssmis.gsfc.nasa.gov/frontmenu_dsp.cfm to verify that this is the correct version prior to use.

Table 4.4-15. VIIRS engineering packet descriptions

[1] Ops Use T_ID	[2] DB ID LRV	[3] Engineering Mnemonic (23 Char Max)	[4] # of Bits	[5] Telemetry Range	[6] Anlg SF and Limits	[7] Descriptions/Definitions	[8] CTA Addr(h)
E_DP0053	25,020	ETA_DP_DNB_CCD	14	217 to 338 K	NOTE [6]	DNB CCD Temperature (thermistor)	1666
E_DP0028	25,028	EC_DP_BND_TRANSMIT_OPD	32	na	na	Indicates bands being put out in the data stream per Figure 63 in Op_Day mode. This telemetry persists from the last band transmit command sent.	
E_DP0029	25,029	EC_DP_BND_TRANSMIT_OPN	32	na	na	Indicates bands being put out in the data stream per Figure 63 in Op_Night mode. This telemetry persists from the last band transmit command sent.	
E_DP0030	25,030	EC_DP_BND_TRANSMIT_DIAG	32	na	na	Indicates bands being put out in the data stream per Figure 63 in Diag mode. This telemetry persists from the last band transmit command sent.	
E_DP0001	25,200	C_DP_REG_TBL_REV	8	na	na	Indicates which table revision you are on for the DPP register table. Start with 0 and increase by 1. Reboot starts at 0.	na
E_DP0002	25,201	C_DP_STATE_TRAN_TBL_REV	8	na	na	Indicates which table revision you are on for the DPP state transition table. Start with 0 and increase by 1. Reboot starts at 0.	na
E_DP0003	25,202	C_DP_BAND_PROC_TBL_REV	8	na	na	Indicates which table revision you are on for the DPP band processing table. Start with 0 and increase by 1. Reboot starts at 0.	na
E_DP0004	25,203	C_DP_HEAT_CTRL_TBL_REV	8	na	na	Indicates which table revision you are on for the PWM heater control table. Start with 0 and increase by 1. Reboot starts at 0.	na
E_DP0005	25,204	C_DP_MACRO_CMD_TBL_REV	8	na	na	Indicates which table revision you are on for the macro command table. Start with 0 and increase by 1. Reboot starts at 0.	na
E_DP0006	25,205	C_DP_CRIT_TELE_TBL_REV	8	na	na	Indicates which table revision you are on for the critical telemetry table. Start with 0 and increase by 1. Reboot starts at 0.	na
E_DP0007	25,206	C_DP_STOR_CMD_TBL_REV	16	na	na	Indicates which table revision you are on for the stored command table. Start with 0 and increase by 1. Reboot starts at 0.	na

Table 4.4-15. VIIRS engineering packet descriptions

[1] Ops Use T_ID	[2] DB ID LRV	[3] Engineering Mnemonic (23 Char Max)	[4] # of Bits	[5] Telemetry Range	[6] Anlg SF and Limits	[7] Descriptions/Definitions	[8] CTA Addr(h)
E_DP0050	25,207	C_DP_AGGREG_MODE_REV	8	na	na	Indicates which mode revision you are on for the DNB aggregation mode. Start with 0 and increase by 1. Reboot starts at 0.	na
E_DP0051	25,208	C_DP_THRESHOLD_TBL_REV	8	na	na	Indicates which table revision you are on for the DNB threshold table. Start with 0 and increase by 1. Reboot starts at 0.	na
E_DP0052	25,209	C_DP_1A_OFFSETS_TBL_REV	8	na	na	Indicates which table revision you are on for the DNB 1A offsets table. Start with 0 and increase by 1. Reboot starts at 0.	na
E_DP0056	25,021	EC_DP_DNB_1A_1B_STAGE	2	na	na	What DNB stage 1 data is sent. 0=AB_STAGE, 1= A_STAGE, 2=B_STAGE	na
E_DP0057	25,022	EC_DP_DNB_TMG_MODE	1	na	na	DNB Timing mode. 0=NORMAL, 1=TEST	na
E_DP0058	25,023	EC_DP_DNB_DARK_SUB_CAL	1	na	na	Dark pixel subtraction for cal views. 0=DISABLED, 1=ENABLED	na
E_DP0059	25,024	EC_DP_DNB_DARK_SUB_ETH	1	na	na	Dark pixel subtraction for Earth views. 0=DISABLED, 1=ENABLED	na
E_DP0060	25,210	C_DP_1B_OFFSETS_TBL_REV	8	na	na	Indicates which table revision you are on for the DNB 1B offsets table. Start with 0 and increase by 1. Reboot starts at 0.	na
E_DP0061	25,211	C_DP_2_OFFSETS_TBL_REV	8	na	na	Indicates which table revision you are on for the DNB 2 offsets table. Start with 0 and increase by 1. Reboot starts at 0.	na
E_DP0062	25,212	C_DP_3_OFFSETS_TBL_REV	8	na	na	Indicates which table revision you are on for the DNB 3 offsets table. Start with 0 and increase by 1. Reboot starts at 0.	na
FT = FTC = FPA TEMPERATURE CONTROLLER							
E_AP0992	27,001	EC_FT_LW_HTR_ON	1	na	na	LWIR Heater 0=OFF, 1=ON	2805
E_AP0993	27,002	EC_FT_SM_HTR_ON	1	na	na	SMIR Heater 0=OFF, 1=ON	2802
E_AP0986	27,003	EC_FT_LW_80K_SETPT	1	na	na	LWIR 80K SetPt 0=OFF, 1=ON, If both 80K and 82K=0, then setpt=78K	2803
E_AP0989	27,004	EC_FT_SM_80K_SETPT	1	na	na	SMIR 80K SetPt 0=OFF, 1=ON, If both 80K and 82K=0, then setpt=78K	2800
E_AP0987	27,005	EC_FT_LW_82K_SETPT	1	na	na	LWIR 82K SetPt 0=OFF, 1=ON, If both 80K and 82K=0, then setpt=78K	2804

Table 4.4-15. VIIRS engineering packet descriptions

[1] Ops Use T_ID	[2] DB ID LRV	[3] Engineering Mnemonic (23 Char Max)	[4] # of Bits	[5] Telemetry Range	[6] Anlg SF and Limits	[7] Descriptions/Definitions	[8] CTA Addr(h)
E_AP0990	27,006	EC_FT_SM_82K_SETPT	1	na	na	SMIR 82K SetPt 0=OFF, 1=ON, If both 80K and 82K=0, then setpt=78K	2801
E_AP0015	27,007	ETA_FT_LW_CFPA_HI_RSL	14	70 to 90 K	NOTE [6]	FT LW CFPA high resolution temperature	30AF
E_AP0016	27,008	ETA_FT_LW_CFPA_LO_RSL	14	50 to 330 K	NOTE [6]	FT LW CFPA wide range temperature	309F
E_AP0017	27,009	ETA_FT_SM_CFPA_HI_RSL	14	70 to 90 K	NOTE [6]	FT SM CFPA high resolution temperature	30CF
E_AP0018	27,010	ETA_FT_SM_CFPA_LO_RSL	14	50 to 330 K	NOTE [6]	FT SM CFPA wide range temperature	30BF
E_AP0019	27,011	ETA_FT_VIS_NIR_FPA	14	233 to 321 K	NOTE [6]	FT VIS/NIR FPA temperature	30DF
E_AP0981	27,012	ETP_FT_CCA	14	-70 to 120 °C	NOTE [6]	FT CCA Thermistor 07	42E6
E_DP0042	27,013	EV_FT_LW_CFPA_HTR_PWR	14	-10.0 to 10.0 V	NOTE [6]	FT LW Heater volts	304F
E_DP0043	27,014	EV_FT_LW_SETPT_REF	14	-5.5 to 5.5 V	NOTE [6]	FT LW SETPT Ref	307F
E_DP0044	27,015	EV_FT_SM_CFPA_HTR_PWR	14	-10.0 to 10.0 V	NOTE [6]	FT SM Heater volts	305F
E_DP0045	27,016	EV_FT_SM_SETPT_REF	14	-5.5 to 5.5 V	NOTE [6]	FT SM SETPT Ref	308F
E_DP0040	27,017	EV_FT_ADC_REF_LW_STPT	14	-2.5 to 2.5V	NOTE [6]	FT ADC Ref LW Setpoint Volt Ref	30FF
E_DP0039	27,018	EV_FT_ADC_REF	14	-2.8 to 2.8 V	NOTE [6]	FT ADC Ref 5V	30EF
E_DP0041	27,019	EV_FT_CKT_GND	14	-2.5 to 2.5V	NOTE [6]	FT Circuit Gnd	306F
HM = HMA = HEATERS and MECHANISMS ASSEMBLY							
E_AP0995	28,013	EC_HM_DNB_HTR_CNTL	1	na	na	FSW echo C_HM06a for DNB Htr. 0=OFF, 1=ON	na
E_AP0988	28,014	EC_HM_HAM_OPHTR_TEMP_SE	14	-26 to 62°C	na	Indicates Htr setpoint as FSW echo of Cmd C_HM09. Temp recovery by LRV scale factor.	na
E_AP0996	28,015	EC_HM_HAM_OP_HTR_CNTL	1	na	na	FSW echo C_HM09 for HAM Htr. 0=OFF, 1=ON	na
E_AP0991	28,016	EC_HM_TEL_OPHTR_TEMP_SET	14	-26 to 62°C	na	Indicates Htr setpoint as FSW echo of Cmd C_HM10. Temp recovery by LRV scale factor.	na
E_AP1000	28,017	EC_HM_TEL_OP_HTR_CNTL	1	na	na	FSW echo C_HM10 for Tele Op Htr. 0=OFF, 1=ON	na
E_AP0937	28,025	ETA_HM_CR_CS_PRT	14	-222 to 104 °C	NOTE [6]	CR Cold Stage PRT Temperature	1664
E_AP0938	28,026	ETA_HM_CR_IS_PRT	14	-222 to 106 °C	NOTE [6]	CR Intermediate Stage PRT Temperature	1665
E_AP0939	28,027	ETA_HM_CR_OS_PRT	14	-241 to 60 °C	NOTE [6]	CR Outer Stage PRT Temperature. Note - OS OG Htr is not used on Orbit. Powered by PS via Sys Test Connector in Gnd Test.	1663

Check the JPSS MIS Server at https://jpssmis.gsfc.nasa.gov/frontmenu_dsp.cfm to verify that this is the correct version prior to use.

Table 4.4-15. VIIRS engineering packet descriptions

[1] Ops Use T_ID	[2] DB ID LRV	[3] Engineering Mnemonic (23 Char Max)	[4] # of Bits	[5] Telemetry Range	[6] Anlg SF and Limits	[7] Descriptions/Definitions	[8] CTA Addr(h)
E_AP0943	28,029	ETP_HM_HAM_DB_OP_HTR_A	14	-70 to 120 °C	NOTE [6]	HAM_DB_BEARING_OP_HTR_A Therm 17	43E0
E_AP0945	28,030	ETP_HM_TELE_DB_OP_HTR_A	14	-70 to 120 °C	NOTE [6]	TELE_DB_BEARING_OP_HTR_A Therm 18	43E1
E_AP0944	28,031	ETP_HM_HAM_DB_OP_HTR_B	14	-70 to 120 °C	NOTE [6]	HAM_DB_BEARING_OP_HTR_B Therm 21	43E4
E_AP0946	28,032	ETP_HM_TELE_DB_OP_HTR_B	14	-70 to 120 °C	NOTE [6]	TELE_DB_BEARING_OP_HTR_B Therm 23	43E6
MF = MAINFRAME							
E_AP0949	29,001	ETP_MF_AO_KM2_NX	14	-70 to 120 °C	NOTE [6]	Aft Optics KM2_NX, Type KM2 has 2 deg of constraint. Therm 38	44E5
E_AP0950	29,002	ETP_MF_AO_KM2_NY	14	-70 to 120 °C	NOTE [6]	Aft Optics KM2_NY, Type KM2 has 2 deg of constraint. Therm 39 (“System” Indicator)	44E6
E_AP0951	29,003	ETP_MF_AO_KM3_PX	14	-70 to 120 °C	NOTE [6]	Aft Optics KM3_PX. Type KM3 has 3 deg of constraint. Therm 40	44E7
E_AP0948	29,004	ETP_MF_AO_BLKHD_PX_NZ	14	-70 to 120 °C	NOTE [6]	MF_AO_BLKHD_PX_NZ Therm 44	44EB
E_AP0947	29,005	ETP_MF_AO_BLKHD_NX_PZ	14	-70 to 120 °C	NOTE [6]	MF_AO_BLKHD_NX_PZ Therm 45	44EC
E_AP0965	29,006	ETP_MF_SPACE_RADIATOR_N	14	-70 to 120 °C	NOTE [6]	MF_SPACE_RADIATOR_NZ Therm 41	44E8
E_AP0966	29,007	ETP_MF_SPACE_RADIATOR_P	14	-70 to 120 °C	NOTE [6]	MF_SPACE_RADIATOR_PZ Therm 42	44E9
E_AP0959	29,008	ETP_MF_NADIR_RADITR_PXN	14	-70 to 120 °C	NOTE [6]	MF_NADIR_RADIATOR_PXNY Therm 5, RT8	42E4
E_AP0958	29,009	ETP_MF_NADIR_RADITR_NXP	14	-70 to 120 °C	NOTE [6]	MF_NADIR_RADIATOR_NXPY Therm 15, RT15	42EE
E_AP0953	29,010	ETP_MF_HAM_BLKHD	14	-70 to 120 °C	NOTE [6]	MF HAM Bulkhead Therm 43	44EA
E_AP0969	29,011	ETP_MF_TEL_BLKHD_PY	14	-70 to 120 °C	NOTE [6]	Mainframe Telescope Bulkhead Therm 33, RT16 (Node 1022 in Radiometry Model)	44E0
E_AP0952	29,012	ETP_MF_FOLD_MIR_BKHD_CT	14	-70 to 120 °C	NOTE [6]	MF_FOLD MIRROR BLKHD Center Therm 6	42E5
E_AP0964	29,013	ETP_MF_SCAN_CVTY_BKHD_N	14	-70 to 120 °C	NOTE [6]	MF_SCAN_CAVITY_BLKHD_NY Therm 8	42E7
E_AP0961	29,014	ETP_MF_SCAN_CAVITY_NX_P	14	-70 to 120 °C	NOTE [6]	MF_SCAN_CAVITY_NX_PZ Therm 46 (Node 1042 in Radiometry Model;cavity indicator)	44ED
E_AP0960	29,015	ETP_MF_SCAN_CAVITY_NX_N	14	-70 to 120 °C	NOTE [6]	MF_SCAN_CAVITY_NX_NZ Therm 47	44EE
E_AP0963	29,016	ETP_MF_SCAN_CVTY_BAF_PZ	14	-40 to 58 °C	NOTE [6]	Temp MF Scan Cavity Baffle PZ Prec Therm 9; (Node 1282 in Radiometry Model)	51F8

Check the JPSS MIS Server at https://jpssmis.gsfc.nasa.gov/frontmenu_dsp.cfm to verify that this is the correct version prior to use.

Table 4.4-15. VIIRS engineering packet descriptions

[1] Ops Use T_ID	[2] DB ID LRV	[3] Engineering Mnemonic (23 Char Max)	[4] # of Bits	[5] Telemetry Range	[6] Anlg SF and Limits	[7] Descriptions/Definitions	[8] CTA Addr(h)
E_AP0962	29,017	ETP_MF_SCAN_CVTY_BAF_NZ	14	-40 to 58 °C	NOTE [6]	Temp MF Scan Cavity Baffle NZ Prec Therm 10; (Node 1272 in Radiometry Model)	51F9
E_AP0955	29,018	ETP_MF_KM2_NXPY	14	-70 to 120 °C	NOTE [6]	Mainframe NXPY Kinematic Mount Therm 34; Type KM2 has 2 deg of constraint.	44E1
E_AP0954	29,019	ETP_MF_KM2_NXNY	14	-70 to 120 °C	NOTE [6]	Mainframe NXNY Kinematic Mount Therm 35; Type KM2 has 2 deg of constraint.	44E2
E_AP0956	29,020	ETP_MF_KM1_PXNY	14	-70 to 120 °C	NOTE [6]	Mainframe PXNY Kinematic Mount Therm 36; Type KM1 has 1 deg of constraint.	44E3
E_AP0957	29,021	ETP_MF_KM2_PXPY	14	-70 to 120 °C	NOTE [6]	Mainframe PXPY Kinematic Mount Therm 37; Type KM2 has 2 deg of constraint.	44E4
E_AP0968	29,023	ETP_MF_TEL_BLKHD_NYPZ	14	-70 to 120 °C	NOTE [6]	On Tel_Blkhd_NYPZ Therm 11	42EA
E_AP0967	29,024	ETP_MF_STOPASSY_BAFF_NZ	14	-70 to 120 °C	NOTE [6]	On Baffle NZ of Apert Stop Assy between HAM and FM2 Therm 14	42ED
PS = POWER SUPPLY SECTION COMMANDS							
E_DP0012	30,002	EC_PS_SEC_B_APFP_ON	1	na	na	PS_SEC_B 0=OFF, 1=ON	na
E_DP0013	30,003	EC_PS_SEC_C_SE_ON	1	na	na	PS_SEC_C 0=OFF, 1=ON	na
E_DP0014	30,004	EC_PS_SEC_D_CSOG_ON	1	na	na	PS_SEC_D 0=OFF, 1=ON	na
E_DP0015	30,005	EC_PS_SEC_E_ISOG_ON	1	na	na	PS_SEC_E 0=OFF, 1=ON	na
E_AP0982	30,006	ETP_PS1	14	-70 to 120 °C	NOTE [6]	Power Supply 1 Thermistor 52	45E3
E_AP0983	30,007	ETP_PS2	14	-70 to 120 °C	NOTE [6]	Power Supply 2 Thermistor 53	45E4
E_SD0002	11,101	V_SD_SDSM_AMP1_SMPL1	14	-2.5 to 2.5 V	NOTE [6]	SDSM sample data.	175F
E_SD0003	11,102	V_SD_SDSM_AMP2_SMPL1	14	-2.5 to 2.5 V	NOTE [6]	SDSM sample data.	176F
E_SD0004	11,103	V_SD_SDSM_AMP3_SMPL1	14	-2.5 to 2.5 V	NOTE [6]	SDSM sample data.	177F
E_SD0005	11,104	V_SD_SDSM_AMP4_SMPL1	14	-2.5 to 2.5 V	NOTE [6]	SDSM sample data.	178F
E_SD0006	11,105	V_SD_SDSM_AMP5_SMPL1	14	-2.5 to 2.5 V	NOTE [6]	SDSM sample data.	179F
E_SD0007	11,106	V_SD_SDSM_AMP6_SMPL1	14	-2.5 to 2.5 V	NOTE [6]	SDSM sample data.	17AF
E_SD0008	11,107	V_SD_SDSM_AMP7_SMPL1	14	-2.5 to 2.5 V	NOTE [6]	SDSM sample data.	17BF
E_SD0009	11,108	V_SD_SDSM_AMP8_SMPL1	14	-2.5 to 2.5 V	NOTE [6]	SDSM sample data.	17CF
E_SD0010	11,109	V_SD_SDSM_AMP1_SMPL2	14	-2.5 to 2.5 V	NOTE [6]	SDSM sample data.	175F
E_SD0011	11,110	V_SD_SDSM_AMP2_SMPL2	14	-2.5 to 2.5 V	NOTE [6]	SDSM sample data.	176F
E_SD0012	11,111	V_SD_SDSM_AMP3_SMPL2	14	-2.5 to 2.5 V	NOTE [6]	SDSM sample data.	177F
E_SD0013	11,112	V_SD_SDSM_AMP4_SMPL2	14	-2.5 to 2.5 V	NOTE [6]	SDSM sample data.	178F

Table 4.4-15. VIIRS engineering packet descriptions

[1] Ops Use T_ID	[2] DB ID LRV	[3] Engineering Mnemonic (23 Char Max)	[4] # of Bits	[5] Telemetry Range	[6] Anlg SF and Limits	[7] Descriptions/Definitions	[8] CTA Addr(h)
E_SD0014	11,113	V_SD_SDSM_AMP5_SMPL2	14	-2.5 to 2.5 V	NOTE [6]	SDSM sample data.	179F
E_SD0015	11,114	V_SD_SDSM_AMP6_SMPL2	14	-2.5 to 2.5 V	NOTE [6]	SDSM sample data.	17AF
E_SD0016	11,115	V_SD_SDSM_AMP7_SMPL2	14	-2.5 to 2.5 V	NOTE [6]	SDSM sample data.	17BF
E_SD0017	11,116	V_SD_SDSM_AMP8_SMPL2	14	-2.5 to 2.5 V	NOTE [6]	SDSM sample data.	17CF
E_SD0018	11,117	V_SD_SDSM_AMP1_SMPL3	14	-2.5 to 2.5 V	NOTE [6]	SDSM sample data.	175F
E_SD0019	11,118	V_SD_SDSM_AMP2_SMPL3	14	-2.5 to 2.5 V	NOTE [6]	SDSM sample data.	176F
E_SD0020	11,119	V_SD_SDSM_AMP3_SMPL3	14	-2.5 to 2.5 V	NOTE [6]	SDSM sample data.	177F
E_SD0021	11,120	V_SD_SDSM_AMP4_SMPL3	14	-2.5 to 2.5 V	NOTE [6]	SDSM sample data.	178F
E_SD0022	11,121	V_SD_SDSM_AMP5_SMPL3	14	-2.5 to 2.5 V	NOTE [6]	SDSM sample data.	179F
E_SD0023	11,122	V_SD_SDSM_AMP6_SMPL3	14	-2.5 to 2.5 V	NOTE [6]	SDSM sample data.	17AF
E_SD0024	11,123	V_SD_SDSM_AMP7_SMPL3	14	-2.5 to 2.5 V	NOTE [6]	SDSM sample data.	17BF
E_SD0025	11,124	V_SD_SDSM_AMP8_SMPL3	14	-2.5 to 2.5 V	NOTE [6]	SDSM sample data.	17CF
E_SD0026	11,125	V_SD_SDSM_AMP1_SMPL4	14	-2.5 to 2.5 V	NOTE [6]	SDSM sample data.	175F
E_SD0027	11,126	V_SD_SDSM_AMP2_SMPL4	14	-2.5 to 2.5 V	NOTE [6]	SDSM sample data.	176F
E_SD0028	11,127	V_SD_SDSM_AMP3_SMPL4	14	-2.5 to 2.5 V	NOTE [6]	SDSM sample data.	177F
E_SD0029	11,128	V_SD_SDSM_AMP4_SMPL4	14	-2.5 to 2.5 V	NOTE [6]	SDSM sample data.	178F
E_SD0030	11,129	V_SD_SDSM_AMP5_SMPL4	14	-2.5 to 2.5 V	NOTE [6]	SDSM sample data.	179F
E_SD0031	11,130	V_SD_SDSM_AMP6_SMPL4	14	-2.5 to 2.5 V	NOTE [6]	SDSM sample data.	17AF
E_SD0032	11,131	V_SD_SDSM_AMP7_SMPL4	14	-2.5 to 2.5 V	NOTE [6]	SDSM sample data.	17BF
E_SD0033	11,132	V_SD_SDSM_AMP8_SMPL4	14	-2.5 to 2.5 V	NOTE [6]	SDSM sample data.	17CF
E_SD0034	11,133	V_SD_SDSM_AMP1_SMPL5	14	-2.5 to 2.5 V	NOTE [6]	SDSM sample data.	175F
E_SD0035	11,134	V_SD_SDSM_AMP2_SMPL5	14	-2.5 to 2.5 V	NOTE [6]	SDSM sample data.	176F
E_SD0036	11,135	V_SD_SDSM_AMP3_SMPL5	14	-2.5 to 2.5 V	NOTE [6]	SDSM sample data.	177F
E_SD0037	11,136	V_SD_SDSM_AMP4_SMPL5	14	-2.5 to 2.5 V	NOTE [6]	SDSM sample data.	178F
E_SD0038	11,137	V_SD_SDSM_AMP5_SMPL5	14	-2.5 to 2.5 V	NOTE [6]	SDSM sample data.	179F
E_SD0039	11,138	V_SD_SDSM_AMP6_SMPL5	14	-2.5 to 2.5 V	NOTE [6]	SDSM sample data.	17AF
E_SD0040	11,139	V_SD_SDSM_AMP7_SMPL5	14	-2.5 to 2.5 V	NOTE [6]	SDSM sample data.	17BF
E_SD0041	11,140	V_SD_SDSM_AMP8_SMPL5	14	-2.5 to 2.5 V	NOTE [6]	SDSM sample data.	17CF
E_SD0044	31,001	EC_SD_PREAMP_ODD_PWR	1	na	na	SDSM Preamp 1,3,5,7 Pwr: 0=PS1, 1=PS2	2904
E_SD0043	31,002	EC_SD_PREAMP_EVEN_PWR	1	na	na	SDSM Preamp 2,4,6,8 Pwr: 0=PS1, 1=PS2	290C
E_SD0045	31,003	EC_SD_SDSM_MTR_AT_HOME	1	na	na	SDSM Motor Home: 0=NOT HOME, 1=HOME When SDSM performs calibration cycle, this telemetry will be one scan delayed compared to the housekeeping packet motor	2000

Check the JPSS MIS Server at https://jpssmis.gsfc.nasa.gov/frontmenu_dsp.cfm to verify that this is the correct version prior to use.

Table 4.4-15. VIIRS engineering packet descriptions

[1] Ops Use T_ID	[2] DB ID LRV	[3] Engineering Mnemonic (23 Char Max)	[4] # of Bits	[5] Telemetry Range	[6] Anlg SF and Limits	[7] Descriptions/Definitions	[8] CTA Addr(h)
						home telemetry (LRV 11,003). SDSM detector output in LRVs 11,101-11,140 is synchronized only with the engineering packet SDSM position telemetry (LRVs 31,003 and 31,004).	
E_CP0020	31,004	ES_SD_SDSM_MTR_STEP_CNT	7	0 - 95	na	SDSM Motor Absolute Step Count. Cmds C_SD06 and C_SD07 move motor CW/CCW by relative steps. SW tracks absolute step count as Step 0=DCR (tlmy home), Step 28=SDiffuser, and Step 67=Sun. SW rolls step 96 as return to DCR=Step 0, 360º rotation Ok, 3.75º/step. Steps take 12 millisec/ea, except last step is 60 millisec. Before Home initialization, Step=127 default but step relation is unknown. When SDSM performs calibration cycle, this telemetry will be one scan delayed compared to the housekeeping packet step count telemetry (LRV 11,004). SDSM detector output in LRVs 11,101-11,140 is synchronized only with the engineering packet SDSM position telemetry (LRVs 31,003 and 31,004).	na
E_SD0042	31,006	ETP_SD_SDSM_PREAMP	14	-70 to 120 °C	NOTE [6]	SDSM Preamp Thermistor 57	45E8
E_SD0001	31,200	S_SD_POSITION	8	na	na	SDSM position.	na
E_SD0056	31,005	EC_SD_SDSM_MTR_HOLD	1	na	na	Indicates SDSM motor hold is ON or OFF. State 0=OFF, 1=ON	na
SE = SCE = SERVO CONTROL ELECTRONICS							
E_SE0001 - E_SE1290	17,000 - 18,289	S_SE_TELE_TIMESTMP_0000 - S_SE_TELE_TIMESTMP_1289	16	na	na	Pulse arrival times from scan start. LSB = 0.4957 µsec. Unsigned.	na
E_SE1291 - E_SE2580	18,290 - 19,579	S_SE_HAM_TIMESTMP_0000 - S_SE_HAM_TIMESTMP_1289	16	na	na	Pulse arrival times from scan start. LSB = 0.4957 µsec. Unsigned.	na
E_DP0029	32,002	EC_SE_SERVO_PWR_SEL	1	na	na	1=XSTRAP, 0=NORMAL. XS2 NORMAL connects PS1_A_PWR and PS1_C_PWR to Servo_A; and PS2_A_PWR and PS2_C_PWR to Servo_B. XS2 XSTRAP connects PS2_A_PWR and PS1_C_PWR to Servo_A; and PS1_A_PWR and	2903

Check the JPSS MIS Server at https://jpssmis.gsfc.nasa.gov/frontmenu_dsp.cfm to verify that this is the correct version prior to use.

Table 4.4-15. VIIRS engineering packet descriptions

[1] Ops Use T_ID	[2] DB ID LRV	[3] Engineering Mnemonic (23 Char Max)	[4] # of Bits	[5] Telemetry Range	[6] Anlg SF and Limits	[7] Descriptions/Definitions	[8] CTA Addr(h)
						PS1_C_PWR to Servo_B; also by SC pt-pt.	
E_DP0017	32,003	EC_SE_A_MTR_COIL_DRIVER	1	na	na	FSW echoes 2 cmds to indicate driver source for SE_A Mtr Coil (card driver or external SC Pwr). 0=SC_SAFEHOLD by Cmd C_SE10. 1=SE_A_CCA via Cmd C_SE_02. Tlmy is invalid unless one state has been commanded since power up since SW status is lost by resets.	na
E_DP0021	32,004	EC_SE_B_MTR_COIL_DRIVER	1	na	na	FSW echoes 2 cmds to indicate driver source for SE_B Mtr Coil (card driver or external SC Pwr). 0=SC_SAFEHOLD by Cmd C_SE10. 1=SE_B_CCA via Cmd C_SE_04. Tlmy is invalid unless one state has been commanded since power up since SW status is lost by resets.	na
E_DP0016	32,005	EC_SE_A_ANLG_PWR_ON	1	na	na	Analog Pwr present on SE_A, 0=NO_PWR, 1=PWR	290A
E_DP0020	32,006	EC_SE_B_ANLG_PWR_ON	1	na	na	Analog Pwr present on SE_B, 0=NO_PWR, 1=PWR	290B
E_DP0018	32,007	EC_SE_A_MTRS_STOPPED	1	na	na	SE_A Motor state 0=NOT_STOPPED, 1=STOPPED	280B
E_DP0022	32,008	EC_SE_B_MTRS_STOPPED	1	na	na	SE_B Motor state 0=NOT_STOPPED, 1=STOPPED	2908
E_DP0019	32,009	EC_SE_A_TELE_POS_KNOWN	1	na	na	Telescope position_A, Known covers Static Case (Stowed) and Dynamic Case (Servo up to speed and controlled), 0=UNKNOWN, 1=KNOWN	280C
E_DP0023	32,010	EC_SE_B_TELE_POS_KNOWN	1	na	na	Telescope position_B, Known covers Static Case (Stowed) and Dynamic Case (Servo up to speed and controlled), 0=UNKNOWN, 1=KNOWN	2909
E_CP0018	32,011	ES_SE_A_TELEHAM_SCANSYN	1	na	na	SE_A TELE and HAM ready for good scan data with proper relative angle between them 0=NO_SYNC, 1=SYNC	2809

Check the JPSS MIS Server at https://jpssmis.gsfc.nasa.gov/frontmenu_dsp.cfm to verify that this is the correct version prior to use.

Table 4.4-15. VIIRS engineering packet descriptions

[1] Ops Use T_ID	[2] DB ID LRV	[3] Engineering Mnemonic (23 Char Max)	[4] # of Bits	[5] Telemetry Range	[6] Anlg SF and Limits	[7] Descriptions/Definitions	[8] CTA Addr(h)
E_CP0019	32,012	ES_SE_B_TELEHAM_SCANSYN	1	na	na	SE_B TELE and HAM ready for good scan data with proper relative angle between them 0=NO_SYNC, 1=SYNC	2906
E_DP0030	32,013	ES_SE_A_HAM_MIR_SIDE	1	na	na	SE_A Mirror Side 0=SIDE_A, 1=SIDE_B	280A
E_DP0031	32,014	ES_SE_B_HAM_MIR_SIDE	1	na	na	SE_B Mirror Side 0=SIDE_A, 1=SIDE_B	2907
E_AP0984	32,015	ETP_SE_A_CCA	14	-70 to 120 °C	NOTE [6]	SCE_A CCA Thermistor 31	43EE
E_AP0985	32,016	ETP_SE_B_CCA	14	-70 to 120 °C	NOTE [6]	SCE_B CCA Thermistor 12	42EB
E_AP0971	32,017	ETP_SE_A_TELEMTR_DFBEAR	14	-70 to 120 °C	NOTE [6]	TELE DF Bearing Temp MTR_A Therm28, temp=nominal -5°C when Op_Htr is on.	43EB
E_AP0973	32,018	ETP_SE_B_TELEMTR_DFBEAR	14	-70 to 120 °C	NOTE [6]	TELE DF Bearing Temp MTR_B Therm09, temp=nominal -5°C when Op_Htr is on.	42E8
E_AP0970	32,019	ETP_SE_A_HAMMTR_DFBEAR	14	-70 to 120 °C	NOTE [6]	HAM DF Bearing Temp MTR_A Therm 29, temp=nominal -5°C when Op_Htr is on.	43EC
E_AP0972	32,020	ETP_SE_B_HAMMTR_DFBEAR	14	-70 to 120 °C	NOTE [6]	HAM DF Bearing Temp MTR_B Therm 10, temp=nominal -5°C when Op_Htr is on.	42E9
E_AP0935	32,021	ETP_SE_HAM_MIRR_T1	14	-31 to 63 °C	NOTE [6]	Half Angle Mirror T1 Prec Therm 07, radiatively coupled	51F6
E_AP0936	32,022	ETP_SE_HAM_MIRR_T2	14	-31 to 63 °C	NOTE [6]	Half Angle Mirror T2 Prec Therm 08, radiatively coupled	51F7
E_DP0033	32,023	EI_SE_A_TELE_MTR_CURR	14	-2.5 to 2.5 V	NOTE [6]	SE_A Telescope Motor Current	160F
E_DP0035	32,024	EI_SE_B_TELE_MTR_CURR	14	-2.5 to 2.5 V	NOTE [6]	SE_B Telescope Motor Current	16EF
E_DP0032	32,025	EI_SE_A_HAM_MTR_CURR	14	-2.5 to 2.5 V	NOTE [6]	SE_A Half Angle Mirror Motor Current	161F
E_DP0034	32,026	EI_SE_B_HAM_MTR_CURR	14	-2.5 to 2.5 V	NOTE [6]	SE_B Half Angle Mirror Motor Current	170F
E_DP0047	32,027	EV_SE_A_TELE_RATE_ERROR	14	-2.5 to 2.5 V	NOTE [6]	SE_A Telescope Rate Error	163F
E_DP0049	32,028	EV_SE_B_TELE_RATE_ERROR	14	-2.5 to 2.5 V	NOTE [6]	SE_B Telescope Rate Error	172F
E_DP0046	32,029	EV_SE_A_HAM_RATE_ERROR	14	-2.5 to 2.5 V	NOTE [6]	SE_A Half Angle Mirror Rate Error	164F
E_DP0048	32,030	EV_SE_B_HAM_RATE_ERROR	14	-2.5 to 2.5 V	NOTE [6]	SE_B Half Angle Mirror Rate Error	173F

Notes

[1] Ops Use T_ID, with form T_SSXX, is a unique telemetry identifier for tracking purposes. VIIRS uses 2-alpha characters to identify its subsystems (SS) as defined at the front of the Common Acronym table in RTN/VIIRS document EDD154640-104. XX is a numeric in that SS. The 2-alphas are used in IDs, Mnemonics and text.

[2] DB ID LRV (decimal) is a unique ID similar to T_ID for use in the STE DB. Subsystem Block Numbers have been defined in RTN/VIIRS document EDD154640-104 to relate subsystem IDs in the DB to the Ops Use IDs for both commands and telemetry. There are not as many command subsystems as telemetry subsystems, so a few Block Numbers are not used in the earlier command list. If new telemetry is developed, the Ops Use T_IDs may append an alpha suffix to sequence Ops Use IDs in a logical manner to existing items. But the DB ID will just use the next open LRV number.

Check the JPSS MIS Server at https://jpssmis.gsfc.nasa.gov/frontmenu_dsp.cfm to verify that this is the correct version prior to use.

[3] Telemetry Mnemonic is telemetry name. It begins with a 1 or 2 alpha prefix for functional use, which are: C =Configuration, I =Current, S =Status, TA or TP =Temperature (TA is active and TP is passive), V =Voltage. Configuration and Status are similar in that either provides a state condition. They differ in that 'C' configuration state is certain, whereas 'S' status state may change or depend on other signals.

[4] Indicates the number of bits assigned to the particular word. All multibit data is sequenced with the MSB as the first bit sent. Analog items are either 8 or 16 bits, however the two MSB's of 16 bit items are ADC status bits so there are only 14 value bits (entry indicates 16,na 2MSB). The 2-bit status is ignored except for the 18 S_CP_HRDT_VALUE_X items. When the status bits are recovered the 2 bit codes are: 00=good Tlmy data, 01=analog error, 10=unrecognized Tlmy request and 11 skipped requests (bits 13:0 will be 0).

[5] The Approximate Analog Range for telemetry may be skewed or otherwise compressed for the given bit assignment due to analog signals not always being centered or scaled completely over the ±2.5V input range of the ADC.

[6] Scale Factor Equations for Analog Telemetry and Engineering Data and Analog Telemetry Alarm Limits are defined in RTN/VIIRS document EDD154640-104. All analog telemetry signals are not assigned limits.

[7] Provides additional information to the Mnemonic, and logic definitions of bilevel and simple multidigit telemetry.

[8] Indicates the CTA Hex Address if the telemetry is derived by HW (SW items do not have a CTA address).

[9] The telemetry mnemonics in the engineering packet that begin with an "E" are duplicates of the telemetry mnemonics found in the housekeeping packet. The equivalent engineering mnemonics LRV is the housekeeping mnemonic LRV + 20,000. Even though the mnemonics might be duplicates, they aren't always the same bit length.

Table 4.4-15. VIIRS engineering packet descriptions notes (continued)

[10] The event dump data S_CP_EVENTS_TABLE (LRV 23,090) consists of 64 event ID structures, each 18 bytes. See diagram below.

Event Id Structure

Event Id	Timestamp: Day	Timestamp: mSec	Timestamp: uSec	Data 1	Data 2
2 Bytes	2 Bytes	4 Bytes	2 Bytes	4 Bytes	4 Bytes

[11] The same hardware values are loaded into two sets of LRVs:

21,014	42,068
21,013	42,069
21,019	42,070
21,018	42,071
21,024	42,072

4.4.4.3 Diagnostic Data

Diagnostic mode data differs from Operational mode data in the following major ways

- The APIDs associated with the bands in Diagnostic mode are 830 to 853, different from those in Operational mode.
- No aggregation is performed on the imaging and single gain band data. To highlight this fact, the contents of the Diagnostic mode science packets are called Samples (As opposed to Pixels in Operational Mode)
- Band subtraction, compression, and bow tie deletion are not performed.
- All 22 bands are packetized at all times - there is no distinction between day and night.
- The scan width is limited to 26.38 degrees from the start of the earth view window and is not centered about Nadir.
- There is only one "aggregation sector" per packet. This sector contains all the data collected in the 26.38 degree scan by one detector.

Figure 4.4-27 summarizes the processing of data in Diagnostic Mode. Table 4.4-16 shows the processing functions implemented inside the "Arithmetic Processing" box in Figure 4.4-27. Note relation of the A, B & C points.

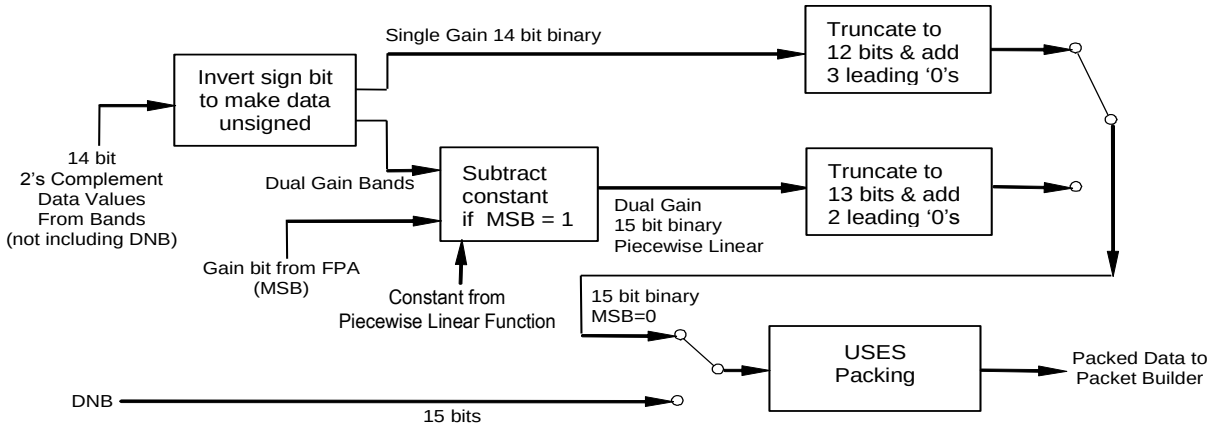

Figure 4.4-27. VIIRS Overview of Science Data Processing in Diagnostic Mode

Table 4.4-16. VIIRS Arithmetic Processing Summary

Band(s)	A (14 bits)	B (14 bits)	C (15 bits)
M16	M16 #1	M16 #2	C = (A + B) / 2 + (MSB=zero)
Dual gain (No Pred)	2^{13}	Data + 2^{13}	C = B – A + (MSB= zero)
Single gain (No Pred)	2^{13} (14 bits)	Data + 2^{13}	C = B – A (MSB= zero)

Although no aggregation is performed in Diagnostic Mode, samples corresponding to one scan from one detector are treated as one "aggregation zone" for the purposes of packetization. Because bow tie deletion is not performed the number of samples from each detector in a band is

Check the JPSS MIS Server at https://jpssmis.gsfc.nasa.gov/frontmenu_dsp.cfm to verify that this is the correct version prior to use.

the same. The number of samples per scan in Diagnostic Mode is less than in Operational Mode because the scan is limited to a width of 26.38 degrees from the start of the earth view window. The overall process of data collection in Diagnostic Mode is shown in Figure 4.4-28 below.

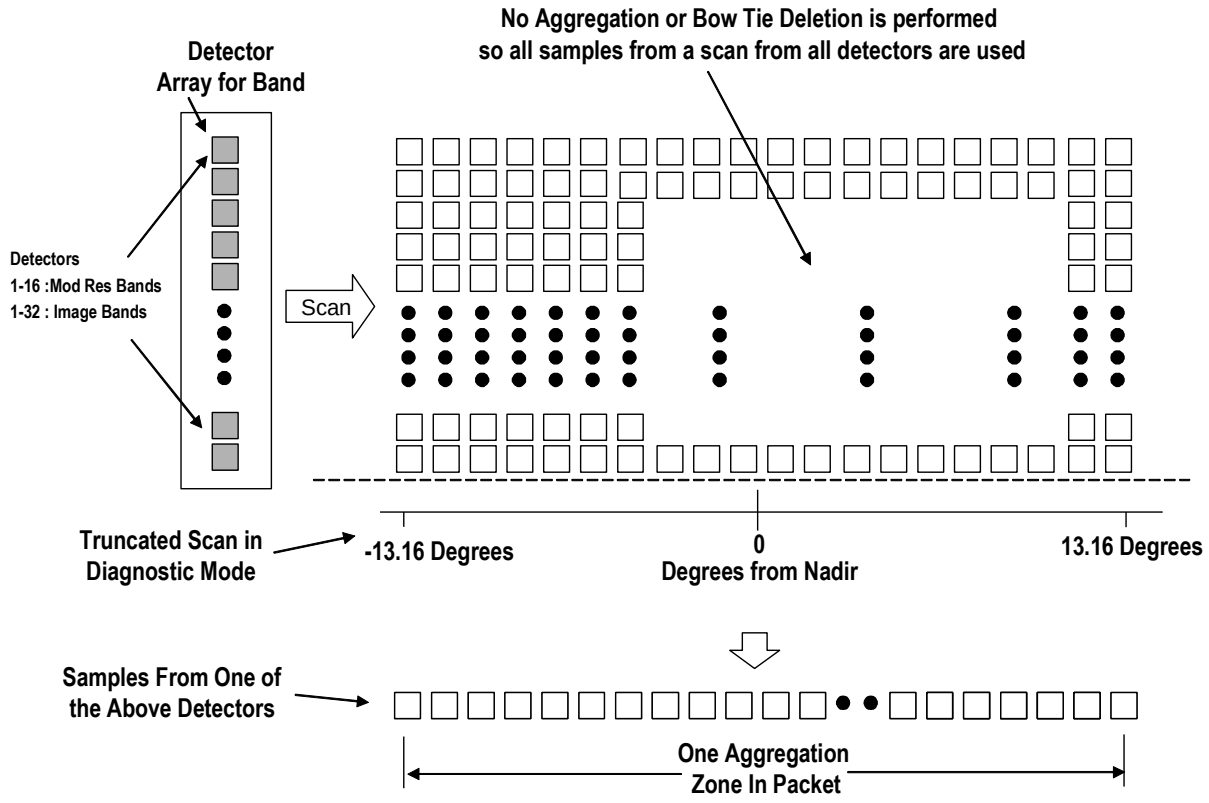

Figure 4.4-28. VIIRS Overview Of Data Handling In Diagnostic Mode

Table 4.4-17 shows the number of samples in the "aggregation zone" by band type. All samples are 15 bits and are packed prior to be inserted into the packet.

Table 4.4-17. VIIRS Summary of Maximum Number of Samples in Aggregation Zone by Band Type

Detectors	Number of Samples in "Aggregation Zone" *	Total Samples
0 through 15	Moderate Resolution Bands (16 Bands) 2048	2048
0 through 31	Imaging Bands (5 Bands) 4096	4096
0 through 15	DNB (1 Band) 2048	2048

* The use of the term "aggregation zone" is for consistency with previous section and with the nomenclature used to describe packet fields. No aggregation is actually performed. Number of samples is configurable with a Table ID 7 upload.

4.4.4.3.1 Diagnostic Mode Arithmetic Processing

The arithmetic processing shown in Figure 4.4-27 is simpler than in Operational Mode because no band differencing or prediction is performed. This is reflected in the left hand side of Figure 4.4-27 by the addition of a constant 213, as opposed to the differencing operation shown earlier in Figure 4.4-6. The details of the processing in Diagnostic Mode are otherwise the same as described earlier in Operational Mode Arithmetic Operations and are not be repeated here.

4.4.4.3.2 Diagnostic Mode Packet Processing

As in Operational Mode, there is one grouped CCSDS science packet per band. Each science data grouped packet consists of a First CCSDS Packet, N-1 Middle CCSDS Packets, and a Last CCSDS Packet, where N is the number of detectors associated with the band. The Middle and Last science data CCSDS packets consist of a Packet Primary Header followed by a User Data Field. Unlike Operational Mode, in Diagnostic Mode the User Data Field contains only 1 subfield of data. This subfield contains the uncompressed samples from a detector resulting from the reduced scan. Although this data subfield is denoted as "Aggr N" on the packet diagrams, N is always equal to 1.

To build the subfield the instrument packs the 15 bit samples. As in Operational Mode, 1 to 31 bits having value 0 are appended to the resulting data to make the total length of the "Aggr 1" subfield a multiple of 32 bits. The number of bits appended is stored in the "Number of Fill Bits" subfield in the science data middle and last CCSDS packets. To correctly unpack and interpret the data in the subfield, the appended bits must first be removed.

Figure 4.4-29 shows the processing of the science data packets in Diagnostic Mode.

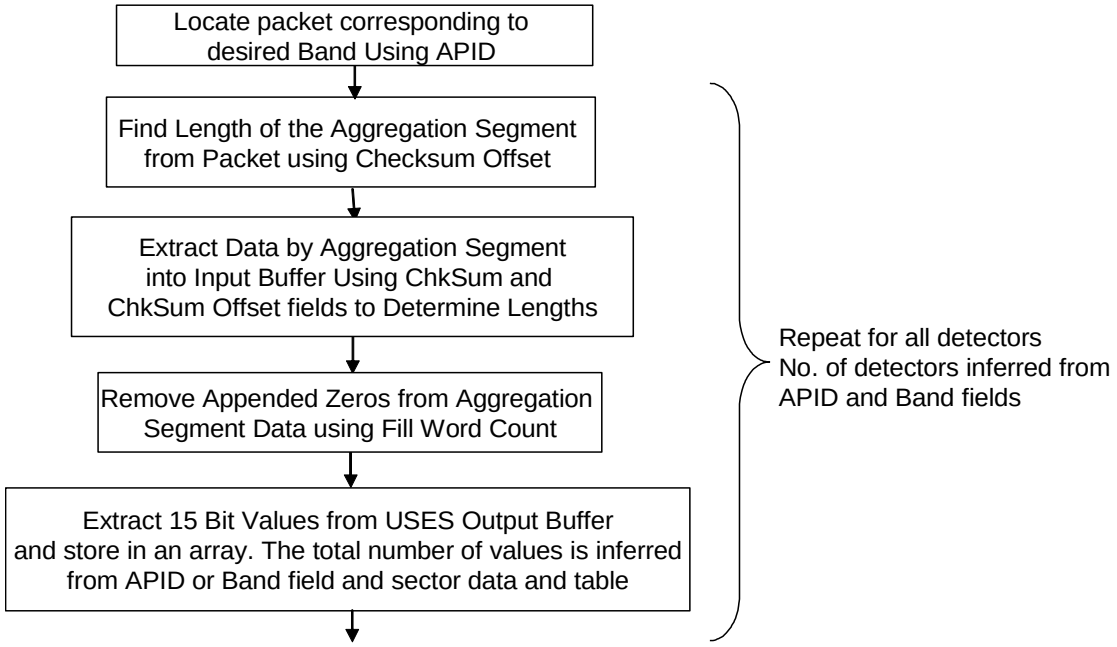

Figure 4.4-29. VIIRS Science Data Packet Processing Overview – Diagnostic Mode

4.4.4.3.3 Diagnostic Mode Day/Night Band Processing

The format of the DNB HRD packet when the instrument is in diagnostic mode is also very similar to the other bands. There is only one "aggregation zone" and the data is not compressed. In Diagnostic mode, the length of a scan is shortened to ensure that the instrument data rate is within specification. As a result, the number of samples in a scan of the DNB is 1376, as previously shown in Table 4.4-17. The format of the DNB data is shown schematically in Figure 4.4 30. When in diagnostic mode, the DNB only operates in Aggregation Mode 32. This does not affect the process for extracting data from a packet however.

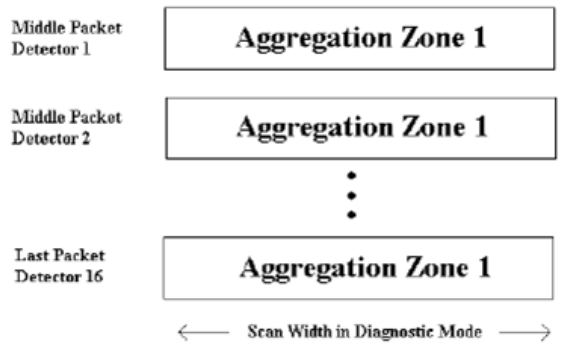

Figure 4.4-30. VIIRS Format Of DNB Data When In Diagnostic Mode

Table 4.4-18. VIIRS DNB Reference Information

Sector in CCSDS Packet	Aggre-gation Mode	Scan Angle relative to Nadir (degrees)	Samples per Detector per scan
1	32	-55.4	80
1	31	-55.3	16
1	30	-54.7	64
1	29	-54.0	64
1	28	-53.3	64
1	27	-53.0	32
1	26	-52.7	24
1	25	-51.8	72
1	24	-51.3	40
1	23	-50.5	56
1	22	-49.9	40
1	21	-49.1	48
1	20	-48.6	32
1	19	-47.8	48
1	18	-47.2	32
1	17	-45.9	72

Sector in CCSDS Packet	Aggre-gation Mode	Scan Angle relative to Nadir (degrees)	Pixels per Detector per scan
4	1	0.0	184
4	2	9.4	72
4	3	13.0	88
4	4	17.2	72
4	5	20.5	80
4	6	23.9	72
4	7	26.8	64
4	8	29.2	64
4	9	31.5	64
Total Samples in Sector 4			**760**
5	10	33.6	64
5	11	35.6	64
5	12	37.4	80
5	13	39.6	56
5	14	41.0	80
5	15	42.9	72

Sector in CCSDS Packet	Aggre-gation Mode	Scan Angle relative to Nadir (degrees)	Samples per Detector per scan
Total Samples in Sector 1			**784**
2	16	-44.5	72
2	15	-42.9	72
2	14	-41.0	80
2	13	-39.6	56
2	12	-37.4	80
2	11	-35.6	64
2	10	-33.6	64
Total Samples in Sector 2			**488**
3	9	-31.5	64
3	8	-29.2	64
3	7	-26.8	64
3	6	-23.9	72
3	5	-20.5	80
3	4	-17.2	72
3	3	-13.0	88
3	2	-9.4	72
3	1	0.0	184
Total Samples in Sector 3			**760**

Sector in CCSDS Packet	Aggre-gation Mode	Scan Angle relative to Nadir (degrees)	Pixels per Detector per scan
5	16	44.5	72
Total Samples in Sector 5			**488**
6	17	45.9	72
6	18	47.2	32
6	19	47.8	48
6	20	48.6	32
6	21	49.1	48
6	22	49.9	40
6	23	50.5	56
6	24	51.3	40
6	25	51.8	72
6	26	52.7	24
6	27	53.0	32
6	28	53.3	64
6	29	54.0	64
6	30	54.7	64
6	31	55.3	16
6	32	55.4	80
Total Samples in Sector 6			**784**

Figure 4.4-31 shows, at a top level, the processing for DNB data when the instrument is in Diagnostic Mode. Note that although the above discussion treats the number of samples per scan in Diagnostic Mode as a constant, the number of samples is stored in the packet. Thus, if a command changes the scan length, the correct number of samples can be determined from this variable.

Check the JPSS MIS Server at https://jpssmis.gsfc.nasa.gov/frontmenu_dsp.cfm to verify that this is the correct version prior to use.

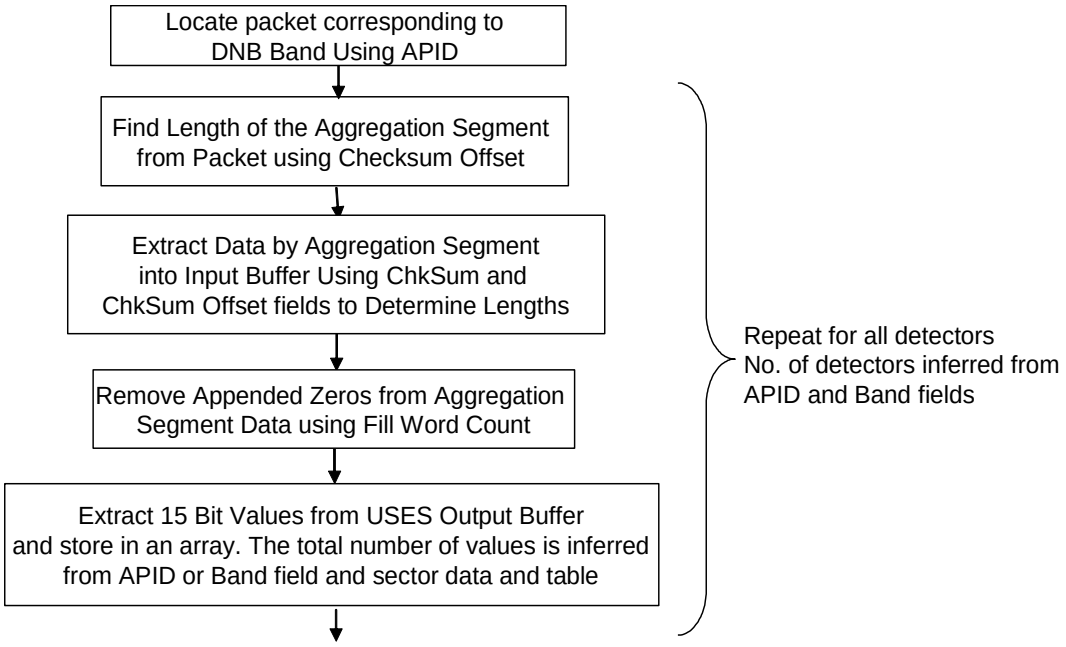

Figure 4.4-31. VIIRS DNB Processing Flow – Diagnostic Mode

Because the Diagnostic Data is uncompressed, the grouped packets have fixed lengths. The structure for APIDs 830 to 853 is shown in Figure 4.4-32 to Figure 4.4-34. Like the Operational Science data, the grouped packets are output once per VIIRS scan (1.7864 sec). The User Data Fields listed in Table 4.4-19 and Table 4.4-20 show the fixed length and positions of the fields.

Check the JPSS MIS Server at https://jpssmis.gsfc.nasa.gov/frontmenu_dsp.cfm to verify that this is the correct version prior to use.

First Packet

Fixed Packet Length 180 Octets

	PACKET PRIMARY HEADER							SECONDARY HEADER			User Data Field							
	Verson No.	Packet Identification			Packet Sequence Control (PSC)		Packet Length	Start of Scan	Number of Packet Segments	Spare	VIIRS Packet ID		HR Format			HR Science Data		
		Type Indicator	Sec Hdr Flag	APID	Sequence Flags	Sequence Count					VIIRS Sequence Count	Packet Time	Format Version	Instrument Number	Spare	HR Meta Data	Checksum	TOTAL
Bits	3	1	1	11	2	14	16	64	8	8	32	64	8	8	16	1168	16	1440
Octets	2				2		2	8	1	1	4	8	1	1	2	146	2	180
Value	000	0	1	varies	01	varies	0x00AD	varies	varies	00_{16}	varies	varies	2	2	zeros	varies	varies	

0 = Telemetry Packet

1 = Secondary Header Present

Segmented data, First packet.

CCSDS Day Segmented

This is a running total count of all types of packets sent by VIIRS since power on or 32-bit rollover.

CCSDS Day Segmented Time packet was created (for SBRS)

16-bit arithmetic Checksum of HR Meta Data Field. Filled with zeros if not used.

	HR Meta Data														
	HAM Side	Scan Synch	Self Test Data Pattern	Reserved	Scan Number	Scan Terminus	Sensor Mode	VIIRS Model	FSW Version	Band Data Word	First Sample Count	No. of Samples	Sample Delay	Reserved	TOTAL
Bits	1	1	4	10	32	64	8	8	16	32	16	16	16	944	1168
Octets	2				4	8	1	1	2	4	2	2	2	118	146
Value	varies	varies	varies	varies	varies	varies	varies	varies	varies	varies	varies	varies	varies	varies	

0000 Live Data
0001-1111 Test Data Patterns

Filled with zeros if unused

CCSDS Day Segmented

Filled with zeros if unused

Figure 4.4-32. VIIRS Diagnostic First Packet Format

Check the JPSS MIS Server at https://jpssmis.gsfc.nasa.gov/frontmenu_dsp.cfm to verify that this is the correct version prior to use.

Middle Packet

	PACKET PRIMARY HEADER							User Data Field							
	Verson No.	Packet Identification			Packet Sequence Control (PSC)		Packet Length	VIIRS Packet ID		HR Format			HR Science Data		
		Type Indicator	Sec Hdr Flag	APID	Sequence Flags	Sequence Count		VIIRS Sequence Count	Packet Time	Format Version	Instrument Number	Spare	HR Detector Data	Pad Byte as needed	TOTAL
Bits	3	1	1	11	2	14	16	32	64	8	8	16	depends on band type	8	varies
Octets	2				2		2	4	8	1	1	2	depends on band type	1	varies
Value	000	0	0	varies	00	varies	varies	varies	varies	2	2	zeros	varies	zeros	

No Secondary Header

Middle packet of Segmented data

Optional as needed

	Detector Data											
	Integrity Check*	Self Test Data Pattern	Reserved	Band	Detector	Sync Word Pattern	Reserved	Fill Data	Chksum Offset	Aggr 1	Chksum	Sync Word
Bits	1	4	11	8	8	32	512	16	16	varies	32	32
Octets	2			1	1	4	64	2	2	varies	4	4
Value	varies	varies	varies	varies	varies	varies	varies	varies	varies	varies	varies	TBS

0 = No Error
1 = Data Error

Filled with zeros if unused

0 - 15 for Moderate
0 - 31 for Imaging

Filled with zeros if unused

0000 Live Data
0001-1111 Test Data Patterns

Note: Field size is configurable, by varying the number of samples per aggregation zone. with a Table ID 7 Upload

The maximum field size for
Moderate Resolution Bands is 3840 octets;
Imaging Bands is 7680 octets;
Day-Night Band is 3840 octets.

Figure 4.4-33. VIIRS Diagnostic Middle Packet Format

Check the JPSS MIS Server at https://jpssmis.gsfc.nasa.gov/frontmenu_dsp.cfm to verify that this is the correct version prior to use.

Last Packet

	PACKET PRIMARY HEADER							User Data Field							
	Verson No.	Packet Identification			Packet Sequence Control (PSC)		Packet Length	VIIRS Packet ID		HR Format			HR Science Data		
		Type Indicator	Sec Hdr Flag	APID	Sequence Flags	Sequence Count		VIIRS Sequence Count	Packet Time	Format Version	Instrument Number	Reserved	HR Detector Data	Pad Byte as needed	
Bits	3	1	1	11	2	14	16	32	64	8	8	16	varies	8	varies
Octets	2				2		2	4	8	1	1	2	varies	1	varies
Value	000	0	0	varies	10	varies	varies	varies	varies	2	2	zeros	varies	zeros	

No Secondary Header

Last packet of Segmented data

Same format as specifed in Middle Packet description. Content will be single detector's data or continuation of band error data.

The maximum field size for Moderate Resolution Bands is 3840 octets; Imaging Bands is 7680 octets; Day-Night Band is 3840 octets.

Optional as needed

Figure 4.4-34. VIIRS Diagnostic Last Packet Format

Check the JPSS MIS Server at https://jpssmis.gsfc.nasa.gov/frontmenu_dsp.cfm to verify that this is the correct version prior to use.

Table 4.4-19. VIIRS Diagnostic First Packet User Data Fields

Start Bit	Bit Size	Mnemonic Name	Description	Units OR State Value	Conversion Coefficients (formula or C5,C4,C3,C2,C1,C0) OR State Name	Data Type
0	32	N/A	VIIRS Sequence Count	N/A	N/A	U
32	64	N/A	Packet Time	N/A	N/A	U
96	8	N/A	Format Version	N/A	N/A	U
104	8	N/A	Instrument Number	N/A	N/A	U
112	16	N/A	Spare	N/A	N/A	N/A
128	1	N/A	HAM Side	0 1	HAM Side A HAM Side B	B
129	1	N/A	Scan Synch	0 1	Servo OFF Servo ON and Synchronized	B
130	4	N/A	Self Test Data Pattern	0000_b 0001_b - 1111_b	Live Data Test Pattern Data	B
134	10	N/A	Reserved	N/A	N/A	N/A
144	32	N/A	Scan number	N/A	N/A	U
176	64	N/A	Scan Terminus	N/A	N/A	U
240	8	N/A	Sensor Mode	0 1 2 3 4 5 6	LAUNCH ACTIVATION OUTGAS DIAGNOSTIC OPERATIONAL DAY OPERATIONAL NIGHT SAFE	U
248	8	N/A	VIIRS Model	1 2 3 4	EDU Platform FU1 FU2 FU3	U
256	16	N/A	FSW Version	0 1 2 3	IMPOUND REV A REV B REV C	U

Check the JPSS MIS Server at https://jpssmis.gsfc.nasa.gov/frontmenu_dsp.cfm to verify that this is the correct version prior to use.

Start Bit	Bit Size	Mnemonic Name	Description	Units OR State Value	Conversion Coefficients (formula or C5,C4,C3,C2,C1,C0) OR State Name	Data Type
272	32	N/A	Band Control Word (BCW) -- Bit Field	N/A	N/A	U
272	9	N/A	BCW -- Don't Care	N/A	N/A	N/A
281	5	N/A	BCW -- Band ID	00001 00010 00011 00100 00101 00110 00111 01000 01001 01010 01011 01100 01101 01110 01111 10000 10001 10010 10011 10100 10101 10110 10111	DNB M1 M2 M4 M3 I1 I2 M7 M5 M6 M13 M12 I4 I3 M10 M11 M8 M9 I5 M16A M16B M15 M14	B
286	2	N/A	BCW -- Active/Width Bits	00 01 10 11	Inactive Inactive Normal Partial	B
288	2	N/A	BCW -- ASP Boards	00 01 10 11	DNB ASP1 ASP2 ASP3	B
290	3	N/A	BCW -- ASP Channels	N/A	N/A	N/A
293	1	N/A	BCW -- Image/Moderate	0 1	Image Moderate	B
294	1	N/A	BCW -- Stagger (Delay 3 samples for the even number of pixel rows)	N/A	N/A	N/A
295	1	N/A	BCW -- Single or multi (dual) band	0 1	Single Multi	B
296	1	N/A	BCW -- Aggregation	0 1	No Yes	B
297	1	N/A	BCW -- Bowtie	0 1	No Bow Tie Deletion Bow Tie Deletion Applied	B
298	1	N/A	BCW -- Save as Predictor or TDI	0 1	No storage done Band stored in Scan Predictor RAM	B
299	1	N/A	BCW -- Spectral DPCM	0 1	No DPCM DPCM Performed	B
300	1	N/A	BCW -- Dual Out Sum	0 1	No averaging performed Current band is averaged with the band	B
301	3	N/A	BCW -- Discontinuity Correction	0 1 2 3 4 5 6 7	No Discontinuity offset Discontinuity Offset Register 1 Discontinuity Offset Register 2 Discontinuity Offset Register 3 Discontinuity Offset Register 4 Discontinuity Offset Register 5 Discontinuity Offset Register 6 Discontinuity Offset Register 7	U
304	16	N/A	First Sample Count	N/A	N/A	U
320	16	N/A	Number of Samples	N/A	N/A	U
336	960	N/A	Reserved	N/A	N/A	N/A
1296	16	N/A	Check Sum	N/A	N/A	U

Table 4.4-20. VIIRS Diagnostic Middle and Last Packet User Data Fields

Start Bit	Bit Size	Mnemonic Name	Description	Units OR State Value	Conversion Coefficients (formula or C5,C4,C3,C2,C1,C0) OR State Name	Data Type
0	32	N/A	VIIRS Sequence Count	N/A	N/A	U
32	64	N/A	Packet Time	N/A	N/A	U
96	8	N/A	Format Version	N/A	N/A	U
104	8	N/A	Instrument Number	N/A	N/A	U
112	16	N/A	Spare	N/A	N/A	N/A
128	1	N/A	Integrity Check Indicates Corrupted Detector Data	0 1	No Error Error	B
129	4	N/A	Self Test Data Pattern	0000_b 0001_b - 1111_b	Live Data Test Data patterns	B
133	11	N/A	Reserved	N/A	N/A	N/A
144	8	N/A	Band Raytheon internal data field.	N/A	N/A	N/A
152	8	N/A	Detector	N/A	N/A	U
160	32	N/A	Sync Word Pattern Sync Verify Data Pattern : 0xFF000063	N/A	N/A	U
192	512	N/A	Reserved	N/A	N/A	N/A
704	6	N/A	Aggregation 1 or 32-17 Fill Data -- All zeros	N/A	N/A	N/A
710	5	N/A	Aggregation 1 or 32-17 Fill Data -- reserved	N/A	N/A	N/A
715	1	N/A	Aggregation 1 or 32-17 Fill Data -- "X" field	0 1	Last compressed data located in bits 00:15 of last data word Last compressed data located in bits 16:31 of last data word	B
716	4	N/A	Aggregation 1 or 32-17 Fill Data -- undefined	N/A	N/A	N/A
720	16	N/A	Aggregation 1 Check Sum Offset	N/A	N/A	U
736	20640	N/A	Aggregation 1	N/A	N/A	U
21376	32	N/A	Aggregation 1 Check Sum	N/A	N/A	U
21408	32	N/A	Aggregation 1 Sync Word	N/A	N/A	U
21440	8	N/A	Pad byte (as needed)	N/A	N/A	N/A

4.4.4.4 Housekeeping Data

Diagnostic Mode telemetry (APID 773) is identical in structure and format to the normal health and status telemetry (APID 768). The format of APID 768 is documented in the NPP Spacecraft C&T Handbook. As these telemetry packets are housekeeping data and not mission data, the formats will not be provided in this document.

4.4.4.5 Memory Dump

The Memory Dump Packet (APID 780) is initiated in response to a dump command. The dump packet structure parallels the memory load packet structure and contains a Format Header, Memory Dump Header, Memory Dump Data, and Checksum. Dump Packets are grouped packets and are restricted to 65,506 octets per CCSDS packet. There is a maximum of 256 CCSDS packets per packet group.

The Format Header contains the VIIRS sequence count, the packet time, the software version, the instrument number, and 16 spare bits.

The Memory Dump Header contains the memory address, the amount of memory dumped, the type of memory dumped, and 8 spare bits. There are three types of memory that can be dumped: RAM, EEPROM, and Tables. The MEM Select indicates the type of memory selected for the dump: 0 - RAM, 1 - EEPROM, and 2 - Table. There are two16-bit MEM Address subfields. For RAM and EEPROM dumps, they are the memory target address most significant word (MSW) and least significant word (LSW). The target address is the start address for the memory dumped. For tables they indicate the Table ID (TID) and offset in words (OIW) of where the data was read. The MEM Data Size field reflects the number of octets remaining to be dumped in the current and any following packets of the same grouped packet. This field is an even number of octets and does not include the checksum. The MEM Data field contains the actual memory or table data and is an even number of octets.

Finally, there is a User Check Sum, which is an arithmetic check sum of octets in the User Data Field (modulo 65536).

The VIIRS uses either grouped or ungrouped packets depending on the size of the memory dump. The largest memory area possible to dump, 4 MB, requires a group of 65 packets. The timestamp in the Secondary Header represents the time the memory is captured. Figure 4.4-35 through Figure 4.4-38 illustrates the structure of the memory dump packets. Table 4.4-21 lists the user data fields.

Check the JPSS MIS Server at https://jpssmis.gsfc.nasa.gov/frontmenu_dsp.cfm to verify that this is the correct version prior to use.

	PACKET PRIMARY HEADER							SECONDARY HEADER	User Data Field													
	Verson No.	Packet Identification			Packet Sequence Control		Packet Length		Format Header					Memory Dump Header						Memory Dump Data	User Check Sum	
		Type Indicator	Sec Hdr Flag	APID	Sequence Flags	Sequence Count		Time of Day	VIIRS Sequence Count	Packet Time	Format Version	Intrument Number	Spare	MEM Address		MEM Data Size		MEM Select	Spare	MEM Data (Even Octets)		TOTAL
Bits	3	1	1	11	2	14	16	64	32	64	8	8	16	16	16	16	16	8	8	Nx8	16	varies
Octets	2				2		2	8	4	8	1	1	2	2	2	2	2	1	1	N	2	varies
Value	000	0	1	0x30C	11	varies	varies	varies	varies	varies	1	2	zeros	varies	varies	varies	varies	varies	varies	varies	varies	varies

Telemetry Packet

Secondary Header Present

Incremental starting at 1.

Version-1 CCSDS

- If MEM Select is set for RAM or EEPROM, then 1st 16-bits is MSW & 2nd 16-bits is LSW of target address where to read this segment's data.
- If MEM Select is Table dump, then 1st 16-bits is Table ID & 2nd 16-bits represents offset in words into Table where data is read.

Reflects number of octets remaining to be dumped: 1st 16 bits are MSW & 2nd 16 bits are LSW.

Must be even number of octets & does not include the Checksum.

Type of Dump
00 - RAM
01 - EEPROM
02 - Table
Others- Reserved

Arithmetic Checksum of 16 bit words in the User Data Field

Figure 4.4-35. VIIRS Ungrouped Memory Dump Packet Format

	PACKET PRIMARY HEADER							SECONDARY HEADER			User Data Field													
	Verson No.	Packet Identification			Packet Sequence Control		Packet Length				Format Header					Memory Dump Header						Memory Dump Data	User Check Sum	
		Type Indicator	Sec Hdr Flag	APID	Sequence Flags	Sequence Count		Time of Day	Number of Packets	Spare	VIIRS Sequence Count	Packet Time	Format Version	Intrument Number	Spare	MEM Address		MEM Data Size		MEM Select	Spare	MEM Data (Even Octets)		TOTAL
Bits	3	1	1	11	2	14	16	64	8	8	32	64	8	8	16	16	16	16	16	8	8	523696	16	524048
Octets	2				2		2	8	1	1	4	8	1	1	2	2	2	2	2	1	1	65462	2	65506
Value	000	0	1	0x30C	01	varies	0xFFDC	varies	varies	zeros	varies	varies	1	2	zeros	varies	varies	varies	varies	varies	varies	varies	varies	

Telemetry Packet

Secondary Header Present

Segmented Load packets allowed.

Version-1 CCSDS

This is a running total count of all types of packets sent by VIIRS since power on or 32-bit rollover.

- If MEM Select is set for RAM or EEPROM, then 1st 16-bits is MSW & 2nd 16-bits is LSW of target address where to read this segment's data.
- If MEM Select is Table dump, then 1st 16-bits is Table ID & 2nd 16-bits represents offset in words into Table where data is read.

Reflects number of octets remaining to be dumped: 1st 16 bits are MSW & 2nd 16 bits are LSW.

Must be even number of octets & does not include the Checksum.

Type of Dump
00 - RAM
01 - EEPROM
02 - Table
Others- Reserved

Arithmetic Checksum of 16 bit words in the User Data Field

Figure 4.4-36. VIIRS Grouped Memory Dump First Packet Format

Check the JPSS MIS Server at https://jpssmis.gsfc.nasa.gov/frontmenu_dsp.cfm to verify that this is the correct version prior to use.

	PACKET PRIMARY HEADER							User Data Field													
	Verson No.	Packet Identification			Packet Sequence Control		Packet Length	Format Header					Memory Dump Header						Memory Dump Data	User Check Sum	
		Type Indicator	Sec Hdr Flag	APID	Sequence Flags	Sequence Count		VIIRS Sequence Count	Packet Time	Format Version	Intrument Number	Spare	MEM Address		MEM Data Size		MEM Select	Spare	MEM Data (Even Octets)		TOTAL
Bits	3	1	1	11	2	14	16	32	64	8	8	16	16	16	16	16	8	8	523776	16	524048
Octets	2				2		2	4	8	1	1	2	2	2	2	2	1	1	65472	2	65506
Value	000	0	0	0x30C	00	varies	0xFFDC	varies	varies	1	2	zeros	varies	varies	varies	varies	varies	varies	varies	varies	

Version-1 CCSDS

Telemetry Packet

No Secondary Header Present

This is a running total count of all types of packets sent by VIIRS since power on or 32-bit rollover.

- If MEM Select is set for RAM or EEPROM, then 1st 16-bits is MSW & 2nd 16-bits is LSW of target address where to read this segment's data.
- If MEM Select is Table dump, then 1st 16-bits is Table ID & 2nd 16-bits represents offset in words into Table where data is read.

Reflects number of octets remaining to be dumped: 1st 16 bits are MSW & 2nd 16 bits are LSW.

Must be even number of octets & does not include the Checksum.

Type of Dump
00 - RAM
01 - EEPROM
02 - Table
Others- Reserved

Arithmetic Checksum of 16 bit words in the User Data Field (modulo 65536.)

Figure 4.4-37. VIIRS Grouped Memory Dump Middle Packet Format

	PACKET PRIMARY HEADER							User Data Field													
	Verson No.	Packet Identification			Packet Sequence Control		Packet Length	Format Header					Memory Dump Header						Memory Dump Data	User Check Sum	
		Type Indicator	Sec Hdr Flag	APID	Sequence Flags	Sequence Count		VIIRS Sequence Count	Packet Time	Format Version	Intrument Number	Spare	MEM Address		MEM Data Size		MEM Select	Spare	MEM Data (Even Octets)		TOTAL
Bits	3	1	1	11	2	14	16	32	64	8	8	16	16	16	16	16	8	8	up to 523776	16	up to 524048
Octets	2				2		2	4	8	1	1	2	2	2	2	2	1	1	up to 65472	2	up to 65506
Value	000	0	0	0x30C	10	varies	varies	varies	varies	1	2	zeros	varies	varies	varies	varies	varies	varies	varies	varies	varies

Version-1 CCSDS

Telemetry Packet

No Secondary Header Present

This is a running total count of all types of packets sent by VIIRS since power on or 32-bit rollover.

- If MEM Select is set for RAM or EEPROM, then 1st 16-bits is MSW & 2nd 16-bits is LSW of target address where to read this segment's data.
- If MEM Select is Table dump, then 1st 16-bits is Table ID & 2nd 16-bits represents offset in words into Table where data is read.

Reflects number of octets remaining to be dumped: 1st 16 bits are MSW & 2nd 16 bits are LSW.

Must be even number of octets & does not include the Checksum.

Type of Dump
00 - RAM
01 - EEPROM
02 - Table
Others- Reserved

Arithmetic Checksum of octets in the User Data Field (modulo 65536.)

Figure 4.4-38. VIIRS Grouped Memory Dump Last Packet Format

Table 4.4-21. VIIRS Memory Dump Packet User Data Fields

Start Bit	Bit Size	Mnemonic Name	Description	Units OR State Value	Conversion Coefficients (formula or C5,C4,C3,C2,C1,C0) OR State Name	Data Type
0	32	N/A	VIIRS Sequence Count	N/A	N/A	U
32	64	N/A	Packet time	N/A	N/A	U
96	8	N/A	SW version (Format Header)	N/A	N/A	U
104	8	N/A	Instrument (Format Header)	N/A	N/A	U
112	16	N/A	Spare (Format Header)	N/A	N/A	N/A
128	32	N/A	MEM Address (Memory Dump Header)	N/A	N/A	U
160	32	N/A	MEM Data Size (Memory Dump Header)	N/A	N/A	U
192	8	N/A	MEM Select (Memory Dump Header)	N/A	N/A	U
200	8	N/A	Spare (Memory Dump Header)	N/A	N/A	N/A
208	varies	N/A	Memory DumpData	N/A	N/A	U
varies	16	N/A	User Check Sum	N/A	N/A	U

4.4.4.6 Test Packet

If necessary to assess VIIRS to spacecraft communication, VIIRS can be commanded to generate fixed Test Packets which would be sent continuously, one per scan, until disabled by command. Test Packets would be transmitted via the unique APID 770, independent of mode, and would have no impact to ongoing Telemetry or Science Data collection. The Test Packet consists of a packet header and a fixed data pattern of 250 ‘CC’ hex characters. This packets is only transmitted between VIIRS and the Spacecraft and is not intended to be transmitted to the ground station. Figure 4.4-39 shows the format of the VIIRS Test Packet.

	PACKET PRIMARY HEADER							USER DATA FIELD	
	Version No.	Packet Identification			Packet Sequence Control (PSC)		Packet Length	Test Packet Data	
		Type Indicator	Sec Hdr Flag	APID	Sequence Flags	Sequence Count	[1]		TOTAL
Bits	3	1	1	11	2	14	16	2000	2048
Octets	2				2		2	250	256
Value	000	0	0	0x302	11	varies	F9	0xCC	

0 = Telemetry Packet

No Secondary Header

By APID sequence

Definitions per A.2.2 Unsegmented

Figure 4.4-39. VIIRS Test Packet Format

4.5 CERES

4.5.1 Introduction

The Clouds and the Earth's Radiant Energy System (CERES) trend the Earth's radiation budget by measuring solar-reflected and Earth-emitted radiation from the top of the atmosphere to the Earth's surface. In combination with other NPP instruments, it contributes to determining cloud properties. The CERES instrument provides radiometric measurements of the Earth's atmosphere from three broadband bolometer sensor channels: a shortwave channel (0.3 μm – 5.0 μm), a total channel (0.3 μm - 100 μm), and an infrared window (longwave) channel (8.2 μm - 11.8 μm). The instrument can scan the sensors in two axes, azimuth and elevation. The CERES will scan primarily in an elevation plane orthogonal to the NPP satellite forward velocity. This normal cross-track scan takes 6.6 seconds, starting at a view of space beyond the Earth's limb, scanning 140 degrees across nadir and beyond the opposite Earth limb to a space view, continuing to an internal calibration system, and returning again. A view of the CERES is in Figure 4.5-1.

Figure 4.5-1. CERES Instrument

The CERES has no requirements for generating NPP EDRs. The CERES data produce Climate Data Records of Earth's radiative fluxes.

4.5.2 Instrument Function

There are two major instrument assemblies; the sensor scan assembly (SSA) and the pedestal assembly. The sensor scan assembly is mounted to a rotating azimuth gimbal allowing rotation of the entire assembly. The stationary pedestal/baseplate is mounted to the spacecraft. An exploded view of the instrument is shown in Figure 4.5-2.

Check the JPSS MIS Server at https://jpssmis.gsfc.nasa.gov/frontmenu_dsp.cfm to verify that this is the correct version prior to use.

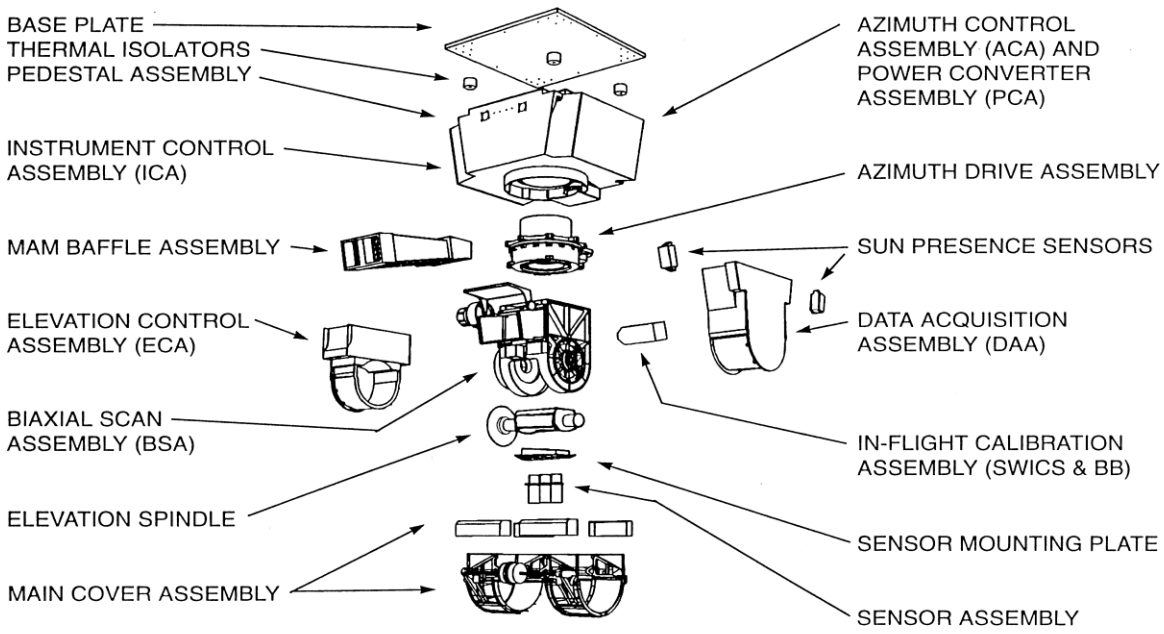

Figure 4.5-2. CERES Exploded View

The Sensor Scan Assembly (SSA) consists of the following subassemblies: the sensor module assembly (SMA), the biaxial scan assembly (BSA), the internal calibration module (ICM) consisting of a shortwave calibration lamp (SWICS) and a blackbody assembly (ICSBB), the mirror attenuator mosaic (MAM) assembly, the sun presence sensors (SPS), the alignment cube assembly, the data acquisition assembly (DAA), and the data acquisition converter assembly (DCA). The entire assembly can be rotated in azimuth by command.

The Sensor Module Assembly (SMA) consists of three sensors mounted on a common support plate. Each sensor has a two-element reflective telescope, stray light baffling, and a pair of thermistor bolometer flakes configured as active and compensating elements. One sensor assembly provides no optical spectral filtering, and is referred to as the total channel (TC). The other channels employ spectral bandpass filters to implement shortwave (SW) and longwave (LW) channel responses.

The ICM sources provide repeatable radiation levels to calibrate all three sensors. The blackbody source, a temperature-controlled cavity, calibrates the TC and LW channel. The SWICS, a programmable incandescent tungsten lamp and photodiode, is used to calibrate the SW channel. It also verifies the SW channel MAM calibration results. The MAM provides an attenuated solar calibration source. Its indented surface reflects sunlight during solar calibration that calibrates the SW and TC channels.

The Biaxial Scan Assembly (BSA) consists of the elevation drive, the elevation control assembly (ECA), the azimuth drive, the azimuth brake/caging mechanism, as well as contamination cover,

Check the JPSS MIS Server at https://jpssmis.gsfc.nasa.gov/frontmenu_dsp.cfm to verify that this is the correct version prior to use.

MAM cover and solar sensors. The SMA and telescopes are mounted on the elevation gimbal assembly. A brushless DC motor drives the assembly; a 16-bit optical encoder determines its absolute position. A magnetic detent is used to cage the elevation drive assembly in the stowed position. The elevation drive is used to sweep the sensors field of view across the earth.

The ECA houses the electronic circuitry that controls the scanning motion of the elevation gimbal, reads the gimbal position from the encoder and also drives the motors for the main contamination cover and the MAM cover. The azimuth drive rotates the entire SSA through 350 degrees of a circle. The azimuth drive is prevented from rotating >350 degrees by means of a hard stop located on the outside flange of the motor. A brushless DC motor (similar to the elevation drive) drives the azimuth of the SSA. Control for the azimuth drive is located in the Azimuth Control Assembly located on the instrument pedestal. Rotating the brake against the azimuth drive shaft applies the brake. Caging of the azimuth drive is accomplished by first driving the azimuth to the cage position near the zero degree orientation. Then the azimuth brake is rotated until the azimuth drive is effectively caged.

The Data Acquisition Assembly (DAA) houses the microprocessor controller for the SSA, analog and digital circuitry used for conditioning and digitizing the main sensor signals as well as sensor channel and blackbody heater drivers, SWICS control and monitoring electronics, and solar sensor interface electronics. To minimize noise on the sensitive signal lines the DAA is partitioned into 3 separate sections: the filter section, the analog section and the digital section. The digital section contains the Data Acquisition Processor (DAP) and the digital input/output circuitry. The analog section includes the A/D converter and the heater driver circuitry. The A/D converter handles conversion of sensor signals and telemetry signals of the SSA. The heater driver circuitry provides a precision temperature control loop for the heater in the sensors. The filter section of the DAA contains the signal conditioning and filters for the main sensor signals, and the signal conditioners and multiplexers for the sensor module telemetry. The filter section also contains power regulators for the power supplied to the sensor module and filters and for the power supplied to the analog section of the DAA.

The Data Acquisition Converter Assembly (DCA) houses the power converter assemblies that provide power for the sensor electronics and the analog to digital converters (ADC). Power for these items is isolated from the rest of the instrument electronics. The DCA also houses the 130 Volt high voltage power converter for the sensor bridge excitation. Finally the DCA houses the power converter for the survival heaters used on the SSA. A cutoff circuit shuts down the survival converter whenever 28 Volts is present on the inputs to the operational converters.

The pedestal assembly provides the main load path for environmental forces during launch and provides structural support for the instrument during the mission. It consists of the baseplate, the Instrument Control Assembly (ICA), the Azimuth Control Assembly (ACA), the Power Converter Assembly (PCA) and power diode filter assembly. The overall instrument operations are under control of the ICA. The spacecraft interface board (SCIF) within the ICA Control Processor (ICP) is responsible for receiving, verifying and routing of instrument commands and for formatting and transmitting instrument telemetry. The ICA controls operation of the azimuth gimbal through the Azimuth Control Assembly and operates the azimuth brake mechanism.

Check the JPSS MIS Server at https://jpssmis.gsfc.nasa.gov/frontmenu_dsp.cfm to verify that this is the correct version prior to use.

The instrument collects a single set of telemetry and formats it into two streams: science telemetry and housekeeping telemetry. The housekeeping telemetry is a subset of the science telemetry. All data found in the housekeeping telemetry may be found in the science telemetry. The instrument generates housekeeping telemetry at a rate of 2048 bits every 6.6 seconds. Science data is generated at a rate of 1 packet every 6.6 seconds.

4.5.3 Modes and Packet Structure

The CERES has the following modes of operation described below:

- Off/Launch
- Survival
- Safe
- Diagnostic
- Science

Figure 4.5-3 is a simplified diagram showing the CERES mode transitions. The CERES FM5 Instrument Operations Manual comprehensively describes all CERES modes and scan types. The CERES proceeds through an Initialization mode to Safe mode when first activated. After commanded to the Standby/Hold Science mode, internal sequences of commands then determine the Science sub-mode. As long as the internal sequences are used to configure CERES, the telemetry parameter ISEQMODE indicates the mode of the instrument. If individual commands are used, the ISEQMODE parameter will not necessarily reflect the CERES mode. The instrument can transition autonomously to Safe mode via internal sequence from any mode.

Table 4.5-1. CERES Mission Data Packet Types

VC ID	$APID_{10}$	Telemetry Packet Name	Data Rate (bps) by Mode	Downlink		Packet Size (octets)
			Operational or Diagnostic	HRD	SMD	
0	146	Housekeeping Packet	Note 1	✓	✓	Note 1
24	147	Calibration	8477.6		✓	6994
24	148	Fixed Pattern	8477.6		✓	6994
24	149	Science	8477.6		✓	6994
24	150	Diagnostic (Note 2)	8477.6		✓	6994
0	155	LEO&A	Note 1	✓	✓	Note 1

1. Documented in the NPP Command & Telemetry Handbook
2. The Diagnostic Packet may contain sensor data, memory dump data, gimbal data, or execution time data depending on what is commanded into it. The format is the same, only the content of the fields changes.

The CERES data packets their size and data rates are listed in Table 4.5-1. The packets output by the CERES depend on the internal sequence used to configure the instrument and any individual commands overriding the internal sequence. Because individual commands allow any of these packets to be output in any mode, Table 4.5-1 does not distinguish the packet data rates by mode. Table 4.5-2 indicates the Mission Data packet type for a given instrument mode when commanded by internal sequence. Whenever the CERES is powered it outputs one of four types of Mission Data packets – Science packets, Calibration packets, Diagnostic packets and Fixed

Check the JPSS MIS Server at https://jpssmis.gsfc.nasa.gov/frontmenu_dsp.cfm to verify that this is the correct version prior to use.

Pattern packets. Fixed Pattern packets will not be used on orbit and are not described in this document. The CERES packets also uses an 'internal data indicator' flag to further identify the data as science, calibration, or one of several types of diagnostic data. The packets output as a result of the CERES internal sequences are described with each mode in the sections below.

Table 4.5-2. CERES Mission Data Packets by Internal Sequence

Mode ID	Mode	Mission Data Packet Type
0	Launch (Off)	None
1	Survival	None
2	Initialization	N/A
3	Safe	Diagnostic
4	Diagnostic	Diagnostic
5	Standby/Hold	Diagnostic
6	Cross-Track	Science
7	Biaxial	Science
8	Solar Calibration	Calibration
9	Contamination Safe	Diagnostic

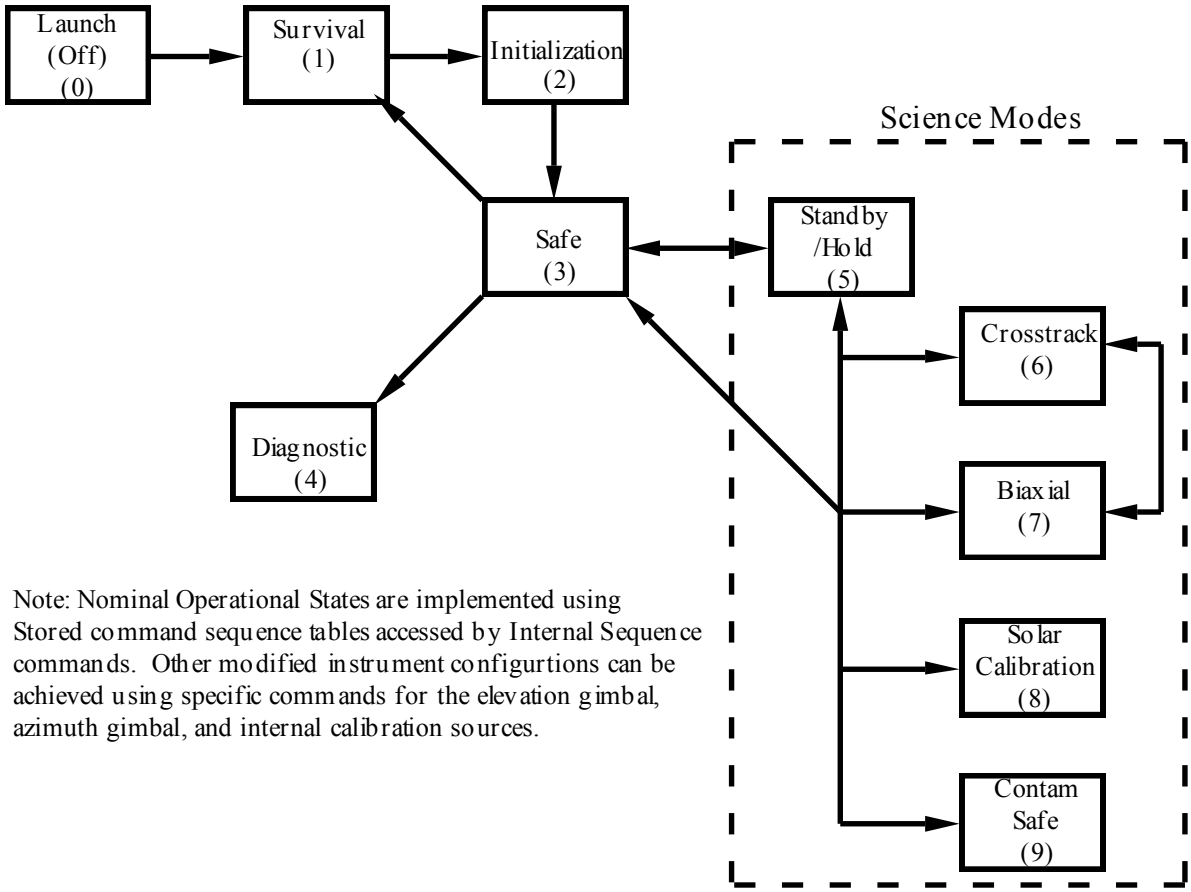

Figure 4.5-3. CERES Simplified Mode Diagram

4.5.3.1 Off, Launch and Survival Modes

The CERES is launched with operational power removed and with survival heater power removed. In Survival mode, only survival heater power is applied. No data are output in any of these modes. Survival mode instrument temperatures are monitored by means of passive temperature sensors via spacecraft telemetry.

4.5.3.2 Safe Mode

The Safe mode allows the instrument to be put into a configuration that will prevent damage to the instrument in the event of a loss of spacecraft operational power or attitude control. The transition to Safe Mode can be executed at any time. The motion of the both axes is stopped and the azimuth brake is applied. The instrument outputs the Diagnostic, Housekeeping and LEO&A packets. Since the telescope is stowed, the science packet data indicator in the Diagnostic packet is set to 'No_Archive_Data'.

4.5.3.3 Diagnostic Mode

Diagnostic mode is meant for CERES table loads, troubleshooting and instrument configuration changes not allowed in the other modes. Loads of the scan table, the internal sequence command table, and memory will occur when the CERES is in real-time contact with the ground. The

Check the JPSS MIS Server at https://jpssmis.gsfc.nasa.gov/frontmenu_dsp.cfm to verify that this is the correct version prior to use.

Housekeeping and LEO&A packets are active, as well as Diagnostic packet with the data indicator flag set to 'No_Archive_Data'. Other Diagnostic, Science or Calibration packets can be enabled by command.

4.5.3.4 Science Modes

Brief descriptions of the sub-modes within Science Mode are given below. The sub-mode determines whether Science or Calibration packets are generated and what type of data is in the Science packet, unless the internal sequence configuration is overridden by ground commands.

4.5.3.4.1 Cross-track Scan Mode

In the Cross-track Scan mode, the elevation gimbal performs either a normal-Earth, short-Earth or nadir scan while the azimuth gimbal holds its position fixed. The normal-Earth scan shown in Figure 4.5-4 will be used as the primary science mode for NPP. It starts with the sensors viewing Space, scans across Earth, pauses at a space view, proceeds to dwell on the internal calibration source and then reverses itself. Science packets are produced once per scan, every 6.6 seconds. The CERES continues to output the Housekeeping and LEO&A packets.

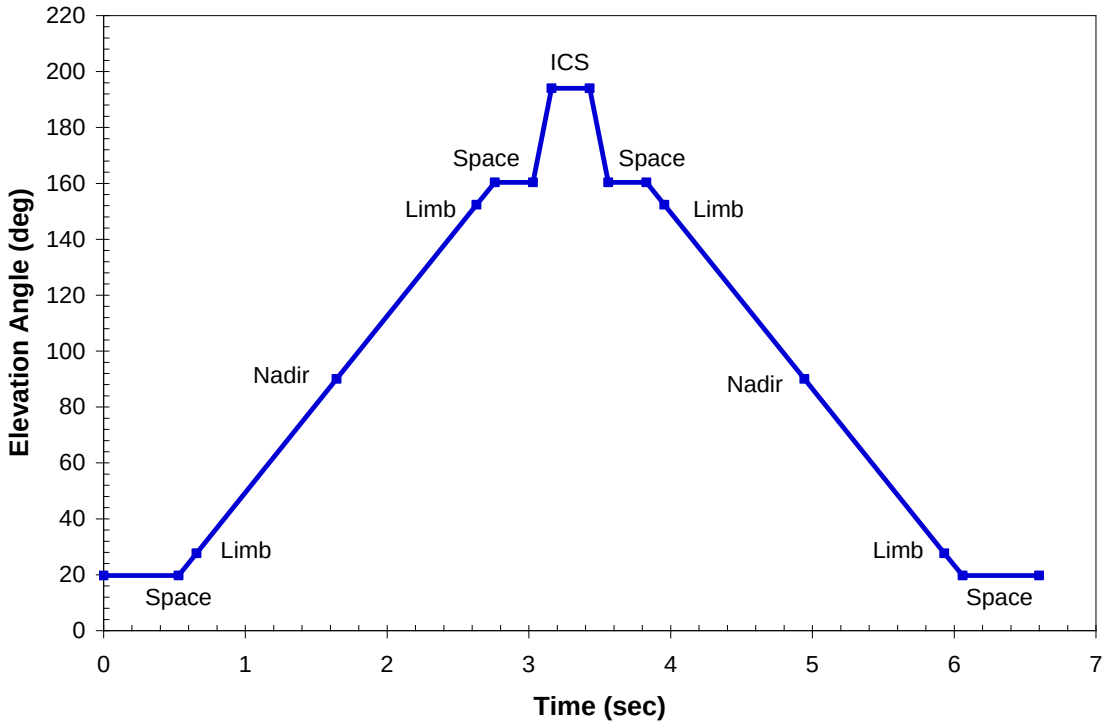

Figure 4.5-4. CERES Normal Earth Scan Elevation Profile

4.5.3.4.2 Biaxial Scan Mode

Both the azimuth and elevation gimbals are active in this mode. The elevation drive typically executes a normal-Earth scan. It can switch to a short-Earth scan depending on the Sun

orientation. The azimuth gimbal rotates back and forth 180 degrees. The Biaxial Scan mode is not intended to be used on NPP.

4.5.3.4.3 Solar Calibration Mode

Solar calibrations are performed approximately every two weeks in one of two ways. First, the azimuth gimbal is positioned so solar radiation is incident of the Mirror Attenuator Mosaic (MAM) surface as the sun sets. The elevation drive switches between solar, MAM and ICS views, as shown in Figure 4.5-5. Alternately, the azimuth gimbal scans the MAM baffle from space across the sun to space and back while the elevation gimbal positions the sensors to maintain a constant view of the MAM. This scanning continues while the sun sets through the MAM baffle field-of-view. In addition to Housekeeping and LEO&A packets, the CERES produces the Calibration packet in this mode. Science packets are not produced when the internal sequence is used.

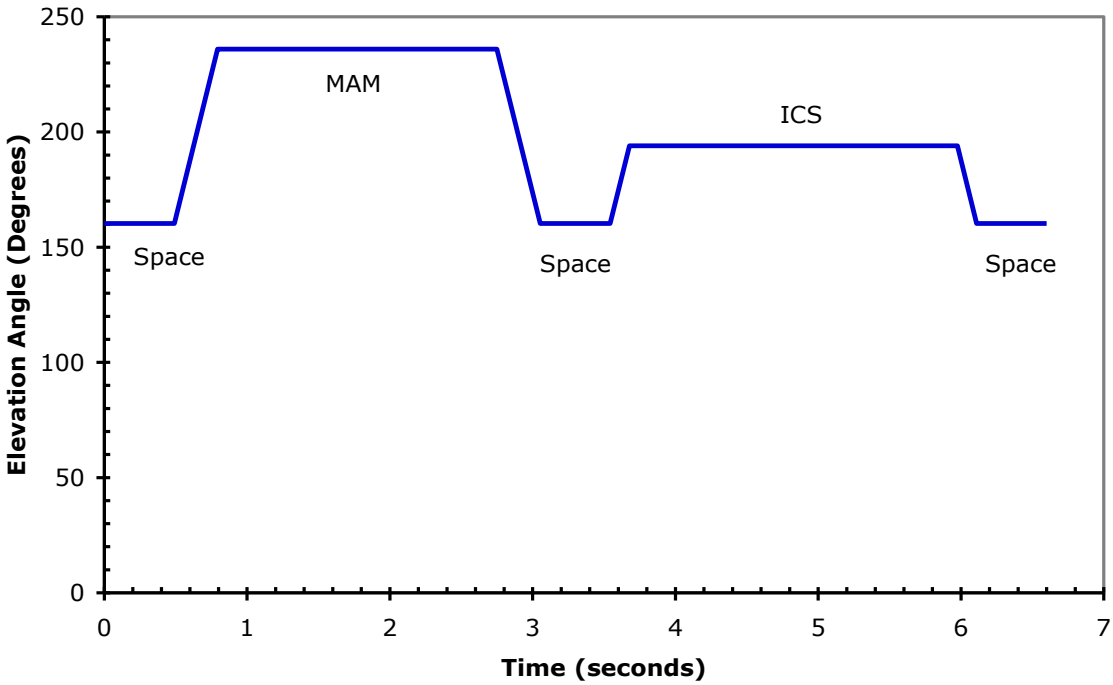

Figure 4.5-5. CERES Solar Calibration Scan Elevation Profile

4.5.3.4.4 Contamination Safe Mode

The CERES stows the elevation gimbal, rotates the azimuth drive to a contamination-safe position and turns off all calibration sources in Contamination Safe mode. The instrument remains in this mode for 10 minutes unless interrupted by internal command sequence to go to Safe or Standby or to reenter Contamination Safe mode. Upon expiration of waiting period, the CERES will transition to Standby mode. While in Contamination Safe, the Diagnostic,

Housekeeping and LEO&A packets are output. The data indicator in the Diagnostic packet is set to 'No_Archive_Data'.

4.5.3.4.5 Standby/Hold Mode

The standby/hold mode is used to transition the CERES between Science modes and from Safe to Science mode. The CERES is operationally ready in this mode, though the elevation gimbal is stowed. It outputs the Diagnostic, Housekeeping and LEO&A packets. The data indicator in the Diagnostic packet is set to 'No_Archive_Data'.

4.5.4 Mission Data

The CERES transfers its CCSDS-formatted data to the spacecraft over the 1553B bus. The Science, Calibration, and Diagnostic packets all have the same basic format with slight customizations for each one. All packets start with a six byte primary header and an 8-byte secondary header. The timestamp in the secondary header represents the time at the beginning of each 6.6-second scan. The timestamp is in the standard UTC format in Table 4.1-3.

Because the CERES was built before NPP/NPOESS, its mission data packets differ from the other instruments in two significant ways. First, the CERES does not have a separate engineering packet. Secondly, it does not exclude housekeeping telemetry from its mission data packets. Instead, housekeeping and engineering data are contained in each of the mission data packets. The tables showing the CERES packet content in the following sections are abbreviated mainly because the engineering data is multiplexed with the detector data. The CERES outputs one engineering value every sample period, for a total of 660 engineering values every scan. Instead of showing the engineering data sampled with the three detector data values and gimbal positions at every sample period, a separate table will show the engineering data variables output with each of the 660 sample periods. The sampling is the same for all the mission data packets. All fields in the CERES data packets are big endian.

4.5.4.1 Science Data

The CERES generates one science data packet (APID 149) every 6.6 second scan cycle when none of the other Mission Data packets are active. Each packet begins with identification fields, contains 660 samples of engineering, sensor, and gimbal data, and ends with instrument housekeeping data. For each 10 msec sample period, the CERES reports one of 75 engineering data variables, the outputs of the shortwave, longwave and total channel sensors, and the elevation and the azimuth position. The 75 engineering data variables are not reported at equal intervals. Their order of occurrence repeats three times over the 6.6 second scan. The first 220 engineering data entries are listed separately in Table 4.5-4. These same fields are repeated in samples 220 to 439 and 440 to 659.

The CERES Science Data packet is 6994 bytes in length. Its structure is shown in Figure 4.5-6. When it is output, the average data rate is 8477.6 bps. The primary header is documented in the NPP X-band Data Format ICD. The secondary header contains the timestamp marking the beginning of the CERES scan. Its format is the standard UTC format in Table 4.1-3. The contents of the 6980-byte user data field are shown in Table 4.5-3. Listing all of the fields repeated 660 times is impractical, so fields 2 to 658 are consolidated on one line.

Check the JPSS MIS Server at https://jpssmis.gsfc.nasa.gov/frontmenu_dsp.cfm to verify that this is the correct version prior to use.

CERES Science Data Packet **VERSION** **Aqua** **DATE:** **7/31/2002**

Fixed Packet Length 6994 Octets

	PACKET PRIMARY HEADER							SECONDARY HEADER	User Data Field									
	Verson No.	Packet Identification			Packet Sequence Control (PSC)		Packet Length		CERES Science Data									
		Type Indicator	Sec Hdr Flag	APID	Sequence Flags	Sequence Count		Time Data	Packet Identi-fication Data	Main Data, First Record						Main Data, Records 2-660	Instrument Status Data	
										Engr. Data	Shortwave Channel	Longwave Channel	Total Channel	Elevation Position	Azimuth Position			TOTAL
Bits	3	1	1	11	2	14	16	64	80	12	12	12	12	16	16	52720	2960	55952
Octets	2				2		2	8	10	3		3		2	2	6590	370	6994
Value	000	0	1	95_{16}	11	varies	$1B4B_{16}$	varies	varies	varies	varies	varies	varies	varies	varies	varies	varies	

0 = Telemetry Packet

Secondary Header Present

Standalone Packet

CERES Science Data				
CERES Packet Identification Data				
Quick Look Flag	Spare	Packet Info	Packet Counter	Spare
8	8	16	16	32
1	1	2	2	4
varies	0	varies	varies	0

Bits 0-3, the Packet Data Indicator (PKTIND), will be equal to 0, indicating a Science Data packet.

Figure 4.5-6. CERES Science Data Packet Format

Check the JPSS MIS Server at https://jpssmis.gsfc.nasa.gov/frontmenu_dsp.cfm to verify that this is the correct version prior to use.

Table 4.5-3. CERES Science Data Packet User Data Fields

Start Bit	Bit Size	Mnemonic Name	Description	Units OR State Value	Conversion Coefficients (formula or C5,C4,C3,C2,C1,C0) OR State Name	Data Type
0	6	N/A	unused	N/A	N/A	N/A
		QLOOKFLG		0	Quick Look Flag Not Set	
6	1		Quick Look Flag	1	Quick Look Flag Set	B
7	1	N/A	unused	N/A	N/A	N/A
8	8	N/A	spare	N/A	N/A	N/A
				0	Normal Science Data	
				1	Calibration Data	
				2	Memory Dump Data	
				3	Gimbal Data	
				4	Execution Time Data	
				5	No Archive Data	
				6	Fixed Pattern	
16	4	PKTIND	Science Packet Data Indicator	7-15	Not Used	B
20	5	PKTVERS	Packet Data Version	N/A	N/A	N/A
				0	FTM	
				1	PFM	
				2	FM1	
				3	FM2	
				4	FM3	
				5	FM4	
				6	FM5	
25	5	INSTR_ID	Instrument ID Number	7-31	Not Used	B
				0	Quick Look Flag Not Set	
30	1	QLOOKFLG	Science Packet Quicklook Flag Status	1	Quick Look Flag Set	B
				0	Based on Spacecraft Timing	
31	1	TIME_ID	Packet Timecode Indicator	1	Based on Instrument Timing	B
32	16	PKTCOUNT	Packet Counter	N/A	N/A	N/A
48	32	N/A	spare	N/A	N/A	N/A
80	12	N/A	Engineering Data -- sample 0	N/A	N/A	N/A
92	12	N/A	Shortwave Channel Data -- sample 0	N/A	N/A	N/A
104	12	N/A	Longwave Channel Data -- sample 0	N/A	N/A	N/A
116	12	N/A	Total Channel Data -- sample 0	N/A	N/A	N/A
128	16	N/A	Elevation Position -- sample 0	N/A	N/A	N/A
144	16	N/A	Azimuth Position -- sample 0	N/A	N/A	N/A
160	12	N/A	Engineering Data -- sample 1	N/A	N/A	N/A
172	12	N/A	Shortwave Channel Data -- sample 1	N/A	N/A	N/A
184	12	N/A	Longwave Channel Data -- sample 1	N/A	N/A	N/A
196	12	N/A	Total Channel Data -- sample 1	N/A	N/A	N/A
208	16	N/A	Elevation Position -- sample 1	N/A	N/A	N/A
224	16	N/A	Azimuth Position -- sample 1	N/A	N/A	N/A
240	52560	N/A	Samples 3-658	N/A	N/A	N/A
52800	12	N/A	Engineering Data -- sample 659	N/A	N/A	N/A
52812	12	N/A	Shortwave Channel Data -- sample 659	N/A	N/A	N/A
52824	12	N/A	Longwave Channel Data -- sample 659	N/A	N/A	N/A
52836	12	N/A	Total Channel Data -- sample 659	N/A	N/A	N/A
52848	16	N/A	Elevation Position -- sample 659	N/A	N/A	N/A
52864	16	N/A	Azimuth Position -- sample 659	N/A	N/A	N/A

Check the JPSS MIS Server at https://jpssmis.gsfc.nasa.gov/frontmenu_dsp.cfm to verify that this is the correct version prior to use.

Start Bit	Bit Size	Mnemonic Name	Description	Units OR State Value	Conversion Coefficients (formula or C5,C4,C3,C2,C1,C0) OR State Name	Data Type
				0	Safe Mode	
				1	Standby Mode	
				2	Crosstrack Mode	
				3	Biaxial Mode	
				4	Solar Calibration Mode	
				5	Diagnostic Configuration Mode	
				6	Internal Calibration Mode	
				7	Special Short Scan Mode	
				8	Contamination Safte Mode	
				9	Hold Mode	
				10	Abbrev'd Internal Cal Mode	
				11	Internal Sequence 11 (Unused)	
				12	Internal Sequence 12 (Unused)	
				13	Internal Sequence 13 (Unused)	
				14	Internal Sequence 14 (Unused)	
				15	Internal Sequence 15 (Unused)	
52880	5	ISEQMODE	Instrument Mode (Sequence #)	16-31	Not Available	B
				0	Safe Mode	
				1	Standby Mode	
				2	Crosstrack Mode	
				3	Biaxial Mode	
				4	Solar Calibration Mode	
				5	Diagnostic Configuration Mode	
				6	Internal Calibration Mode	
				7	Special Short Scan Mode	
				8	Contamination Safte Mode	
				9	Hold Mode	
				10	Abbrev'd Internal Cal Mode	
				11	Internal Sequence 11 (Unused)	
				12	Internal Sequence 12 (Unused)	
				13	Internal Sequence 13 (Unused)	
				14	Internal Sequence 14 (Unused)	
				15	Internal Sequence 15 (Unused)	
52885	5	ISEQPMODE	Instrument Previous Mode (Sequence #)	16-31	Not Available	B
				0	Command	
				1	Safe Hold	
				2	Solar Avoidance	
				3	Scan Timeout	
52890	3	SEQCHG	Mode (Sequence) Changed By	4-7	Not Used	B
52893	2	-------	Mode (Sequence) Has Been Changed	N/A		N/A
52895	1	N/A	Spare	N/A	N/A	N/A
52896	5	SEQINDEX	Sequence Command Index	N/A	N/A	N/A
				0	Executing Sequence Cmds	
				1	Waiting for Next Scan Period	
				2	Waiting For Azimuth	
				3	Sequence Complete	
52901	3	SEQEXEC	Sequence Execution Status	4-7	Not Used	B
52904	8	SEQTIME	Sequence Time to Next Command	N/A	N/A	N/A
52912	16	-------	Time Mark Sample Number	N/A		N/A
52928	16	-------	Time Mark Microseconds	N/A		N/A
52944	16	-------	Time Code Sample Number	N/A		N/A
52960	16	-------	Time Code Microseconds	N/A		N/A

Check the JPSS MIS Server at https://jpssmis.gsfc.nasa.gov/frontmenu_dsp.cfm to verify that this is the correct version prior to use.

Start Bit	Bit Size	Mnemonic Name	Description	Units OR State Value	Conversion Coefficients (formula or C5,C4,C3,C2,C1,C0) OR State Name	Data Type
52976	16	N/A	Spare	N/A	N/A	N/A
52992	16	CMDCOUNT	Instrument Command Counter	Counts	N/A	N/A
53008	16	ICMAIN_0	Instrument Cmd Stack Item 0 - Main	N/A	N/A	
53024	16	ICPARM_0	Instrument Cmd Stack Item 0 - Parm	N/A	N/A	
53040	10	ICSMPL_0	Instrument Cmd Stack Item 0 - Sample	Counts	N/A	N/A
				0	Cmd Accepted	
				1	Cmd Not Used	
				2	Cmd Index Out of Range	
				3	Cmd Param Out of Range	
				4	Not a Valid Short Command	
				5	Not a Valid Long Command	
				6	Incorrect Checksum	
				7	Cmd Exceeded Mode Index	
				8	Not Accepted in Current mode	
				9	Not Accepted in Seq Execution	
				10	Can't Use Brake w- Az Moving	
				11	Can't Cage Az in Current Pos	
				12	Can't Move Az w- Brake On	
				13	Mode Not Allowed in this Mode	
				14	Pos A Must Be < Pos B	
53050	5	ICSTAT_0	Instrument Cmd Stack Item 0 - Status	15-31	Not Used	B
				0	Spacecraft	
53055	1	ICSRC_0	Instrument Cmd Stack Item 0 - Source	1	Internal Sequence	B
53056	16	ICMAIN_1	Instrument Cmd Stack Item 1 - Main			
53072	16	ICPARM_1	Instrument Cmd Stack Item 1 - Parm			
53088	10	ICSMPL_1	Instrument Cmd Stack Item 1 - Sample	N/A	N/A	N/A
				0	Cmd Accepted	
				1	Cmd Not Used	
				2	Cmd Index Out of Range	
				3	Cmd Param Out of Range	
				4	Not a Valid Short Command	
				5	Not a Valid Long Command	
				6	Incorrect Checksum	
				7	Cmd Exceeded Mode Index	
				8	Not Accepted in Current mode	
				9	Not Accepted in Seq Execution	
				10	Can't Use Brake w- Az Moving	
				11	Can't Cage Az in Current Pos	
				12	Can't Move Az w- Brake On	
				13	Mode Not Allowed in this Mode	
				14	Pos A Must Be < Pos B	
53098	5	ICSTAT_1	Instrument Cmd Stack Item 1 - Status	15-31	Not Used	B
				0	Spacecraft	
53103	1	ICSRC_1	Instrument Cmd Stack Item 1 - Source	1	Internal Sequence	B
53104	16	ICMAIN_2	Instrument Cmd Stack Item 2 - Main			
53120	16	ICPARM_2	Instrument Cmd Stack Item 2 - Parm			
53136	10	ICSMPL_2	Instrument Cmd Stack Item 2 - Sample	Counts	N/A	N/A

Check the JPSS MIS Server at https://jpssmis.gsfc.nasa.gov/frontmenu_dsp.cfm to verify that this is the correct version prior to use.

Start Bit	Bit Size	Mnemonic Name	Description	Units OR State Value	Conversion Coefficients (formula or C5,C4,C3,C2,C1,C0) OR State Name	Data Type
				0	Cmd Accepted	
				1	Cmd Not Used	
				2	Cmd Index Out of Range	
				3	Cmd Param Out of Range	
				4	Not a Valid Short Command	
				5	Not a Valid Long Command	
				6	Incorrect Checksum	
				7	Cmd Exceeded Mode Index	
				8	Not Accepted in Current mode	
				9	Not Accepted in Seq Execution	
				10	Can't Use Brake w- Az Moving	
				11	Can't Cage Az in Current Pos	
				12	Can't Move Az w- Brake On	
				13	Mode Not Allowed in this Mode	
				14	Pos A Must Be < Pos B	
53146	5	ICSTAT_2	Instrument Cmd Stack Item 2 - Status	15-31	Not Used	B
				0	Spacecraft	
53151	1	ICSRC_2	Instrument Cmd Stack Item 2 - Source	1	Internal Sequence	B
53152	16	ICMAIN_3	Instrument Cmd Stack Item 3 - Main	N/A	N/A	
53168	16	ICPARM_3	Instrument Cmd Stack Item 3 - Parm	N/A	N/A	
53184	10	ICSMPL_3	Instrument Cmd Stack Item 3 - Sample	Counts	N/A	N/A
				0	Cmd Accepted	
				1	Cmd Not Used	
				2	Cmd Index Out of Range	
				3	Cmd Param Out of Range	
				4	Not a Valid Short Command	
				5	Not a Valid Long Command	
				6	Incorrect Checksum	
				7	Cmd Exceeded Mode Index	
				8	Not Accepted in Current mode	
				9	Not Accepted in Seq Execution	
				10	Can't Use Brake w- Az Moving	
				11	Can't Cage Az in Current Pos	
				12	Can't Move Az w- Brake On	
				13	Mode Not Allowed in this Mode	
				14	Pos A Must Be < Pos B	
53194	5	ICSTAT_3	Instrument Cmd Stack Item 3 - Status	15-31	Not Used	B
				0	Spacecraft	
53199	1	ICSRC_3	Instrument Cmd Stack Item 3 - Source	1	Internal Sequence	B
53200	16	ICMAIN_4	Instrument Cmd Stack Item 4 - Main	N/A	N/A	
53216	16	ICPARM_4	Instrument Cmd Stack Item 4 - Parm	N/A	N/A	
53232	10	ICSMPL_4	Instrument Cmd Stack Item 4 - Sample	Counts	N/A	N/A

Check the JPSS MIS Server at https://jpssmis.gsfc.nasa.gov/frontmenu_dsp.cfm to verify that this is the correct version prior to use.

Start Bit	Bit Size	Mnemonic Name	Description	Units OR State Value	Conversion Coefficients (formula or C5,C4,C3,C2,C1,C0) OR State Name	Data Type
				0	Cmd Accepted	
				1	Cmd Not Used	
				2	Cmd Index Out of Range	
				3	Cmd Param Out of Range	
				4	Not a Valid Short Command	
				5	Not a Valid Long Command	
				6	Incorrect Checksum	
				7	Cmd Exceeded Mode Index	
				8	Not Accepted in Current mode	
				9	Not Accepted in Seq Execution	
				10	Can't Use Brake w- Az Moving	
				11	Can't Cage Az in Current Pos	
				12	Can't Move Az w- Brake On	
				13	Mode Not Allowed in this Mode	
				14	Pos A Must Be < Pos B	
53242	5	ICSTAT_4	Instrument Cmd Stack Item 4 - Status	15-31	Not Used	B
				0	Spacecraft	
53247	1	ICSRC_4	Instrument Cmd Stack Item 4 - Source	1	Internal Sequence	B
53248	16	ICMAIN_5	Instrument Cmd Stack Item 5 - Main	N/A	N/A	
53264	16	ICPARM_5	Instrument Cmd Stack Item 5 - Parm	N/A	N/A	
53280	10	ICSMPL_5	Instrument Cmd Stack Item 5 - Sample	Counts	N/A	N/A
				0	Cmd Accepted	
				1	Cmd Not Used	
				2	Cmd Index Out of Range	
				3	Cmd Param Out of Range	
				4	Not a Valid Short Command	
				5	Not a Valid Long Command	
				6	Incorrect Checksum	
				7	Cmd Exceeded Mode Index	
				8	Not Accepted in Current mode	
				9	Not Accepted in Seq Execution	
				10	Can't Use Brake w- Az Moving	
				11	Can't Cage Az in Current Pos	
				12	Can't Move Az w- Brake On	
				13	Mode Not Allowed in this Mode	
				14	Pos A Must Be < Pos B	
53290	5	ICSTAT_5	Instrument Cmd Stack Item 5 - Status	15-31	Not Used	B
				0	Spacecraft	
53295	1	ICSRC_5	Instrument Cmd Stack Item 5 - Source	1	Internal Sequence	B
53296	16	ICMAIN_6	Instrument Cmd Stack Item 6 - Main	N/A	N/A	
53312	16	ICPARM_6	Instrument Cmd Stack Item 6 - Parm	N/A	N/A	
53328	10	ICSMPL_6	Instrument Cmd Stack Item 6 - Sample	Counts	N/A	N/A

Check the JPSS MIS Server at https://jpssmis.gsfc.nasa.gov/frontmenu_dsp.cfm to verify that this is the correct version prior to use.

Start Bit	Bit Size	Mnemonic Name	Description	Units OR State Value	Conversion Coefficients (formula or C5,C4,C3,C2,C1,C0) OR State Name	Data Type
				0	Cmd Accepted	
				1	Cmd Not Used	
				2	Cmd Index Out of Range	
				3	Cmd Param Out of Range	
				4	Not a Valid Short Command	
				5	Not a Valid Long Command	
				6	Incorrect Checksum	
				7	Cmd Exceeded Mode Index	
				8	Not Accepted in Current mode	
				9	Not Accepted in Seq Execution	
				10	Can't Use Brake w- Az Moving	
				11	Can't Cage Az in Current Pos	
				12	Can't Move Az w- Brake On	
				13	Mode Not Allowed in this Mode	
				14	Pos A Must Be < Pos B	
53338	5	ICSTAT_6	Instrument Cmd Stack Item 6 - Status	15-31	Not Used	B
				0	Spacecraft	
53343	1	ICSRC_6	Instrument Cmd Stack Item 6 - Source	1	Internal Sequence	B
53344	16	ICMAIN_7	Instrument Cmd Stack Item 7 - Main	N/A	N/A	
53360	16	ICPARM_7	Instrument Cmd Stack Item 7 - Parm	N/A	N/A	
53376	10	ICSMPL_7	Instrument Cmd Stack Item 7 - Sample	Counts	N/A	N/A
				0	Cmd Accepted	
				1	Cmd Not Used	
				2	Cmd Index Out of Range	
				3	Cmd Param Out of Range	
				4	Not a Valid Short Command	
				5	Not a Valid Long Command	
				6	Incorrect Checksum	
				7	Cmd Exceeded Mode Index	
				8	Not Accepted in Current mode	
				9	Not Accepted in Seq Execution	
				10	Can't Use Brake w- Az Moving	
				11	Can't Cage Az in Current Pos	
				12	Can't Move Az w- Brake On	
				13	Mode Not Allowed in this Mode	
				14	Pos A Must Be < Pos B	
53386	5	ICSTAT_7	Instrument Cmd Stack Item 7 - Status	15-31	Not Used	B
				0	Spacecraft	
53391	1	ICSRC_7	Instrument Cmd Stack Item 7 - Source	1	Internal Sequence	B
53392	16	ERRCOUNT	Instrument Error Counter	Counts	N/A	N/A
53408	10	ERSMPL_0	Instrument Error Stack Item 0 - Sample	Counts	N/A	N/A

Check the JPSS MIS Server at https://jpssmis.gsfc.nasa.gov/frontmenu_dsp.cfm to verify that this is the correct version prior to use.

Start Bit	Bit Size	Mnemonic Name	Description	Units OR State Value	Conversion Coefficients (formula or C5,C4,C3,C2,C1,C0) OR State Name	Data Type
				0	No Error	
				1	Unexpected Interrupt	
				2	Illegal Intern'l Seq Control Value	
				3	Process Short Cmd Illegal Cmd	
				4	Process Long Cmd Illegal Cmd	
				5	Check Illegal Cmd	
				6	Rcvd 1553 Msg With an Error	
				7	Incorrect Init DMA Sync	
				8	Illegal Pack Data Indicat'r Val	
				9	Int Seq Index Limit Exceeded	
				10	Failed At Least 1 DMA Com	
				11	Illegal Hskpg Destination Size	
				12	Spurious DAP Clk Interrupt	
				13	Spurious ICP Clk Interrupt	
				14	ICA Got To DMA Transfer Late	
				15-19	Not Used	
				20	Potent Fail Brake Pos Sensor	
				21	Potent Fail Cover Pos Sensor	
				22	Main Cvr Lag Exceeded	
				23	Science Pkt Xfer Lockup Det	
				24	DAA & ICA Samp # No Match	
				25	DAA Reset bec Cont Com Fail	
				26	Science Packet Transfer OK	
				27-62	Not Used	
53418	6	ERTYPE_0	Instrument Error Stack Item 0 - Type	63	Undefined Error	B
53424	10	ERSMPL_1	Instrument Error Stack Item 1 - Sample	Counts	N/A	N/A
				0	No Error	
				1	Unexpected Interrupt	
				2	Illegal Intern'l Seq Control Value	
				3	Process Short Cmd Illegal Cmd	
				4	Process Long Cmd Illegal Cmd	
				5	Check Illegal Cmd	
				6	Rcvd 1553 Msg With an Error	
				7	Incorrect Init DMA Sync	
				8	Illegal Pack Data Indicat'r Val	
				9	Int Seq Index Limit Exceeded	
				10	Failed At Least 1 DMA Com	
				11	Illegal Hskpg Destination Size	
				12	Spurious DAP Clk Interrupt	
				13	Spurious ICP Clk Interrupt	
				14	ICA Got To DMA Transfer Late	
				15-19	Not Used	
				20	Potent Fail Brake Pos Sensor	
				21	Potent Fail Cover Pos Sensor	
				22	Main Cvr Lag Exceeded	
				23	Science Pkt Xfer Lockup Det	
				24	DAA & ICA Samp # No Match	
				25	DAA Reset bec Cont Com Fail	
				26	Science Packet Transfer OK	
				27-62	Not Used	
53434	6	ERTYPE_1	Instrument Error Stack Item 1 - Type	63	Undefined Error	B
53440	10	ERSMPL_2	Instrument Error Stack Item 2 - Sample	Counts	N/A	N/A

Check the JPSS MIS Server at https://jpssmis.gsfc.nasa.gov/frontmenu_dsp.cfm to verify that this is the correct version prior to use.

Start Bit	Bit Size	Mnemonic Name	Description	Units OR State Value	Conversion Coefficients (formula or C5,C4,C3,C2,C1,C0) OR State Name	Data Type
				0	No Error	
				1	Unexpected Interrupt	
				2	Illegal Intern'l Seq Control Value	
				3	Process Short Cmd Illegal Cmd	
				4	Process Long Cmd Illegal Cmd	
				5	Check Illegal Cmd	
				6	Rcvd 1553 Msg With an Error	
				7	Incorrect Init DMA Sync	
				8	Illegal Pack Data Indicat'r Val	
				9	Int Seq Index Limit Exceeded	
				10	Failed At Least 1 DMA Com	
				11	Illegal Hskpg Destination Size	
				12	Spurious DAP Clk Interrupt	
				13	Spurious ICP Clk Interrupt	
				14	ICA Got To DMA Transfer Late	
				15-19	Not Used	
				20	Potent Fail Brake Pos Sensor	
				21	Potent Fail Cover Pos Sensor	
				22	Main Cvr Lag Exceeded	
				23	Science Pkt Xfer Lockup Det	
				24	DAA & ICA Samp # No Match	
				25	DAA Reset bec Cont Com Fail	
				26	Science Packet Transfer OK	
				27-62	Not Used	
53450	6	ERTYPE_2	Instrument Error Stack Item 2 - Type	63	Undefined Error	B
53456	10	ERSMPL_3	Instrument Error Stack Item 3 - Sample	Counts	N/A	N/A
				0	No Error	
				1	Unexpected Interrupt	
				2	Illegal Intern'l Seq Control Value	
				3	Process Short Cmd Illegal Cmd	
				4	Process Long Cmd Illegal Cmd	
				5	Check Illegal Cmd	
				6	Rcvd 1553 Msg With an Error	
				7	Incorrect Init DMA Sync	
				8	Illegal Pack Data Indicat'r Val	
				9	Int Seq Index Limit Exceeded	
				10	Failed At Least 1 DMA Com	
				11	Illegal Hskpg Destination Size	
				12	Spurious DAP Clk Interrupt	
				13	Spurious ICP Clk Interrupt	
				14	ICA Got To DMA Transfer Late	
				15-19	Not Used	
				20	Potent Fail Brake Pos Sensor	
				21	Potent Fail Cover Pos Sensor	
				22	Main Cvr Lag Exceeded	
				23	Science Pkt Xfer Lockup Det	
				24	DAA & ICA Samp # No Match	
				25	DAA Reset bec Cont Com Fail	
				26	Science Packet Transfer OK	
				27-62	Not Used	
53466	6	ERTYPE_3	Instrument Error Stack Item 3 - Type	63	Undefined Error	B
53472	10	ERSMPL_4	Instrument Error Stack Item 4 - Sample	Counts	N/A	N/A

Check the JPSS MIS Server at https://jpssmis.gsfc.nasa.gov/frontmenu_dsp.cfm to verify that this is the correct version prior to use.

Start Bit	Bit Size	Mnemonic Name	Description	Units OR State Value	Conversion Coefficients (formula or C5,C4,C3,C2,C1,C0) OR State Name	Data Type
				0	No Error	
				1	Unexpected Interrupt	
				2	Illegal Intern'l Seq Control Value	
				3	Process Short Cmd Illegal Cmd	
				4	Process Long Cmd Illegal Cmd	
				5	Check Illegal Cmd	
				6	Rcvd 1553 Msg With an Error	
				7	Incorrect Init DMA Sync	
				8	Illegal Pack Data Indicat'r Val	
				9	Int Seq Index Limit Exceeded	
				10	Failed At Least 1 DMA Com	
				11	Illegal Hskpg Destination Size	
				12	Spurious DAP Clk Interrupt	
				13	Spurious ICP Clk Interrupt	
				14	ICA Got To DMA Transfer Late	
				15-19	Not Used	
				20	Potent Fail Brake Pos Sensor	
				21	Potent Fail Cover Pos Sensor	
				22	Main Cvr Lag Exceeded	
				23	Science Pkt Xfer Lockup Det	
				24	DAA & ICA Samp # No Match	
				25	DAA Reset bec Cont Com Fail	
				26	Science Packet Transfer OK	
				27-62	Not Used	
53482	6	ERTYPE_4	Instrument Error Stack Item 4 - Type	63	Undefined Error	B
53488	10	ERSMPL_5	Instrument Error Stack Item 5 - Sample	Counts	N/A	N/A
				0	No Error	
				1	Unexpected Interrupt	
				2	Illegal Intern'l Seq Control Value	
				3	Process Short Cmd Illegal Cmd	
				4	Process Long Cmd Illegal Cmd	
				5	Check Illegal Cmd	
				6	Rcvd 1553 Msg With an Error	
				7	Incorrect Init DMA Sync	
				8	Illegal Pack Data Indicat'r Val	
				9	Int Seq Index Limit Exceeded	
				10	Failed At Least 1 DMA Com	
				11	Illegal Hskpg Destination Size	
				12	Spurious DAP Clk Interrupt	
				13	Spurious ICP Clk Interrupt	
				14	ICA Got To DMA Transfer Late	
				15-19	Not Used	
				20	Potent Fail Brake Pos Sensor	
				21	Potent Fail Cover Pos Sensor	
				22	Main Cvr Lag Exceeded	
				23	Science Pkt Xfer Lockup Det	
				24	DAA & ICA Samp # No Match	
				25	DAA Reset bec Cont Com Fail	
				26	Science Packet Transfer OK	
				27-62	Not Used	
53498	6	ERTYPE_5	Instrument Error Stack Item 5 - Type	63	Undefined Error	B
53504	10	ERSMPL_6	Instrument Error Stack Item 6 - Sample	Counts	N/A	N/A

Check the JPSS MIS Server at https://jpssmis.gsfc.nasa.gov/frontmenu_dsp.cfm to verify that this is the correct version prior to use.

Start Bit	Bit Size	Mnemonic Name	Description	Units OR State Value	Conversion Coefficients (formula or C5,C4,C3,C2,C1,C0) OR State Name	Data Type
				0	No Error	
				1	Unexpected Interrupt	
				2	Illegal Intern'l Seq Control Value	
				3	Process Short Cmd Illegal Cmd	
				4	Process Long Cmd Illegal Cmd	
				5	Check Illegal Cmd	
				6	Rcvd 1553 Msg With an Error	
				7	Incorrect Init DMA Sync	
				8	Illegal Pack Data Indicat'r Val	
				9	Int Seq Index Limit Exceeded	
				10	Failed At Least 1 DMA Com	
				11	Illegal Hskpg Destination Size	
				12	Spurious DAP Clk Interrupt	
				13	Spurious ICP Clk Interrupt	
				14	ICA Got To DMA Transfer Late	
				15-19	Not Used	
				20	Potent Fail Brake Pos Sensor	
				21	Potent Fail Cover Pos Sensor	
				22	Main Cvr Lag Exceeded	
				23	Science Pkt Xfer Lockup Det	
				24	DAA & ICA Samp # No Match	
				25	DAA Reset bec Cont Com Fail	
				26	Science Packet Transfer OK	
				27-62	Not Used	
53514	6	ERTYPE_6	Instrument Error Stack Item 6 - Type	63	Undefined Error	B
53520	10	ERSMPL_7	Instrument Error Stack Item 7 - Sample	Counts	N/A	N/A
				0	No Error	
				1	Unexpected Interrupt	
				2	Illegal Intern'l Seq Control Value	
				3	Process Short Cmd Illegal Cmd	
				4	Process Long Cmd Illegal Cmd	
				5	Check Illegal Cmd	
				6	Rcvd 1553 Msg With an Error	
				7	Incorrect Init DMA Sync	
				8	Illegal Pack Data Indicat'r Val	
				9	Int Seq Index Limit Exceeded	
				10	Failed At Least 1 DMA Com	
				11	Illegal Hskpg Destination Size	
				12	Spurious DAP Clk Interrupt	
				13	Spurious ICP Clk Interrupt	
				14	ICA Got To DMA Transfer Late	
				15-19	Not Used	
				20	Potent Fail Brake Pos Sensor	
				21	Potent Fail Cover Pos Sensor	
				22	Main Cvr Lag Exceeded	
				23	Science Pkt Xfer Lockup Det	
				24	DAA & ICA Samp # No Match	
				25	DAA Reset bec Cont Com Fail	
				26	Science Packet Transfer OK	
				27-62	Not Used	
53530	6	ERTYPE_7	Instrument Error Stack Item 7 - Type	63	Undefined Error	B
53536	80	N/A	Spare	N/A	N/A	N/A

Check the JPSS MIS Server at https://jpssmis.gsfc.nasa.gov/frontmenu_dsp.cfm to verify that this is the correct version prior to use.

Start Bit	Bit Size	Mnemonic Name	Description	Units OR State Value	Conversion Coefficients (formula or C5,C4,C3,C2,C1,C0) OR State Name	Data Type
53616	3	TBRDGCS	Total Bridge Bal. Control Status	0 1 2 3-7	Bridge Balance Off Bridge Balance Maintenance Bridge Balance Reset Not Used	B
53619	1	TBRDGDVS	Total Bridge Bal. DAC Update Status	0 1	DAC Value Unchanged DAC Value Updated	B
53620	5	TOTBRST	Total Bridge Bal. Reset Calculation Counter	Counts		N/A
53625	7	N/A	Spare	N/A	N/A	N/A
53632	12	TOTBSLA	Total Space Look Average	Counts		N/A
53644	4	N/A	Spare	N/A	N/A	N/A
53648	12	TBBDACC	Total Bridge Bal. Coarse DAC Value	Counts		N/A
53660	4	N/A	Spare	N/A	N/A	N/A
53664	12	TBBDACF	Total Bridge Bal. Fine DAC Value	Counts		N/A
53676	4	N/A	Spare	N/A	N/A	N/A
53680	3	SBRDGCS	SW Bridge Bal. Control Status	0 1 2 3-7	Bridge Balance Off Bridge Balance Maintenance Bridge Balance Reset Not Used	B
53683	1	SBRDGDVS	SW Bridge Bal. DAC Update Status	0 1	DAC Value Unchanged DAC Value Updated	B
53684	5	SWBRST	SW Bridge Bal. Reset Calculation Counter	Counts		N/A
53689	7	N/A	Spare	N/A	N/A	N/A
53696	12	SWBSLA	SW Space Look Average	Counts		N/A
53708	4	N/A	Spare	N/A	N/A	N/A
53712	12	SWBBDACC	SW Bridge Bal. Coarse DAC Value	Counts		N/A
53724	4	N/A	Spare	N/A	N/A	N/A
53728	12	SWBBDACF	SW Bridge Bal. Fine DAC Value	Counts		N/A
53740	4	N/A	Spare	N/A	N/A	N/A
53744	3	LBRDGCS	LW Bridge Bal. Control Status	0 1 2 3-7	Bridge Balance Off Bridge Balance Maintenance Bridge Balance Reset Not Used	B
53747	1	LBRDGDVS	LW Bridge Bal. DAC Update Status	0 1	DAC Value Unchanged DAC Value Updated	B
53748	5	LWBRST	LW Bridge Bal. Reset Calculation Counter	Counts		N/A
53753	7	N/A	Spare	N/A	N/A	N/A
53760	12	LWBSLA	LW Space Look Average	Counts		N/A
53772	4	N/A	Spare	N/A	N/A	N/A
53776	12	LWBBDACC	LW Bridge Bal. Coarse DAC Value	Counts		N/A
53788	4	N/A	Spare	N/A	N/A	N/A
53792	12	LWBBDACF	LW Bridge Bal. Fine DAC Value	Counts		N/A
53804	4	N/A	Spare	N/A	N/A	N/A
53808	10	BRDGSLS	Bridge Bal. Space Look Start	Sample		N/A
53818	6	N/A	Spare	N/A	N/A	N/A
53824	10	BRDGSLE	Bridge Bal. Space Look End	Sample		N/A
53834	6	N/A	Spare	N/A	N/A	N/A
53840	10	BRDGUSN	Bridge Bal. DAC Update Sample Number	Sample		N/A
53850	6	N/A	Spare	N/A	N/A	N/A
53856	12	BRDGWINH	Bridge Bal. Window High	Counts		N/A
53868	4	N/A	Spare	N/A	N/A	N/A
53872	12	BRDGWINL	Bridge Bal. Window Low	Counts		N/A
53884	4	N/A	Spare	N/A	N/A	N/A
53888	12	BRDGWINS	Bridge Bal. Window Set Point	Counts		N/A
53900	4	N/A	Spare	N/A	N/A	N/A
53904	12	TSTPTT	Total Detector Temp. Setpoint	Counts		N/A

Check the JPSS MIS Server at https://jpssmis.gsfc.nasa.gov/frontmenu_dsp.cfm to verify that this is the correct version prior to use.

Start Bit	Bit Size	Mnemonic Name	Description	Units OR State Value	Conversion Coefficients (formula or C5,C4,C3,C2,C1,C0) OR State Name	Data Type
				0	Temperature Control Off	
53916	1	TOTTCTRL	Total Detector Temp. Control Status	1	Temperature Control On	B
53917	3	N/A	Spare	N/A	N/A	N/A
53920	12	SWSTPTT	SW Detector Temp. Setpoint	Counts		N/A
				0	Temperature Control Off	
53932	1	SWTCTRL	SW Detector Temp. Control Status	1	Temperature Control On	B
53933	3	N/A	Spare	N/A	N/A	N/A
53936	12	LWSTPTT	LW Detector Temp. Setpoint	Counts		N/A
				0	Temperature Control Off	
53948	1	LWTCTRL	LW Detector Temp. Control Status	1	Temperature Control On	B
53949	3	N/A	Spare	N/A	N/A	N/A
53952	12	BBSETT	Blackbody Temp. Setpoint	Counts		N/A
				0	Temperature Control Off	
53964	1	BBCTRL	Blackbody Temp. Control	1	Temperature Control On	B
53965	3	N/A	Spare	N/A	N/A	N/A
				0	SWICS Lamp Off	
				1	SWICS Lamp @ Level 1	
				2	SWICS Lamp @ Level 2	
53968	2	SWICSI	SWICS Intensity Level	3	SWICS Lamp @ Level 3	B
53970	30	N/A	Spare	N/A	N/A	N/A
				0	Stow	
				1	Normal Earth Scan	
				2	Short Earth Scan	
				3	MAM Scan	
				4	Nadir Scan	
				5	Noise Test 1	
				6	Noise Test 2	
				7	Cal Mode 5	
				8	Cal Mode 6A	
				9	Cal Mode 6B	
				10	Cal Mode 7	
				11	Cal Mode 8A	
				12	Cal Mode 8B	
				13	Cal Mode 11	
				14	Cal Mode 12	
				15	Cal Mode 14	
54000	5	ELSCAN	Elevation Scan Mode	16-31	Not Available	B
				0	Stow	
				1	Normal Earth Scan	
				2	Short Earth Scan	
				3	MAM Scan	
				4	Nadir Scan	
				5	Noise Test 1	
				6	Noise Test 2	
				7	Cal Mode 5	
				8	Cal Mode 6A	
				9	Cal Mode 6B	
				10	Cal Mode 7	
				11	Cal Mode 8A	
				12	Cal Mode 8B	
				13	Cal Mode 11	
				14	Cal Mode 12	
				15	Cal Mode 14	
54005	5	DECKELEV	Elevation On-Deck Scan Mode	16-31	Not Available	B

Check the JPSS MIS Server at https://jpssmis.gsfc.nasa.gov/frontmenu_dsp.cfm to verify that this is the correct version prior to use.

Start Bit	Bit Size	Mnemonic Name	Description	Units OR State Value	Conversion Coefficients (formula or C5,C4,C3,C2,C1,C0) OR State Name	Data Type
				0	Nominal Scan Operation	
				1	Initialization In-Progress	
				2	Elevation @ Initialized Position	
				3	Scan Abort In-Progress	
				4	Elevation @ Aborted Position	
54010	3	ELEVSTAT	Elevation Status	5-7	Not Used	B
				0	Drive Disabled	
54013	1	ELMDRV	Elevation Motor Drive Status	1	Drive Enabled	B
				0	Low Encoder LED Intensity	
54014	1	ELEVLED	Elevation Encoder LED Level	1	High Encoder LED Intensity	B
				0	Gimbal Not Stalled	
54015	1	ELSTALL	Elevation Stall Indicator	1	Gimbal Stalled	B
54016	16	ELPOFFC	Elevation Offset Correction	deg		N/A
54032	16	ELSTERR	Elevation Stall Error Threshold	Counts		N/A
54048	10	ELSTCNT	Elevation Stall Count Threshold	Counts		N/A
54058	6	N/A	Spare	N/A	N/A	N/A
54064	16	ELPERR1	Elevation Position Error #1	Counts		N/A
54080	16	ELPERR2	Elevation Position Error #2	Counts		N/A
54096	16	ELPERR3	Elevation Position Error #3	Counts		N/A
				0	Stop	
				1	Open	
				2	Close	
				3	Not Used	
				4	Fixed Step Towards Open	
				5	Fixed Step Towards Closed	
54112	4	MAINCCMD	Main Cover Command	6-15	Not Used	B
				0	Cover Stopped	
				1	Cover Opening	
				2	Cover Closing	
				3	Not Used	
				4	Cover Stepping Forward	
				5	Cover Stepping Reverse	
				6-14	Not Used	
54116	4	MAINCOVM	Main Cover Motion Status	15	Cover Start Moving	B
				0	Not @ Opened or Closed	
				1	@ Open	
				2	@ Closed	
				3	Not Used	
				4	Potential Bad Sensor	
54120	4	MAINPSTAT	Main Cover Position Status	5-15	Not Used	B
				0	Cover Sensor 1 Active	
				1	Cover Sensor 2 Active	
54124	2	MAINACTS	Main Cover Active Position Sensor	2-3	Not Used	B
54126	2	N/A	Spare	N/A	N/A	N/A
54128	12	MAINCMDP	Main Cover Commanded Position	Counts		N/A
54140	4	N/A	Spare	N/A	N/A	N/A
54144	8	MAINLAG1	Main Cover Sensor 1 Accumulated Lag	Counts		N/A
54152	8	N/A	Spare	N/A	N/A	N/A
54160	8	MAINLAG2	Main Cover Sensor 2 Accumulated Lag	Counts		N/A
54168	8	N/A	Spare	N/A	N/A	N/A
54176	16	MAINSTEPC	Main Cover Step Count	Counts		N/A
54192	12	MAINCLOS	Main Cover Closed Position Definition	Counts		N/A
54204	4	N/A	Spare	N/A	N/A	N/A
54208	12	MAINOPEN	Main Cover Open Position Definition	Counts		N/A
54220	4	N/A	Spare	N/A	N/A	N/A
54224	12	MAINCMAR	Main Cover Closed Margin Definition	Counts		N/A
54236	4	N/A	Spare	N/A	N/A	N/A

Check the JPSS MIS Server at https://jpssmis.gsfc.nasa.gov/frontmenu_dsp.cfm to verify that this is the correct version prior to use.

Start Bit	Bit Size	Mnemonic Name	Description	Units OR State Value	Conversion Coefficients (formula or C5,C4,C3,C2,C1,C0) OR State Name	Data Type
54240	12	MAINOMAR	Main Cover Open Margin Definition	Counts		N/A
54252	4	N/A	Spare	N/A	N/A	N/A
				0	Stop	
				1	Open	
				2	Close	
				3	Not Used	
				4	Fixed Step Towards Open	
				5	Fixed Step Towards Closed	
54256	4	MAMCCMD	MAM Cover Command	6-15	Not Used	B
				0	Cover Stopped	
				1	Cover Opening	
				2	Cover Closing	
				3	Not Used	
				4	Cover Stepping Forward	
				5	Cover Stepping Reverse	
				6-14	Not Used	
54260	4	MAMCOVM	MAM Cover Motion Status	15	Cover Start Moving	B
				0	Not @ Opened or Closed	
				1	@ Open	
				2	@ Closed	
				3	Not Used	
				4	Potential Bad Sensor	
54264	4	MAMPSTAT	MAM Cover Position Status	5-15	Not Used	B
				0	Cover Sensor 1 Active	
				1	Cover Sensor 2 Active	
54268	2	MAMACTS	MAM Cover Active Position Sensor	2-3	Not Used	B
54270	2	N/A	Spare	N/A	N/A	N/A
54272	12	MAMCMDP	MAM Cover Commanded Position	Counts		N/A
54284	36	N/A	Spare	N/A	N/A	N/A
54320	16	MAMSTEPC	MAM Cover Step Count	Counts		N/A
54336	12	MAMCLOS	MAM Cover Closed Position Definition	Counts		N/A
54348	4	N/A	Spare	N/A	N/A	N/A
54352	12	MAMOPEN	MAM Cover Open Position Definition	Counts		N/A
54364	4	N/A	Spare	N/A	N/A	N/A
54368	12	MAMCMAR	MAM Cover Closed Margin Definition	Counts		N/A
54380	4	N/A	Spare	N/A	N/A	N/A
54384	12	MAMOMAR	MAM Cover Open Margin Definition	Counts		N/A
54396	4	N/A	Spare	N/A	N/A	N/A
				0	Reset Not bec. W/D Timeout	
54400	1	DWDGBOOT	DAP Processor Boot Status	1	Reset bec. Watchdog Timeout	B
				0	Disarm Watchdog Timer	
54401	1	DWDGENBL	DAP Processor Watchdog Enable Status	1	Arm Watchdog Timer	B
				0	PROM Power On	
54402	1	DPROMPWR	DAP Processor PROM Power Status	1	PROM Power Off	B
54403	2	-------	DAP Sample Clock Interrupt Occurred	N/A	N/A	N/A
54405	11	N/A	Spare	N/A	N/A	N/A
54416	16	DSCANPER	DAP Processor Scan Period Count	Counts		N/A
54432	16	DMEMSOFF	DAP Mem Dump Start Address Offset	Offset		N/A
54448	16	DMEMSSEG	DAP Mem Dump Start Address Segment	Segment		N/A
54464	16	DMEMEOFF	DAP Mem Dump End Address Offset	Offset		N/A
54480	16	DMEMESEG	DAP Mem Dump End Address Segment	Segment		N/A
54496	16	DPCKSOFF	DAP Mem Dump Pckt Start Address Offset	Offset		N/A
54512	16	DPCKSSEG	DAP Mem Dump Pckt Start Address Seg.	Segment		N/A
54528	16	-------	DAP Mem Dump Address Changed	N/A	N/A	N/A

Check the JPSS MIS Server at https://jpssmis.gsfc.nasa.gov/frontmenu_dsp.cfm to verify that this is the correct version prior to use.

Start Bit	Bit Size	Mnemonic Name	Description	Units OR State Value	Conversion Coefficients (formula or C5,C4,C3,C2,C1,C0) OR State Name	Data Type
54544	16	DPMINET	DAP Min Execution Time	msec		N/A
54560	11	DPMINESN	DAP Min Execution Sample Number	Counts		N/A
54571	5	N/A	Spare	N/A	N/A	N/A
54576	16	DPMAXET	DAP Max Execution Time	msec		N/A
54592	11	DPMAXESN	DAP Max Execution Sample Number	Counts		N/A
54603	5	N/A	Spare	N/A	N/A	N/A
54608	16	DCODCKSUM	DAP RAM Code Checksum	N/A	N/A	N/A
54624	16	DROMCKSUM	DAP ROM Checksum	N/A	N/A	N/A
54640	80	N/A	Spare	N/A	N/A	N/A
				0	Go to Crosstrack	
				1	Go to Position A	
				2	Go to Position B	
				3	Go to Solar Calibration Angle	
				4	Go to Caged	
				5	Go to Spare Position 1	
				6	Go to Spare Position 2	
				7	Go to Spare Position 3	
				8	Scan A to B Asynchronous	
				9	Scan A to B Synchronous	
				10	Stop Azimuth	
				11-15	Not Used	
54720	5	AZMODE	Azimuth Mode	16-31	Not Available	B
				0	Stopped	
54725	1	AZMOT	Azimuth Motion Status	1	Moving	B
				0	Forward	
54726	1	AZDIR	Azimuth Direction Status	1	Reverse	B
				0	At Go to Position	
				1	At Stopped	
				2	At Initial Position	
				3	At Scan Position	
				4	In Motion	
54727	4	AZPOSSTAT	Azimuth Position Status	5-15	Not Used	B
				0	Drive Disabled	
54731	1	AZMDRV	Azimuth Motor Drive Status	1	Drive Enabled	B
				0	Low Encoder LED Intensity	
54732	1	AZLED	Azimuth Encoder LED Level	1	High Encoder LED Intensity	B
				0	Gimbal Not Stalled	
54733	1	AZSTALL	Azimuth Stall Indicator	1	Gimbal Stalled	B
54734	2	N/A	Spare	N/A	N/A	N/A
54736	16	AZFIX0	Crosstrack Position Definition	deg		N/A
54752	16	AZFIX1	Position A Definition	deg		N/A
54768	16	AZFIX2	Position B Definition	deg		N/A
54784	16	AZFIX3	Solar Cal. Position Definition	deg		N/A
54800	16	AZFIX4	Az Cage Position Definition	deg		N/A
54816	16	AZFIX5	Spare Az Position Definition #1	deg		N/A
54832	16	AZFIX6	Spare Az Position Definition #2	deg		N/A
54848	16	AZFIX7	Spare Az Position Definition #3	deg		N/A
54864	16	AZRATE0	Normal (GOTO) AZ Rate Definition	deg/sec		N/A
54880	16	AZRATE1	Unsync AZ Scan Rate Definition	deg/sec		N/A
54896	16	AZRATE2	Sync AZ Scan Rate Definition	deg/sec		N/A
54912	16	AZCORR	Azimuth Offset Correction	deg		N/A
54928	16	AZSTERR	Azimuth Stall Error Threshold	Counts		N/A
54944	10	AZSTCNT	Azimuth Stall Count Threshold	Counts		N/A
54954	6	N/A	Spare	N/A	N/A	N/A

Check the JPSS MIS Server at https://jpssmis.gsfc.nasa.gov/frontmenu_dsp.cfm to verify that this is the correct version prior to use.

Start Bit	Bit Size	Mnemonic Name	Description	Units OR State Value	Conversion Coefficients (formula or C5,C4,C3,C2,C1,C0) OR State Name	Data Type
				0	Stop	
				1	Cage	
				2	Apply	
				3	Release	
				4	Fixed Step Towards Cage	
				5	Fixed Step Towards Applied	
54960	4	BRAKECMD	Brake Command Status	6-15	Not Used	B
				0	Stopped	
				1	Caging	
				2	Applying	
				3	Releasing	
				4	Forward Stepping	
				5	Reverse Stepping	
				6-14	Not Used	
54964	4	BRAKEMOT	Brake Motion Status	15	Start Moving	B
				0	Not @ Relessd, Appld or Caged	
				1	@ Caged	
				2	@ Applied	
				3	@ Released	
				4	Potential Bad Position Sensor	
54968	4	BRAKEPOS	Brake Position Status	5-15	Not Used	B
54972	4	N/A	Spare	N/A	N/A	N/A
54976	12	BRKCMDPS	Brake Commanded Position	Counts		N/A
54988	4	N/A	Spare	N/A	N/A	N/A
54992	12	BRKCURPS	Brake Current Position	Counts		N/A
55004	4	N/A	Spare	N/A	N/A	N/A
55008	8	BRKPSMUX	Brake Position Submux Channel	N/A	N/A	N/A
55016	8	N/A	Spare	N/A	N/A	N/A
55024	16	BRKSCNT	Brake Step Count	Counts		N/A
55040	12	BRKRELEA	Brake Released Position Definition	Counts		N/A
55052	4	N/A	Spare	N/A	N/A	N/A
55056	12	BRKAPPLY	Brake Applied Position Definition	Counts		N/A
55068	4	N/A	Spare	N/A	N/A	N/A
55072	12	BRKCAGED	Brake Caged Position Definition	Counts		N/A
55084	4	N/A	Spare	N/A	N/A	N/A
55088	12	BRKRMAR	Brake Released Margin	Counts		N/A
55100	4	N/A	Spare	N/A	N/A	N/A
55104	12	BRKAMAR	Brake Applied Margin	Counts		N/A
55116	4	N/A	Spare	N/A	N/A	N/A
55120	12	BRKCMAR	Brake Caged Margin	Counts		N/A
55132	4	N/A	Spare	N/A	N/A	N/A
55136	16	AZPERR	Azimuth Position Error	Counts		N/A
55152	5	N/A	Spare	N/A	N/A	N/A
				0	Bus A Selected	
55157	1	TMFBUS	Time Mark & Frequency Bus Select	1	Bus B Selected	B
				0	No Time Mark & Freq Interrupt	
55158	1	TMFINT	Time Mark & Frequency Interrupt	1	TM & Freq Interrupt Occurred	B
55159	9	N/A	Spare	N/A	N/A	N/A

Check the JPSS MIS Server at https://jpssmis.gsfc.nasa.gov/frontmenu_dsp.cfm to verify that this is the correct version prior to use.

Start Bit	Bit Size	Mnemonic Name	Description	Units OR State Value	Conversion Coefficients (formula or C5,C4,C3,C2,C1,C0) OR State Name	Data Type
55168	1	IWDGBOOT	ICP Processor Boot Status	0 1	Reset Not bec. W/D Timeout Reset bec. Watchdog Timeout	B
55169	1	IWDGENBL	ICP Processor Watchdog Enable Status	0 1	Disarm Watchdog Timer Arm Watchdog Timer	B
55170	1	IPROMPWR	ICP Processor PROM Power Status	0 1	PROM Power On PROM Power Off	B
55171	2	-------	ICP Sample Clock Interrupt Occurred	N/A	N/A	N/A
55173	3	COMMSTAT	DMA Communication Status	0 1 2 3 4-7	DMA Communication OK DMA Transmit Timed Out DMA Receive Timed Out Sample Numbers Out of Sync Not Used (TRMM only)	B
55176	8	N/A	Spare	N/A	N/A	N/A
55184	16	ISCANPER	ICP Processor Scan Period Count	Counts		N/A
55200	16	IMEMSOFF	ICP Mem Dump Start Address Offset	Offset		N/A
55216	16	IMEMSSEG	ICP Mem Dump Start Address Segment	Segment		N/A
55232	16	IMEMEOFF	ICP Mem Dump End Address Offset	Offset		N/A
55248	16	IMEMESEG	ICP Mem Dump End Address Segment	Segment		N/A
55264	16	IPCKSOFF	ICP Mem Dump Pckt Start Address Offset	Offset		N/A
55280	16	IPCKSSEG	ICP Mem Dump Pckt Start Address Seg.	Segment		N/A
55296	16	-------	ICP Mem Dump Address Changed	N/A	N/A	N/A
55312	16	IPMINET	ICP Min Execution Time	msec		N/A
55328	11	IPMINESN	ICP Min Execution Sample Number	Counts		N/A
55339	5	N/A	Spare	N/A	N/A	N/A
55344	16	IPMAXET	ICP Max Execution Time	msec		N/A
55360	11	IPMAXESN	ICP Max Execution Sample Number	Counts		N/A
55371	5	N/A	Spare	N/A	N/A	N/A
55376	16	ICODCKSUM	ICP RAM Code Checksum	N/A	N/A	N/A
55392	16	IROMCKSUM	ICP ROM Checksum	N/A	N/A	N/A
55408	80	N/A	Spare	N/A	N/A	N/A
55488	1	SPS1STAT	SPS 1 Sun Presence State	0 1	Sun is Not Present Sun is Present	B
55489	1	SPS2STAT	SPS 2 Sun Presence State	0 1	Sun is Not Present Sun is Present	B
55490	1	SPS1RESP	SPS 1 Sun Presence Response	0 1	Solar Pres Response Disabled Solar Pres Response Enabled	B
55491	1	SPS2RESP	SPS 2 Sun Presence Response	0 1	Solar Pres Response Disabled Solar Pres Response Enabled	B
55492	2	SOLWARN	Solar Warning Status	0 1 2-3	Solar Warning Not Issued Solar Warning Issued Unused	B
55494	1	STOUTRSP	Scan Timeout Response	0 1	Scan T/O Response Disabled Scan T/O Response Enabled	B
55495	2	STOUTAC	Scan Timeout Actively Counting	0 1 2-3	Scan T/O Not Actively Counting Scan T/O Actively Counting Unused	B
55497	2	STOUTOCC	Scan Timeout Occurred	0 1 2-3	No Scan Timeout Scan Timeout Occurred Unused	B
55499	5	N/A	Spare	N/A	N/A	N/A
55504	16	SWRNSMPL	Solar Warning Event Sample	Counts		N/A
55520	16	SWRNSCAN	Solar Warning Event Scan Period	Counts		N/A
55536	16	STOUTSCN	Scan Timeout Scan Period	Counts		N/A

Check the JPSS MIS Server at https://jpssmis.gsfc.nasa.gov/frontmenu_dsp.cfm to verify that this is the correct version prior to use.

Start Bit	Bit Size	Mnemonic Name	Description	Units OR State Value	Conversion Coefficients (formula or C5,C4,C3,C2,C1,C0) OR State Name	Data Type
55552	12	SPSS1	SPS 1 Narrow (Signal) Output	Counts		N/A
55564	4	N/A	Spare	N/A	N/A	N/A
55568	12	SPST1	SPS 1 Wide (Threshold) Output	Counts		N/A
55580	4	N/A	Spare	N/A	N/A	N/A
55584	12	SPS1TNOI	SPS 1 Noise Threshold	Counts		N/A
55596	4	N/A	Spare	N/A	N/A	N/A
55600	6	SPS1TNUM	SPS 1 Ratio Threshold	Counts		N/A
55606	10	N/A	Spare	N/A	N/A	N/A
55616	1	SPS1DETS	SPS 1 Solar Detection State	0 1	Sun Not Detected Sun Detected	B
55617	15	N/A	Spare	N/A	N/A	N/A
55632	10	SPS1DETC	SPS 1 Detection Count	Counts		N/A
55642	6	N/A	Spare	N/A	N/A	N/A
55648	10	SPS1CNTT	SPS 1 Count Threshold	Counts		N/A
55658	6	N/A	Spare	N/A	N/A	N/A
55664	10	SPS1MAXC	SPS 1 Max Det Count During Scan	Counts		N/A
55674	6	N/A	Spare	N/A	N/A	N/A
55680	12	SPSS2	SPS 2 Narrow (Signal) Output	Counts		N/A
55692	4	N/A	Spare	N/A	N/A	N/A
55696	12	SPST2	SPS 2 Wide (Threshold) Output	Counts		N/A
55708	4	N/A	Spare	N/A	N/A	N/A
55712	12	SPS2TNOI	SPS 2 Noise Threshold	Counts		N/A
55724	4	N/A	Spare	N/A	N/A	N/A
55728	6	SPS2TNUM	SPS 2 Ratio Threshold	Counts		N/A
55734	10	N/A	Spare	N/A	N/A	N/A
55744	1	SPS2DETS	SPS 2 Solar Detection State	0 1	Sun Not Detected Sun Detected	B
55745	15	N/A	Spare	N/A	N/A	N/A
55760	10	SPS2DETC	SPS 2 Detection Count	Counts		N/A
55770	6	N/A	Spare	N/A	N/A	N/A
55776	10	SPS2CNTT	SPS 2 Count Threshold	Counts		N/A
55786	6	N/A	Spare	N/A	N/A	N/A
55792	10	SPS2MAXC	SPS 2 Max Det Count During Scan	Counts		N/A
55802	6	N/A	Spare	N/A	N/A	N/A
55808	10	SCNTINIT	Scan Count Initial	Counts		N/A
55818	6	N/A	Spare	N/A	N/A	N/A
55824	10	SCNTCRNT	Scan Count Current	Counts		N/A
55834	6	N/A	Spare	N/A	N/A	N/A

Check the JPSS MIS Server at https://jpssmis.gsfc.nasa.gov/frontmenu_dsp.cfm to verify that this is the correct version prior to use.

Table 4.5-4. CERES Engineering Data Samples

Start Bit	Bit Size	Mnemonic Name	Description	Units OR State Value	Conversion Coefficients (formula or C5,C4,C3,C2,C1,C0) OR State Name	Data Type
80	12	SPSS1	Engineering Data -- sample 0, SPS 1 Narrow Output	Counts		N/A
160	12	SPST1	Engineering Data -- sample 1, SPS 1 Wide Output (Threshold)	Counts		N/A
240	12	SPSS2	Engineering Data -- sample 2, SPS 2 Narrow Output	Counts		N/A
320	12	SPST2	Engineering Data -- sample 3, SPS 2 Wide Output (Threshold)	Counts		N/A
400	12	THTOT	Engineering Data -- sample 4, Total Control Temperature	deg C		N/A
480	12	TSTOT	Engineering Data -- sample 5, Total Sensor Temperature Monitor	deg C		N/A
560	12	THSW	Engineering Data -- sample 6, SW Control Temperature	deg C		N/A
640	12	TSSW	Engineering Data -- sample 7, SW Sensor Temperature Monitor	deg C		N/A
720	12	THLW	Engineering Data -- sample 8, LW Control Temperature	deg C		N/A
800	12	TSLW	Engineering Data -- sample 9, LW Sensor Temperature Monitor	deg C		N/A
880	12	ETRQ	Engineering Data -- sample 10, ECA Torque Output	in-oz		N/A
960	12	SPSS1	Engineering Data -- sample 11, SPS 1 Narrow Output	Counts		N/A
1040	12	SPST1	Engineering Data -- sample 12, SPS 1 Wide Output (Threshold)	Counts		N/A
1120	12	SPSS2	Engineering Data -- sample 13, SPS 2 Narrow Output	Counts		N/A
1200	12	SPST2	Engineering Data -- sample 14, SPS 2 Wide Output (Threshold)	Counts		N/A
1280	12	HDACTOT	Engineering Data -- sample 15, Total Heater DAC Value	Counts		N/A
1360	12	HDACSW	Engineering Data -- sample 16, SW Heater DAC Value	Counts		N/A
1440	12	HDACLW	Engineering Data -- sample 17, LW Heater DAC Value	Counts		N/A
1520	12	TBBTOTM	Engineering Data -- sample 18, Total Blackbody Temperature	deg C		N/A
1600	12	TBBLWM	Engineering Data -- sample 19, LW Blackbody Temperature	deg C		N/A
1680	12	HDACBB	Engineering Data -- sample 20, Blackbody Heater DAC Value	Counts		N/A
1760	12	ATRQ	Engineering Data -- sample 21, ACA Torque Output	in-oz		N/A
1840	12	SPSS1	Engineering Data -- sample 22, SPS 1 Narrow Output	Counts		N/A
1920	12	SPST1	Engineering Data -- sample 23, SPS 1 Wide Output (Threshold)	Counts		N/A
2000	12	SPSS2	Engineering Data -- sample 24, SPS 2 Narrow Output	Counts		N/A
2080	12	SPST2	Engineering Data -- sample 25, SPS 2 Wide Output (Threshold)	Counts		N/A
2160	12	MCP1	Engineering Data -- sample 26, Main Cover Position 1	Counts		N/A
2240	12	MCP2	Engineering Data -- sample 27, Main Cover Position 2	Counts		N/A
2320	12	MAMCP	Engineering Data -- sample 28, MAM Cover Position	Counts		N/A
2400	12	TMCM	Engineering Data -- sample 29, Main Cover Motor Temperature	deg C		N/A
2480	12	TSWCS	Engineering Data -- sample 30, SWICS Photodiode Temperature	deg C		N/A
2560	12	SWCSMON	Engineering Data -- sample 31, SWICS Photodiode Output	Counts		N/A
2640	12	LAMPC	Engineering Data -- sample 32, SWICS Lamp Current	mA		N/A
2720	12	SPSS1	Engineering Data -- sample 33, SPS 1 Narrow Output	Counts		N/A
2800	12	SPST1	Engineering Data -- sample 34, SPS 1 Wide Output (Threshold)	Counts		N/A
2880	12	SPSS2	Engineering Data -- sample 35, SPS 2 Narrow Output	Counts		N/A
2960	12	SPST2	Engineering Data -- sample 36, SPS 2 Wide Output (Threshold)	Counts		N/A
3040	12	TSMOD	Engineering Data -- sample 37, Sensor Module Temperature	deg C		N/A
3120	12	TESPC	Engineering Data -- sample 38, Elevation Spindle Temp. (Cable Wrap)	deg C		N/A
3200	12	TESPM	Engineering Data -- sample 39, Elevation Spindle Temp. (Motor)	deg C		N/A
3280	12	TELBC	Engineering Data -- sample 40, Elevation Bearing Temp. (Cable Wrap)	deg C		N/A
3360	12	TELBM	Engineering Data -- sample 41, Elevation Bearing Temp. (Motor)	deg C		N/A
3440	12	TECA	Engineering Data -- sample 42, ECA Electronics Temperature	deg C		N/A
3520	12	TERAD	Engineering Data -- sample 43, ECA Radiator Temperature	deg C		N/A
3600	12	SPSS1	Engineering Data -- sample 44, SPS 1 Narrow Output	Counts		N/A
3680	12	SPST1	Engineering Data -- sample 45, SPS 1 Wide Output (Threshold)	Counts		N/A
3760	12	SPSS2	Engineering Data -- sample 46, SPS 2 Narrow Output	Counts		N/A
3840	12	SPST2	Engineering Data -- sample 47, SPS 2 Wide Output (Threshold)	Counts		N/A
3920	12	TSEA	Engineering Data -- sample 48, Sensor Electronics Temperature	deg C		N/A
4000	12	TMAMBT1	Engineering Data -- sample 49, MAM Total Baffle Temperature #1	deg C		N/A
4080	12	TMAMBT2	Engineering Data -- sample 50, MAM Total Baffle Temperature #2	deg C		N/A
4160	12	TMAMT	Engineering Data -- sample 51, MAM Total Assembly Temperature	deg C		N/A
4240	12	TMAMSW	Engineering Data -- sample 52, MAM SW Assembly Temperature	deg C		N/A
4320	12	TAZBU	Engineering Data -- sample 53, Azimuth Upper Bearing Temperature	deg C		N/A
4400	12	****	Engineering Data -- sample 54, unused	N/A	N/A	N/A

Check the JPSS MIS Server at https://jpssmis.gsfc.nasa.gov/frontmenu_dsp.cfm to verify that this is the correct version prior to use.

Start Bit	Bit Size	Mnemonic Name	Description	Units OR State Value	Conversion Coefficients (formula or C5,C4,C3,C2,C1,C0) OR State Name	Data Type
4480	12	SPSS1	Engineering Data -- sample 55, SPS 1 Narrow Output	Counts		N/A
4560	12	SPST1	Engineering Data -- sample 56, SPS 1 Wide Output (Threshold)	Counts		N/A
4640	12	SPSS2	Engineering Data -- sample 57, SPS 2 Narrow Output	Counts		N/A
4720	12	SPST2	Engineering Data -- sample 58, SPS 2 Wide Output (Threshold)	Counts		N/A
4800	12	THTOT	Engineering Data -- sample 59, Total Control Temperature	deg C		N/A
4880	12	TSTOT	Engineering Data -- sample 60, Total Sensor Temperature Monitor	deg C		N/A
4960	12	THSW	Engineering Data -- sample 61, SW Control Temperature	deg C		N/A
5040	12	TSSW	Engineering Data -- sample 62, SW Sensor Temperature Monitor	deg C		N/A
5120	12	THLW	Engineering Data -- sample 63, LW Control Temperature	deg C		N/A
5200	12	TSLW	Engineering Data -- sample 64, LW Sensor Temperature Monitor	deg C		N/A
5280	12	ETRQ	Engineering Data -- sample 65, ECA Torque Output	in-oz		N/A
5360	12	SPSS1	Engineering Data -- sample 66, SPS 1 Narrow Output	Counts		N/A
5440	12	SPST1	Engineering Data -- sample 67, SPS 1 Wide Output (Threshold)	Counts		N/A
5520	12	SPSS2	Engineering Data -- sample 68, SPS 2 Narrow Output	Counts		N/A
5600	12	SPST2	Engineering Data -- sample 69, SPS 2 Wide Output (Threshold)	Counts		N/A
5680	12	HDACTOT	Engineering Data -- sample 70, Total Heater DAC Value	Counts		N/A
5760	12	HDACSW	Engineering Data -- sample 71, SW Heater DAC Value	Counts		N/A
5840	12	HDACLW	Engineering Data -- sample 72, LW Heater DAC Value	Counts		N/A
5920	12	TBBTOTM	Engineering Data -- sample 73, Total Blackbody Temperature	deg C		N/A
6000	12	TBBLWM	Engineering Data -- sample 74, LW Blackbody Temperature	deg C		N/A
6080	12	HDACBB	Engineering Data -- sample 75, Blackbody Heater DAC Value	Counts		N/A
6160	12	ATRQ	Engineering Data -- sample 76, ACA Torque Output	in-oz		N/A
6240	12	SPSS1	Engineering Data -- sample 77, SPS 1 Narrow Output	Counts		N/A
6320	12	SPST1	Engineering Data -- sample 78, SPS 1 Wide Output (Threshold)	Counts		N/A
6400	12	SPSS2	Engineering Data -- sample 79, SPS 2 Narrow Output	Counts		N/A
6480	12	SPST2	Engineering Data -- sample 80, SPS 2 Wide Output (Threshold)	Counts		N/A
6560	12	ECTRKF	Engineering Data -- sample 81, ECA Encoder Clear Track A	Counts		N/A
6640	12	ECTRKC	Engineering Data -- sample 82, ECA Encoder Clear Track B	Counts		N/A
6720	12	TDPRO	Engineering Data -- sample 83, DAA Processor Board Temperature	deg C		N/A
6800	12	****	Engineering Data -- sample 84, unused	N/A	N/A	N/A
6880	12	****	Engineering Data -- sample 85, unused	N/A	N/A	N/A
6960	12	TDADC	Engineering Data -- sample 86, DAA ADC Electronics Temperature	deg C		N/A
7040	12	TDRAD	Engineering Data -- sample 87, DAA Radiator Temperature	deg C		N/A
7120	12	SPSS1	Engineering Data -- sample 88, SPS 1 Narrow Output	Counts		N/A
7200	12	SPST1	Engineering Data -- sample 89, SPS 1 Wide Output (Threshold)	Counts		N/A
7280	12	SPSS2	Engineering Data -- sample 90, SPS 2 Narrow Output	Counts		N/A
7360	12	SPST2	Engineering Data -- sample 91, SPS 2 Wide Output (Threshold)	Counts		N/A
7440	12	+12VDMON	Engineering Data -- sample 92, DAA +12V	Volts		N/A
7520	12	-12VDMON	Engineering Data -- sample 93, DAA -12V	Volts		N/A
7600	12	+15VDMON	Engineering Data -- sample 94, DAA +15V	Volts		N/A
7680	12	-15VDMON	Engineering Data -- sample 95, DAA -15V	Volts		N/A
7760	12	+130MON	Engineering Data -- sample 96, DAA +130V	Volts		N/A
7840	12	-130MON	Engineering Data -- sample 97, DAA -130V	Volts		N/A
7920	12	****	Engineering Data -- sample 98, unused	N/A	N/A	N/A
8000	12	SPSS1	Engineering Data -- sample 99, SPS 1 Narrow Output	Counts		N/A
8080	12	SPST1	Engineering Data -- sample 100, SPS 1 Wide Output (Threshold)	Counts		N/A
8160	12	SPSS2	Engineering Data -- sample 101, SPS 2 Narrow Output	Counts		N/A
8240	12	SPST2	Engineering Data -- sample 102, SPS 2 Wide Output (Threshold)	Counts		N/A
8320	12	+VBMON	Engineering Data -- sample 103, Sensor +120V Bias	Volts		N/A
8400	12	-VBMON	Engineering Data -- sample 104, Sensor -120V Bias	Volts		N/A
8480	12	+5VDMON	Engineering Data -- sample 105, DAA +5	Volts		N/A
8560	12	+10VRMON	Engineering Data -- sample 106, DAA +10V Reference	Volts		N/A
8640	12	-10VRMON	Engineering Data -- sample 107, DAA -10V Reference	Volts		N/A
8720	12	DAAGND1	Engineering Data -- sample 108, DAA Ground #1	Volts		N/A
8800	12	DAAGND2	Engineering Data -- sample 109, DAA Ground #2	Volts		N/A

Check the JPSS MIS Server at https://jpssmis.gsfc.nasa.gov/frontmenu_dsp.cfm to verify that this is the correct version prior to use.

Start Bit	Bit Size	Mnemonic Name	Description	Units OR State Value	Conversion Coefficients (formula or C5,C4,C3,C2,C1,C0) OR State Name	Data Type
8880	12	SPSS1	Engineering Data -- sample 110, SPS 1 Narrow Output	Counts		N/A
8960	12	SPST1	Engineering Data -- sample 111, SPS 1 Wide Output (Threshold)	Counts		N/A
9040	12	SPSS2	Engineering Data -- sample 112, SPS 2 Narrow Output	Counts		N/A
9120	12	SPST2	Engineering Data -- sample 113, SPS 2 Wide Output (Threshold)	Counts		N/A
9200	12	THTOT	Engineering Data -- sample 114, Total Control Temperature	deg C		N/A
9280	12	TSTOT	Engineering Data -- sample 115, Total Sensor Temperature Monitor	deg C		N/A
9360	12	THSW	Engineering Data -- sample 116, SW Control Temperature	deg C		N/A
9440	12	TSSW	Engineering Data -- sample 117, SW Sensor Temperature Monitor	deg C		N/A
9520	12	THLW	Engineering Data -- sample 118, LW Control Temperature	deg C		N/A
9600	12	TSLW	Engineering Data -- sample 119, LW Sensor Temperature Monitor	deg C		N/A
9680	12	ETRQ	Engineering Data -- sample 120, ECA Torque Output	in-oz		N/A
9760	12	SPSS1	Engineering Data -- sample 121, SPS 1 Narrow Output	Counts		N/A
9840	12	SPST1	Engineering Data -- sample 122, SPS 1 Wide Output (Threshold)	Counts		N/A
9920	12	SPSS2	Engineering Data -- sample 123, SPS 2 Narrow Output	Counts		N/A
10000	12	SPST2	Engineering Data -- sample 124, SPS 2 Wide Output (Threshold)	Counts		N/A
10080	12	HDACTOT	Engineering Data -- sample 125, Total Heater DAC Value	Counts		N/A
10160	12	HDACSW	Engineering Data -- sample 126, SW Heater DAC Value	Counts		N/A
10240	12	HDACLW	Engineering Data -- sample 127, LW Heater DAC Value	Counts		N/A
10320	12	TBBTOTM	Engineering Data -- sample 128, Total Blackbody Temperature	deg C		N/A
10400	12	TBBLWM	Engineering Data -- sample 129, LW Blackbody Temperature	deg C		N/A
10480	12	HDACBB	Engineering Data -- sample 130, Blackbody Heater DAC Value	Counts		N/A
10560	12	ATRQ	Engineering Data -- sample 131, ACA Torque Output	in-oz		N/A
10640	12	SPSS1	Engineering Data -- sample 132, SPS 1 Narrow Output	Counts		N/A
10720	12	SPST1	Engineering Data -- sample 133, SPS 1 Wide Output (Threshold)	Counts		N/A
10800	12	SPSS2	Engineering Data -- sample 134, SPS 2 Narrow Output	Counts		N/A
10880	12	SPST2	Engineering Data -- sample 135, SPS 2 Wide Output (Threshold)	Counts		N/A
10960	12	****	Engineering Data -- sample 136, unused	N/A	N/A	N/A
11040	12	****	Engineering Data -- sample 137, unused	N/A	N/A	N/A
11120	12	****	Engineering Data -- sample 138, unused	N/A	N/A	N/A
11200	12	****	Engineering Data -- sample 139, unused	N/A	N/A	N/A
11280	12	****	Engineering Data -- sample 140, unused	N/A	N/A	N/A
11360	12	****	Engineering Data -- sample 141, unused	N/A	N/A	N/A
11440	12	****	Engineering Data -- sample 142, unused	N/A	N/A	N/A
11520	12	SPSS1	Engineering Data -- sample 143, SPS 1 Narrow Output	Counts		N/A
11600	12	SPST1	Engineering Data -- sample 144, SPS 1 Wide Output (Threshold)	Counts		N/A
11680	12	SPSS2	Engineering Data -- sample 145, SPS 2 Narrow Output	Counts		N/A
11760	12	SPST2	Engineering Data -- sample 146, SPS 2 Wide Output (Threshold)	Counts		N/A
11840	12	BRPOS	Engineering Data -- sample 147, Azimuth Caging/Brake Position	Counts		N/A
11920	12	****	Engineering Data -- sample 148, unused	N/A	N/A	N/A
12000	12	TAZBL	Engineering Data -- sample 149, Azimuth Lower Bearing Temperature	deg C		N/A
12080	12	****	Engineering Data -- sample 150, unused	N/A	N/A	N/A
12160	12	TACA	Engineering Data -- sample 151, ACA Electronics Temperature	deg C		N/A
12240	12	ACTRKF	Engineering Data -- sample 152, ACA Encoder Clear Track A	Counts		N/A
12320	12	ACTRKC	Engineering Data -- sample 153, ACA Encoder Clear Track B	Counts		N/A
12400	12	SPSS1	Engineering Data -- sample 154, SPS 1 Narrow Output	Counts		N/A
12480	12	SPST1	Engineering Data -- sample 155, SPS 1 Wide Output (Threshold)	Counts		N/A
12560	12	SPSS2	Engineering Data -- sample 156, SPS 2 Narrow Output	Counts		N/A
12640	12	SPST2	Engineering Data -- sample 157, SPS 2 Wide Output (Threshold)	Counts		N/A
12720	12	****	Engineering Data -- sample 158, unused	N/A	N/A	N/A
12800	12	TIPRO	Engineering Data -- sample 159, ICA Processor Board Temperature	deg C		N/A
12880	12	****	Engineering Data -- sample 160, unused	N/A		N/A
12960	12	TIADC	Engineering Data -- sample 161, ICA ADC Electronics Temperature	deg C		N/A
13040	12	TPCA	Engineering Data -- sample 162, PCA Electronics Temperature	deg C		N/A
13120	12	****	Engineering Data -- sample 163, unused	N/A	N/A	N/A
13200	12	****	Engineering Data -- sample 164, unused	N/A	N/A	N/A

Start Bit	Bit Size	Mnemonic Name	Description	Units OR State Value	Conversion Coefficients (formula or C5,C4,C3,C2,C1,C0) OR State Name	Data Type
8880	12	SPSS1	Engineering Data -- sample 110, SPS 1 Narrow Output	Counts		N/A
8960	12	SPST1	Engineering Data -- sample 111, SPS 1 Wide Output (Threshold)	Counts		N/A
9040	12	SPSS2	Engineering Data -- sample 112, SPS 2 Narrow Output	Counts		N/A
9120	12	SPST2	Engineering Data -- sample 113, SPS 2 Wide Output (Threshold)	Counts		N/A
9200	12	THTOT	Engineering Data -- sample 114, Total Control Temperature	deg C		N/A
9280	12	TSTOT	Engineering Data -- sample 115, Total Sensor Temperature Monitor	deg C		N/A
9360	12	THSW	Engineering Data -- sample 116, SW Control Temperature	deg C		N/A
9440	12	TSSW	Engineering Data -- sample 117, SW Sensor Temperature Monitor	deg C		N/A
9520	12	THLW	Engineering Data -- sample 118, LW Control Temperature	deg C		N/A
9600	12	TSLW	Engineering Data -- sample 119, LW Sensor Temperature Monitor	deg C		N/A
9680	12	ETRQ	Engineering Data -- sample 120, ECA Torque Output	in-oz		N/A
9760	12	SPSS1	Engineering Data -- sample 121, SPS 1 Narrow Output	Counts		N/A
9840	12	SPST1	Engineering Data -- sample 122, SPS 1 Wide Output (Threshold)	Counts		N/A
9920	12	SPSS2	Engineering Data -- sample 123, SPS 2 Narrow Output	Counts		N/A
10000	12	SPST2	Engineering Data -- sample 124, SPS 2 Wide Output (Threshold)	Counts		N/A
10080	12	HDACTOT	Engineering Data -- sample 125, Total Heater DAC Value	Counts		N/A
10160	12	HDACSW	Engineering Data -- sample 126, SW Heater DAC Value	Counts		N/A
10240	12	HDACLW	Engineering Data -- sample 127, LW Heater DAC Value	Counts		N/A
10320	12	TBBTOTM	Engineering Data -- sample 128, Total Blackbody Temperature	deg C		N/A
10400	12	TBBLWM	Engineering Data -- sample 129, LW Blackbody Temperature	deg C		N/A
10480	12	HDACBB	Engineering Data -- sample 130, Blackbody Heater DAC Value	Counts		N/A
10560	12	ATRQ	Engineering Data -- sample 131, ACA Torque Output	in-oz		N/A
10640	12	SPSS1	Engineering Data -- sample 132, SPS 1 Narrow Output	Counts		N/A
10720	12	SPST1	Engineering Data -- sample 133, SPS 1 Wide Output (Threshold)	Counts		N/A
10800	12	SPSS2	Engineering Data -- sample 134, SPS 2 Narrow Output	Counts		N/A
10880	12	SPST2	Engineering Data -- sample 135, SPS 2 Wide Output (Threshold)	Counts		N/A
10960	12	****	Engineering Data -- sample 136, unused	N/A	N/A	N/A
11040	12	****	Engineering Data -- sample 137, unused	N/A	N/A	N/A
11120	12	****	Engineering Data -- sample 138, unused	N/A	N/A	N/A
11200	12	****	Engineering Data -- sample 139, unused	N/A	N/A	N/A
11280	12	****	Engineering Data -- sample 140, unused	N/A	N/A	N/A
11360	12	****	Engineering Data -- sample 141, unused	N/A	N/A	N/A
11440	12	****	Engineering Data -- sample 142, unused	N/A	N/A	N/A
11520	12	SPSS1	Engineering Data -- sample 143, SPS 1 Narrow Output	Counts		N/A
11600	12	SPST1	Engineering Data -- sample 144, SPS 1 Wide Output (Threshold)	Counts		N/A
11680	12	SPSS2	Engineering Data -- sample 145, SPS 2 Narrow Output	Counts		N/A
11760	12	SPST2	Engineering Data -- sample 146, SPS 2 Wide Output (Threshold)	Counts		N/A
11840	12	BRPOS	Engineering Data -- sample 147, Azimuth Caging/Brake Position	Counts		N/A
11920	12	****	Engineering Data -- sample 148, unused	N/A	N/A	N/A
12000	12	TAZBL	Engineering Data -- sample 149, Azimuth Lower Bearing Temperature	deg C		N/A
12080	12	****	Engineering Data -- sample 150, unused	N/A	N/A	N/A
12160	12	TACA	Engineering Data -- sample 151, ACA Electronics Temperature	deg C		N/A
12240	12	ACTRKF	Engineering Data -- sample 152, ACA Encoder Clear Track A	Counts		N/A
12320	12	ACTRKC	Engineering Data -- sample 153, ACA Encoder Clear Track B	Counts		N/A
12400	12	SPSS1	Engineering Data -- sample 154, SPS 1 Narrow Output	Counts		N/A
12480	12	SPST1	Engineering Data -- sample 155, SPS 1 Wide Output (Threshold)	Counts		N/A
12560	12	SPSS2	Engineering Data -- sample 156, SPS 2 Narrow Output	Counts		N/A
12640	12	SPST2	Engineering Data -- sample 157, SPS 2 Wide Output (Threshold)	Counts		N/A
12720	12	****	Engineering Data -- sample 158, unused	N/A	N/A	N/A
12800	12	TIPRO	Engineering Data -- sample 159, ICA Processor Board Temperature	deg C		N/A
12880	12	****	Engineering Data -- sample 160, unused	N/A		N/A
12960	12	TIADC	Engineering Data -- sample 161, ICA ADC Electronics Temperature	deg C		N/A
13040	12	TPCA	Engineering Data -- sample 162, PCA Electronics Temperature	deg C		N/A
13120	12	****	Engineering Data -- sample 163, unused	N/A	N/A	N/A
13200	12	****	Engineering Data -- sample 164, unused	N/A	N/A	N/A

4.5.4.2 Calibration Data

The CERES will generate one calibration data packet (APID 147) every 6.6 second scan cycle if it is in the Solar Calibration Science Mode. The packet format and user data field content is identical to the Science Data packet. Only the APID and the values in the packet identification fields will differ from the Science Data packet. Since the CERES performs a 6.6 second scan, the same engineering, sensor and gimbal fields are repeated 660 times. Table 4.5-3 lists the content of the 6980-byte user data field. Table 4.5-4 lists the repeating engineering data entries. Figure 4.5-7 shows the structure of the CERES Calibration Data packet.

CERES Calibration Data Packet **VERSION Aqua** **DATE: 7/31/2002**

Fixed Packet Length 6994 Octets

	PACKET PRIMARY HEADER							SECONDARY HEADER	User Data Field									
	Verson No.	Packet Identification			Packet Sequence Control (PSC)		Packet Length		CERES Calibration Data									
		Type Indicator	Sec Hdr Flag	APID	Sequence Flags	Sequence Count		Time Data	Packet Identi-fication Data	Main Data, First Record						Main Data, Records 2-660	Instrument Status Data	
										Engr. Data	Shortwave Channel	Longwave Channel	Total Channel	Elevation Position	Azimuth Position			
Bits	3	1	1	11	2	14	16	64	80	12	12	12	12	16	16	52720	2960	TOTAL 55952
Octets	2				2		2	8	10	3		3		2	2	6590	370	6994
Value	000	0	1	93_{16}	11	varies	$1B4B_{16}$	varies	varies	varies	varies	varies	varies	varies	varies	varies	varies	

0 = Telemetry Packet

Secondary Header Present

Standalone Packet

CERES Calibration Data				
CERES Packet Identification Data				
Quick Look Data	Spare	Packet Info	Packet Counter	Spare
8	8	16	16	32
1	1	2	2	4
varies	0	varies	varies	0

Bits 0-3, the Packet Data Indicator (PKTIND), will be equal to 1, indicating a calibration packet.

Figure 4.5-7. CERES Calibration Data Packet Format

4.5.4.3 Diagnostic Data

The CERES generates a diagnostic packet (APID 150) every 6.6 seconds when the packet type is commanded to one of four values indicated in the Science Data Packet Indicator Field – No Archive, Memory Dump, Gimbal, or Execution Time Data. No Archive Data is commanded when CERES enters a safe, Standby/Hold, or Diagnostic mode. Memory dumps, as well as other diagnostic data

collection, are usually done in Science Mode, not in Diagnostic Mode. The packet has the same basic format as the science data packet, except the four diagnostic data types replace the science packet's sensor outputs in each of the 660 samples. The diagnostic data consists of sensor data not intended for science processing, DAP and ICP memory data, azimuth and elevation gimbal error, or DAP and ICP execution time data sets, respectively. The packet begins with identification fields, contains 660 samples of engineering values, the selected diagnostic type, and gimbal positions, and ends with instrument status data.

The CERES Diagnostic Data packet is 6994 bytes in length and has an average data rate of 8477.6 bps. Its structure is shown in Figure 4.5-8. The secondary header, formatted according to Table 4.1-3, contains the timestamp marking the beginning of the CERES scan. The contents of the 6980-byte user data field are shown in Table 4.5-5. Table 4.5-4 has the same engineering fields applicable to the Diagnostic packet as to all the other CERES mission data packets.

CERES Diagnostic Data Packet **VERSION** **Aqua** **DATE:** **7/31/2002**

Fixed Packet Length 6994 Octets

	PACKET PRIMARY HEADER							SECONDARY HEADER	User Data Field								
	Verson No.	Packet Identification			Packet Sequence Control (PSC)		Packet Length		CERES Diagnostic Data								
		Type Indicator	Sec Hdr Flag	APID	Sequence Flags	Sequence Count		Time Data	Packet Identi-fication Data	Main Data, First Record						Main Data, Records 2-660	Instrument Status Data
										Engr. Data	Not Used	DAP Diagnostic Data	ICP Diagnostic Data	Elevation Position	Azimuth Position		
Bits	3	1	1	11	2	14	16	64	80	12	4	16	16	16	16	52720	2960
Octets	2				2		2	8	10	2		2	2	2	2	6590	370
Value	000	0	1	96_{16}	11	varies	$1B4B_{16}$	varies	varies	varies	varies	varies	varies	varies	varies	varies	varies

TOTAL 55952
6994

0 = Telemetry Packet

Secondary Header Present

Standalone Packet

CERES Diagnostic Data				
CERES Packet Identification Data				
Quick Look Flag	Spare	Packet Info	Packet Counter	Spare
8	8	16	16	32
1	1	2	2	4
varies	0	varies	varies	0

Bits 0-3, the Packet Data Indicator (PKTIND), will be equal to
2, indicating a Memory Dump
3, indicating Gimbal Data
4, indicating Execution Time Data
5, indicating No Archive Data

Figure 4.5-8. CERES Diagnostic Packet Format

Table 4.5-5. CERES Diagnostic Packet User Data Fields

Start Bit	Bit Size	Mnemonic Name	Description	Units OR State Value	Conversion Coefficients (formula or C5,C4,C3,C2,C1,C0) OR State Name	Data Type
0	6	N/A	unused	N/A	N/A	N/A
6	1	QLOOKFLG	Quick Look Flag	0 1	Quick Look Flag Not Set Quick Look Flag Set	B
7	1	N/A	unused	N/A	N/A	N/A
8	8	N/A	spare	N/A	N/A	N/A
16	4	PKTIND	Science Packet Data Indicator	0 1 2 3 4 5 6 7-15	Normal Science Data Calibration Data Memory Dump Data Gimbal Data Execution Time Data No Archive Data Fixed Pattern Not Used	B
20	5	PKTVERS	Packet Data Version	N/A	N/A	N/A
25	5	INSTR_ID	Instrument ID Number	0 1 2 3 4 5 6 7-31	FTM PFM FM1 FM2 FM3 FM4 FM5 Not Used	B
30	1	QLOOKFLG	Science Packet Quicklook Flag Status	0 1	Quick Look Flag Not Set Quick Look Flag Set	B
31	1	TIME_ID	Packet Timecode Indicator	0 1	Based on Spacecraft Timing Based on Instrument Timing	B
32	16	PKTCOUNT	Packet Counter	N/A	N/A	N/A
48	32	N/A	spare	N/A	N/A	N/A
80	12	N/A	Engineering Data -- sample 0	N/A	N/A	N/A
92	4	N/A	unused	N/A	N/A	N/A
96	16	N/A	DAP Diagnostic Memory Data -- sample 0	N/A	N/A	N/A
112	16	N/A	ICP Diagnostic Memory Data -- sample 0	N/A	N/A	N/A
128	16	N/A	Elevation Position -- sample 0	N/A	N/A	N/A
144	16	N/A	Azimuth Position -- sample 0	N/A	N/A	N/A
160	12	N/A	Engineering Data -- sample 1	N/A	N/A	N/A
172	4	N/A	unused	N/A	N/A	N/A
176	16	N/A	DAP Diagnostic Memory Data -- sample 1	N/A	N/A	N/A
192	16	N/A	ICP Diagnostic Memory Data -- sample 1	N/A	N/A	N/A
208	16	N/A	Elevation Position -- sample 1	N/A	N/A	N/A
224	16	N/A	Azimuth Position -- sample 1	N/A	N/A	N/A
240	52560	N/A	Samples 2-658	N/A	N/A	N/A
52800	12	N/A	Engineering Data -- sample 659	N/A	N/A	N/A
52812	4	N/A	unused	N/A	N/A	N/A
52816	16	N/A	DAP Diagnostic Memory Data -- sample 659	N/A	N/A	N/A
52832	16	N/A	ICP Diagnostic Memory Data -- sample 659	N/A	N/A	N/A
52848	16	N/A	Elevation Position -- sample 659	N/A	N/A	N/A
52864	16	N/A	Azimuth Position -- sample 659	N/A	N/A	N/A

Start Bit	Bit Size	Mnemonic Name	Description	Units OR State Value	Conversion Coefficients (formula or C5,C4,C3,C2,C1,C0) OR State Name	Data Type
				0	Safe Mode	
				1	Standby Mode	
				2	Crosstrack Mode	
				3	Biaxial Mode	
				4	Solar Calibration Mode	
				5	Diagnostic Configuration Mode	
				6	Internal Calibration Mode	
				7	Special Short Scan Mode	
				8	Contamination Safte Mode	
				9	Hold Mode	
				10	Abbrev'd Internal Cal Mode	
				11	Internal Sequence 11 (Unused)	
				12	Internal Sequence 12 (Unused)	
				13	Internal Sequence 13 (Unused)	
				14	Internal Sequence 14 (Unused)	
				15	Internal Sequence 15 (Unused)	
52880	5	ISEQMODE	Instrument Mode (Sequence #)	16-31	Not Available	B
				0	Safe Mode	
				1	Standby Mode	
				2	Crosstrack Mode	
				3	Biaxial Mode	
				4	Solar Calibration Mode	
				5	Diagnostic Configuration Mode	
				6	Internal Calibration Mode	
				7	Special Short Scan Mode	
				8	Contamination Safte Mode	
				9	Hold Mode	
				10	Abbrev'd Internal Cal Mode	
				11	Internal Sequence 11 (Unused)	
				12	Internal Sequence 12 (Unused)	
				13	Internal Sequence 13 (Unused)	
				14	Internal Sequence 14 (Unused)	
				15	Internal Sequence 15 (Unused)	
52885	5	ISEQPMODE	Instrument Previous Mode (Sequence #)	16-31	Not Available	B
				0	Command	
				1	Safe Hold	
				2	Solar Avoidance	
				3	Scan Timeout	
52890	3	SEQCHG	Mode (Sequence) Changed By	4-7	Not Used	B
52893	2	-------	Mode (Sequence) Has Been Changed	N/A	N/A	
52895	1	N/A	Spare	N/A	N/A	N/A
52896	5	SEQINDEX	Sequence Command Index	Counts		N/A
				0	Executing Sequence Cmds	
				1	Waiting for Next Scan Period	
				2	Waiting For Azimuth	
				3	Sequence Complete	
52901	3	SEQEXEC	Sequence Execution Status	4-7	Not Used	B
52904	8	SEQTIME	Sequence Time to Next Command	seconds		N/A
52912	16	-------	Time Mark Sample Number	N/A	N/A	
52928	16	-------	Time Mark Microseconds	N/A	N/A	
52944	16	-------	Time Code Sample Number	N/A	N/A	
52960	16	-------	Time Code Microseconds	N/A	N/A	

Start Bit	Bit Size	Mnemonic Name	Description	Units OR State Value	Conversion Coefficients (formula or C5,C4,C3,C2,C1,C0) OR State Name	Data Type
52976	16	N/A	Spare	N/A	N/A	N/A
52992	16	CMDCOUNT	Instrument Command Counter	Counts		N/A
53008	16	ICMAIN_0	Instrument Cmd Stack Item 0 - Main	N/A	N/A	
53024	16	ICPARM_0	Instrument Cmd Stack Item 0 - Parm	N/A	N/A	
53040	10	ICSMPL_0	Instrument Cmd Stack Item 0 - Sample	Counts		N/A
				0	Cmd Accepted	
				1	Cmd Not Used	
				2	Cmd Index Out of Range	
				3	Cmd Param Out of Range	
				4	Not a Valid Short Command	
				5	Not a Valid Long Command	
				6	Incorrect Checksum	
				7	Cmd Exceeded Mode Index	
				8	Not Accepted in Current mode	
				9	Not Accepted in Seq Execution	
				10	Can't Use Brake w- Az Moving	
				11	Can't Cage Az in Current Pos	
				12	Can't Move Az w- Brake On	
				13	Mode Not Allowed in this Mode	
				14	Pos A Must Be < Pos B	
53050	5	ICSTAT_0	Instrument Cmd Stack Item 0 - Status	15-31	Not Used	B
				0	Spacecraft	
53055	1	ICSRC_0	Instrument Cmd Stack Item 0 - Source	1	Internal Sequence	B
53056	16	ICMAIN_1	Instrument Cmd Stack Item 1 - Main	N/A	N/A	
53072	16	ICPARM_1	Instrument Cmd Stack Item 1 - Parm	N/A	N/A	
53088	10	ICSMPL_1	Instrument Cmd Stack Item 1 - Sample	Counts		N/A
				0	Cmd Accepted	
				1	Cmd Not Used	
				2	Cmd Index Out of Range	
				3	Cmd Param Out of Range	
				4	Not a Valid Short Command	
				5	Not a Valid Long Command	
				6	Incorrect Checksum	
				7	Cmd Exceeded Mode Index	
				8	Not Accepted in Current mode	
				9	Not Accepted in Seq Execution	
				10	Can't Use Brake w- Az Moving	
				11	Can't Cage Az in Current Pos	
				12	Can't Move Az w- Brake On	
				13	Mode Not Allowed in this Mode	
				14	Pos A Must Be < Pos B	
53098	5	ICSTAT_1	Instrument Cmd Stack Item 1 - Status	15-31	Not Used	B
				0	Spacecraft	
53103	1	ICSRC_1	Instrument Cmd Stack Item 1 - Source	1	Internal Sequence	B
53104	16	ICMAIN_2	Instrument Cmd Stack Item 2 - Main	N/A	N/A	
53120	16	ICPARM_2	Instrument Cmd Stack Item 2 - Parm	N/A	N/A	
53136	10	ICSMPL_2	Instrument Cmd Stack Item 2 - Sample	Counts		N/A

Check the JPSS MIS Server at https://jpssmis.gsfc.nasa.gov/frontmenu_dsp.cfm to verify that this is the correct version prior to use.

Start Bit	Bit Size	Mnemonic Name	Description	Units OR State Value	Conversion Coefficients (formula or C5,C4,C3,C2,C1,C0) OR State Name	Data Type
				0	Cmd Accepted	
				1	Cmd Not Used	
				2	Cmd Index Out of Range	
				3	Cmd Param Out of Range	
				4	Not a Valid Short Command	
				5	Not a Valid Long Command	
				6	Incorrect Checksum	
				7	Cmd Exceeded Mode Index	
				8	Not Accepted in Current mode	
				9	Not Accepted in Seq Execution	
				10	Can't Use Brake w- Az Moving	
				11	Can't Cage Az in Current Pos	
				12	Can't Move Az w- Brake On	
				13	Mode Not Allowed in this Mode	
				14	Pos A Must Be < Pos B	
53146	5	ICSTAT_2	Instrument Cmd Stack Item 2 - Status	15-31	Not Used	B
				0	Spacecraft	
53151	1	ICSRC_2	Instrument Cmd Stack Item 2 - Source	1	Internal Sequence	B
53152	16	ICMAIN_3	Instrument Cmd Stack Item 3 - Main	N/A	N/A	
53168	16	ICPARM_3	Instrument Cmd Stack Item 3 - Parm	N/A	N/A	
53184	10	ICSMPL_3	Instrument Cmd Stack Item 3 - Sample	Counts		N/A
				0	Cmd Accepted	
				1	Cmd Not Used	
				2	Cmd Index Out of Range	
				3	Cmd Param Out of Range	
				4	Not a Valid Short Command	
				5	Not a Valid Long Command	
				6	Incorrect Checksum	
				7	Cmd Exceeded Mode Index	
				8	Not Accepted in Current mode	
				9	Not Accepted in Seq Execution	
				10	Can't Use Brake w- Az Moving	
				11	Can't Cage Az in Current Pos	
				12	Can't Move Az w- Brake On	
				13	Mode Not Allowed in this Mode	
				14	Pos A Must Be < Pos B	
53194	5	ICSTAT_3	Instrument Cmd Stack Item 3 - Status	15-31	Not Used	B
				0	Spacecraft	
53199	1	ICSRC_3	Instrument Cmd Stack Item 3 - Source	1	Internal Sequence	B
53200	16	ICMAIN_4	Instrument Cmd Stack Item 4 - Main	N/A	N/A	
53216	16	ICPARM_4	Instrument Cmd Stack Item 4 - Parm	N/A	N/A	
53232	10	ICSMPL_4	Instrument Cmd Stack Item 4 - Sample	Counts		N/A

Check the JPSS MIS Server at https://jpssmis.gsfc.nasa.gov/frontmenu_dsp.cfm to verify that this is the correct version prior to use.

Start Bit	Bit Size	Mnemonic Name	Description	Units OR State Value	Conversion Coefficients (formula or C5,C4,C3,C2,C1,C0) OR State Name	Data Type
				0	Cmd Accepted	
				1	Cmd Not Used	
				2	Cmd Index Out of Range	
				3	Cmd Param Out of Range	
				4	Not a Valid Short Command	
				5	Not a Valid Long Command	
				6	Incorrect Checksum	
				7	Cmd Exceeded Mode Index	
				8	Not Accepted in Current mode	
				9	Not Accepted in Seq Execution	
				10	Can't Use Brake w- Az Moving	
				11	Can't Cage Az in Current Pos	
				12	Can't Move Az w- Brake On	
				13	Mode Not Allowed in this Mode	
				14	Pos A Must Be < Pos B	
53242	5	ICSTAT_4	Instrument Cmd Stack Item 4 - Status	15-31	Not Used	B
				0	Spacecraft	
53247	1	ICSRC_4	Instrument Cmd Stack Item 4 - Source	1	Internal Sequence	B
53248	16	ICMAIN_5	Instrument Cmd Stack Item 5 - Main	N/A	N/A	
53264	16	ICPARM_5	Instrument Cmd Stack Item 5 - Parm	N/A	N/A	
53280	10	ICSMPL_5	Instrument Cmd Stack Item 5 - Sample	Counts		N/A
				0	Cmd Accepted	
				1	Cmd Not Used	
				2	Cmd Index Out of Range	
				3	Cmd Param Out of Range	
				4	Not a Valid Short Command	
				5	Not a Valid Long Command	
				6	Incorrect Checksum	
				7	Cmd Exceeded Mode Index	
				8	Not Accepted in Current mode	
				9	Not Accepted in Seq Execution	
				10	Can't Use Brake w- Az Moving	
				11	Can't Cage Az in Current Pos	
				12	Can't Move Az w- Brake On	
				13	Mode Not Allowed in this Mode	
				14	Pos A Must Be < Pos B	
53290	5	ICSTAT_5	Instrument Cmd Stack Item 5 - Status	15-31	Not Used	B
				0	Spacecraft	
53295	1	ICSRC_5	Instrument Cmd Stack Item 5 - Source	1	Internal Sequence	B
53296	16	ICMAIN_6	Instrument Cmd Stack Item 6 - Main	N/A	N/A	
53312	16	ICPARM_6	Instrument Cmd Stack Item 6 - Parm	N/A	N/A	
53328	10	ICSMPL_6	Instrument Cmd Stack Item 6 - Sample	Counts		N/A

Check the JPSS MIS Server at https://jpssmis.gsfc.nasa.gov/frontmenu_dsp.cfm to verify that this is the correct version prior to use.

Start Bit	Bit Size	Mnemonic Name	Description	Units OR State Value	Conversion Coefficients (formula or C5,C4,C3,C2,C1,C0) OR State Name	Data Type
				0	Cmd Accepted	
				1	Cmd Not Used	
				2	Cmd Index Out of Range	
				3	Cmd Param Out of Range	
				4	Not a Valid Short Command	
				5	Not a Valid Long Command	
				6	Incorrect Checksum	
				7	Cmd Exceeded Mode Index	
				8	Not Accepted in Current mode	
				9	Not Accepted in Seq Execution	
				10	Can't Use Brake w- Az Moving	
				11	Can't Cage Az in Current Pos	
				12	Can't Move Az w- Brake On	
				13	Mode Not Allowed in this Mode	
				14	Pos A Must Be < Pos B	
53338	5	ICSTAT_6	Instrument Cmd Stack Item 6 - Status	15-31	Not Used	B
				0	Spacecraft	
53343	1	ICSRC_6	Instrument Cmd Stack Item 6 - Source	1	Internal Sequence	B
53344	16	ICMAIN_7	Instrument Cmd Stack Item 7 - Main	N/A	N/A	
53360	16	ICPARM_7	Instrument Cmd Stack Item 7 - Parm	N/A	N/A	
53376	10	ICSMPL_7	Instrument Cmd Stack Item 7 - Sample	Counts		N/A
				0	Cmd Accepted	
				1	Cmd Not Used	
				2	Cmd Index Out of Range	
				3	Cmd Param Out of Range	
				4	Not a Valid Short Command	
				5	Not a Valid Long Command	
				6	Incorrect Checksum	
				7	Cmd Exceeded Mode Index	
				8	Not Accepted in Current mode	
				9	Not Accepted in Seq Execution	
				10	Can't Use Brake w- Az Moving	
				11	Can't Cage Az in Current Pos	
				12	Can't Move Az w- Brake On	
				13	Mode Not Allowed in this Mode	
				14	Pos A Must Be < Pos B	
53386	5	ICSTAT_7	Instrument Cmd Stack Item 7 - Status	15-31	Not Used	B
				0	Spacecraft	
53391	1	ICSRC_7	Instrument Cmd Stack Item 7 - Source	1	Internal Sequence	B
53392	16	ERRCOUNT	Instrument Error Counter	Counts		N/A
53408	10	ERSMPL_0	Instrument Error Stack Item 0 - Sample	Counts		N/A

Check the JPSS MIS Server at https://jpssmis.gsfc.nasa.gov/frontmenu_dsp.cfm to verify that this is the correct version prior to use.

Start Bit	Bit Size	Mnemonic Name	Description	Units OR State Value	Conversion Coefficients (formula or C5,C4,C3,C2,C1,C0) OR State Name	Data Type
				0	No Error	
				1	Unexpected Interrupt	
				2	Illegal Intern'l Seq Control Value	
				3	Process Short Cmd Illegal Cmd	
				4	Process Long Cmd Illegal Cmd	
				5	Check Illegal Cmd	
				6	Rcvd 1553 Msg With an Error	
				7	Incorrect Init DMA Sync	
				8	Illegal Pack Data Indicat'r Val	
				9	Int Seq Index Limit Exceeded	
				10	Failed At Least 1 DMA Com	
				11	Illegal Hskpg Destination Size	
				12	Spurious DAP Clk Interrupt	
				13	Spurious ICP Clk Interrupt	
				14	ICA Got To DMA Transfer Late	
				15-19	Not Used	
				20	Potent Fail Brake Pos Sensor	
				21	Potent Fail Cover Pos Sensor	
				22	Main Cvr Lag Exceeded	
				23	Science Pkt Xfer Lockup Det	
				24	DAA & ICA Samp # No Match	
				25	DAA Reset bec Cont Com Fail	
				26	Science Packet Transfer OK	
				27-62	Not Used	
53418	6	ERTYPE_0	Instrument Error Stack Item 0 - Type	63	Undefined Error	B
53424	10	ERSMPL_1	Instrument Error Stack Item 1 - Sample	Counts		N/A
				0	No Error	
				1	Unexpected Interrupt	
				2	Illegal Intern'l Seq Control Value	
				3	Process Short Cmd Illegal Cmd	
				4	Process Long Cmd Illegal Cmd	
				5	Check Illegal Cmd	
				6	Rcvd 1553 Msg With an Error	
				7	Incorrect Init DMA Sync	
				8	Illegal Pack Data Indicat'r Val	
				9	Int Seq Index Limit Exceeded	
				10	Failed At Least 1 DMA Com	
				11	Illegal Hskpg Destination Size	
				12	Spurious DAP Clk Interrupt	
				13	Spurious ICP Clk Interrupt	
				14	ICA Got To DMA Transfer Late	
				15-19	Not Used	
				20	Potent Fail Brake Pos Sensor	
				21	Potent Fail Cover Pos Sensor	
				22	Main Cvr Lag Exceeded	
				23	Science Pkt Xfer Lockup Det	
				24	DAA & ICA Samp # No Match	
				25	DAA Reset bec Cont Com Fail	
				26	Science Packet Transfer OK	
				27-62	Not Used	
53434	6	ERTYPE_1	Instrument Error Stack Item 1 - Type	63	Undefined Error	B
53440	10	ERSMPL_2	Instrument Error Stack Item 2 - Sample	Counts		N/A

Check the JPSS MIS Server at https://jpssmis.gsfc.nasa.gov/frontmenu_dsp.cfm to verify that this is the correct version prior to use.

Start Bit	Bit Size	Mnemonic Name	Description	Units OR State Value	Conversion Coefficients (formula or C5,C4,C3,C2,C1,C0) OR State Name	Data Type
				0	No Error	
				1	Unexpected Interrupt	
				2	Illegal Intern'l Seq Control Value	
				3	Process Short Cmd Illegal Cmd	
				4	Process Long Cmd Illegal Cmd	
				5	Check Illegal Cmd	
				6	Rcvd 1553 Msg With an Error	
				7	Incorrect Init DMA Sync	
				8	Illegal Pack Data Indicat'r Val	
				9	Int Seq Index Limit Exceeded	
				10	Failed At Least 1 DMA Com	
				11	Illegal Hskpg Destination Size	
				12	Spurious DAP Clk Interrupt	
				13	Spurious ICP Clk Interrupt	
				14	ICA Got To DMA Transfer Late	
				15-19	Not Used	
				20	Potent Fail Brake Pos Sensor	
				21	Potent Fail Cover Pos Sensor	
				22	Main Cvr Lag Exceeded	
				23	Science Pkt Xfer Lockup Det	
				24	DAA & ICA Samp # No Match	
				25	DAA Reset bec Cont Com Fail	
				26	Science Packet Transfer OK	
				27-62	Not Used	
53450	6	ERTYPE_2	Instrument Error Stack Item 2 - Type	63	Undefined Error	B
53456	10	ERSMPL_3	Instrument Error Stack Item 3 - Sample	Counts		N/A
				0	No Error	
				1	Unexpected Interrupt	
				2	Illegal Intern'l Seq Control Value	
				3	Process Short Cmd Illegal Cmd	
				4	Process Long Cmd Illegal Cmd	
				5	Check Illegal Cmd	
				6	Rcvd 1553 Msg With an Error	
				7	Incorrect Init DMA Sync	
				8	Illegal Pack Data Indicat'r Val	
				9	Int Seq Index Limit Exceeded	
				10	Failed At Least 1 DMA Com	
				11	Illegal Hskpg Destination Size	
				12	Spurious DAP Clk Interrupt	
				13	Spurious ICP Clk Interrupt	
				14	ICA Got To DMA Transfer Late	
				15-19	Not Used	
				20	Potent Fail Brake Pos Sensor	
				21	Potent Fail Cover Pos Sensor	
				22	Main Cvr Lag Exceeded	
				23	Science Pkt Xfer Lockup Det	
				24	DAA & ICA Samp # No Match	
				25	DAA Reset bec Cont Com Fail	
				26	Science Packet Transfer OK	
				27-62	Not Used	
53466	6	ERTYPE_3	Instrument Error Stack Item 3 - Type	63	Undefined Error	B
53472	10	ERSMPL_4	Instrument Error Stack Item 4 - Sample	Counts		N/A

Check the JPSS MIS Server at https://jpssmis.gsfc.nasa.gov/frontmenu_dsp.cfm to verify that this is the correct version prior to use.

Start Bit	Bit Size	Mnemonic Name	Description	Units OR State Value	Conversion Coefficients (formula or C5,C4,C3,C2,C1,C0) OR State Name	Data Type
				0	No Error	
				1	Unexpected Interrupt	
				2	Illegal Intern'l Seq Control Value	
				3	Process Short Cmd Illegal Cmd	
				4	Process Long Cmd Illegal Cmd	
				5	Check Illegal Cmd	
				6	Rcvd 1553 Msg With an Error	
				7	Incorrect Init DMA Sync	
				8	Illegal Pack Data Indicat'r Val	
				9	Int Seq Index Limit Exceeded	
				10	Failed At Least 1 DMA Com	
				11	Illegal Hskpg Destination Size	
				12	Spurious DAP Clk Interrupt	
				13	Spurious ICP Clk Interrupt	
				14	ICA Got To DMA Transfer Late	
				15-19	Not Used	
				20	Potent Fail Brake Pos Sensor	
				21	Potent Fail Cover Pos Sensor	
				22	Main Cvr Lag Exceeded	
				23	Science Pkt Xfer Lockup Det	
				24	DAA & ICA Samp # No Match	
				25	DAA Reset bec Cont Com Fail	
				26	Science Packet Transfer OK	
				27-62	Not Used	
53482	6	ERTYPE_4	Instrument Error Stack Item 4 - Type	63	Undefined Error	B
53488	10	ERSMPL_5	Instrument Error Stack Item 5 - Sample	Counts		N/A
				0	No Error	
				1	Unexpected Interrupt	
				2	Illegal Intern'l Seq Control Value	
				3	Process Short Cmd Illegal Cmd	
				4	Process Long Cmd Illegal Cmd	
				5	Check Illegal Cmd	
				6	Rcvd 1553 Msg With an Error	
				7	Incorrect Init DMA Sync	
				8	Illegal Pack Data Indicat'r Val	
				9	Int Seq Index Limit Exceeded	
				10	Failed At Least 1 DMA Com	
				11	Illegal Hskpg Destination Size	
				12	Spurious DAP Clk Interrupt	
				13	Spurious ICP Clk Interrupt	
				14	ICA Got To DMA Transfer Late	
				15-19	Not Used	
				20	Potent Fail Brake Pos Sensor	
				21	Potent Fail Cover Pos Sensor	
				22	Main Cvr Lag Exceeded	
				23	Science Pkt Xfer Lockup Det	
				24	DAA & ICA Samp # No Match	
				25	DAA Reset bec Cont Com Fail	
				26	Science Packet Transfer OK	
				27-62	Not Used	
53498	6	ERTYPE_5	Instrument Error Stack Item 5 - Type	63	Undefined Error	B
53504	10	ERSMPL_6	Instrument Error Stack Item 6 - Sample	Counts		N/A

Check the JPSS MIS Server at https://jpssmis.gsfc.nasa.gov/frontmenu_dsp.cfm to verify that this is the correct version prior to use.

Start Bit	Bit Size	Mnemonic Name	Description	Units OR State Value	Conversion Coefficients (formula or C5,C4,C3,C2,C1,C0) OR State Name	Data Type
				0	No Error	
				1	Unexpected Interrupt	
				2	Illegal Intern'l Seq Control Value	
				3	Process Short Cmd Illegal Cmd	
				4	Process Long Cmd Illegal Cmd	
				5	Check Illegal Cmd	
				6	Rcvd 1553 Msg With an Error	
				7	Incorrect Init DMA Sync	
				8	Illegal Pack Data Indicat'r Val	
				9	Int Seq Index Limit Exceeded	
				10	Failed At Least 1 DMA Com	
				11	Illegal Hskpg Destination Size	
				12	Spurious DAP Clk Interrupt	
				13	Spurious ICP Clk Interrupt	
				14	ICA Got To DMA Transfer Late	
				15-19	Not Used	
				20	Potent Fail Brake Pos Sensor	
				21	Potent Fail Cover Pos Sensor	
				22	Main Cvr Lag Exceeded	
				23	Science Pkt Xfer Lockup Det	
				24	DAA & ICA Samp # No Match	
				25	DAA Reset bec Cont Com Fail	
				26	Science Packet Transfer OK	
				27-62	Not Used	
53514	6	ERTYPE_6	Instrument Error Stack Item 6 - Type	63	Undefined Error	B
53520	10	ERSMPL_7	Instrument Error Stack Item 7 - Sample	Counts		N/A
				0	No Error	
				1	Unexpected Interrupt	
				2	Illegal Intern'l Seq Control Value	
				3	Process Short Cmd Illegal Cmd	
				4	Process Long Cmd Illegal Cmd	
				5	Check Illegal Cmd	
				6	Rcvd 1553 Msg With an Error	
				7	Incorrect Init DMA Sync	
				8	Illegal Pack Data Indicat'r Val	
				9	Int Seq Index Limit Exceeded	
				10	Failed At Least 1 DMA Com	
				11	Illegal Hskpg Destination Size	
				12	Spurious DAP Clk Interrupt	
				13	Spurious ICP Clk Interrupt	
				14	ICA Got To DMA Transfer Late	
				15-19	Not Used	
				20	Potent Fail Brake Pos Sensor	
				21	Potent Fail Cover Pos Sensor	
				22	Main Cvr Lag Exceeded	
				23	Science Pkt Xfer Lockup Det	
				24	DAA & ICA Samp # No Match	
				25	DAA Reset bec Cont Com Fail	
				26	Science Packet Transfer OK	
				27-62	Not Used	
53530	6	ERTYPE_7	Instrument Error Stack Item 7 - Type	63	Undefined Error	B
53536	80	N/A	Spare	N/A	N/A	N/A

Check the JPSS MIS Server at https://jpssmis.gsfc.nasa.gov/frontmenu_dsp.cfm to verify that this is the correct version prior to use.

Start Bit	Bit Size	Mnemonic Name	Description	Units OR State Value	Conversion Coefficients (formula or C5,C4,C3,C2,C1,C0) OR State Name	Data Type
53616	3	TBRDGCS	Total Bridge Bal. Control Status	0 1 2 3-7	Bridge Balance Off Bridge Balance Maintenance Bridge Balance Reset Not Used	B
53619	1	TBRDGDVS	Total Bridge Bal. DAC Update Status	0 1	DAC Value Unchanged DAC Value Updated	B
53620	5	TOTBRST	Total Bridge Bal. Reset Calculation Counter	Counts		N/A
53625	7	N/A	Spare	N/A	N/A	N/A
53632	12	TOTBSLA	Total Space Look Average	Counts		N/A
53644	4	N/A	Spare	N/A	N/A	N/A
53648	12	TBBDACC	Total Bridge Bal. Coarse DAC Value	Counts		N/A
53660	4	N/A	Spare	N/A	N/A	N/A
53664	12	TBBDACF	Total Bridge Bal. Fine DAC Value	Counts		N/A
53676	4	N/A	Spare	N/A	N/A	N/A
53680	3	SBRDGCS	SW Bridge Bal. Control Status	0 1 2 3-7	Bridge Balance Off Bridge Balance Maintenance Bridge Balance Reset Not Used	B
53683	1	SBRDGDVS	SW Bridge Bal. DAC Update Status	0 1	DAC Value Unchanged DAC Value Updated	B
53684	5	SWBRST	SW Bridge Bal. Reset Calculation Counter	Counts		N/A
53689	7	N/A	Spare	N/A	N/A	N/A
53696	12	SWBSLA	SW Space Look Average	Counts		N/A
53708	4	N/A	Spare	N/A	N/A	N/A
53712	12	SWBBDACC	SW Bridge Bal. Coarse DAC Value	Counts		N/A
53724	4	N/A	Spare	N/A	N/A	N/A
53728	12	SWBBDACF	SW Bridge Bal. Fine DAC Value	Counts		N/A
53740	4	N/A	Spare	N/A	N/A	N/A
53744	3	LBRDGCS	LW Bridge Bal. Control Status	0 1 2 3-7	Bridge Balance Off Bridge Balance Maintenance Bridge Balance Reset Not Used	B
53747	1	LBRDGDVS	LW Bridge Bal. DAC Update Status	0 1	DAC Value Unchanged DAC Value Updated	B
53748	5	LWBRST	LW Bridge Bal. Reset Calculation Counter	Counts		N/A
53753	7	N/A	Spare	N/A	N/A	N/A
53760	12	LWBSLA	LW Space Look Average	Counts		N/A
53772	4	N/A	Spare	N/A	N/A	N/A
53776	12	LWBBDACC	LW Bridge Bal. Coarse DAC Value	Counts		N/A
53788	4	N/A	Spare	N/A	N/A	N/A
53792	12	LWBBDACF	LW Bridge Bal. Fine DAC Value	Counts		N/A
53804	4	N/A	Spare	N/A	N/A	N/A
53808	10	BRDGSLS	Bridge Bal. Space Look Start	Sample		N/A
53818	6	N/A	Spare	N/A	N/A	N/A
53824	10	BRDGSLE	Bridge Bal. Space Look End	Sample		N/A
53834	6	N/A	Spare	N/A	N/A	N/A
53840	10	BRDGUSN	Bridge Bal. DAC Update Sample Number	Sample		N/A
53850	6	N/A	Spare	N/A	N/A	N/A
53856	12	BRDGWINH	Bridge Bal. Window High	Counts		N/A
53868	4	N/A	Spare	N/A	N/A	N/A
53872	12	BRDGWINL	Bridge Bal. Window Low	Counts		N/A
53884	4	N/A	Spare	N/A	N/A	N/A
53888	12	BRDGWINS	Bridge Bal. Window Set Point	Counts		N/A
53900	4	N/A	Spare	N/A	N/A	N/A
53904	12	TSTPTT	Total Detector Temp. Setpoint	Counts		N/A

Check the JPSS MIS Server at https://jpssmis.gsfc.nasa.gov/frontmenu_dsp.cfm to verify that this is the correct version prior to use.

Start Bit	Bit Size	Mnemonic Name	Description	Units OR State Value	Conversion Coefficients (formula or C5,C4,C3,C2,C1,C0) OR State Name	Data Type
				0	Temperature Control Off	
53916	1	TOTTCTRL	Total Detector Temp. Control Status	1	Temperature Control On	B
53917	3	N/A	Spare	N/A	N/A	N/A
53920	12	SWSTPTT	SW Detector Temp. Setpoint	Counts		N/A
				0	Temperature Control Off	
53932	1	SWTCTRL	SW Detector Temp. Control Status	1	Temperature Control On	B
53933	3	N/A	Spare	N/A	N/A	N/A
53936	12	LWSTPTT	LW Detector Temp. Setpoint	Counts		N/A
				0	Temperature Control Off	
53948	1	LWTCTRL	LW Detector Temp. Control Status	1	Temperature Control On	B
53949	3	N/A	Spare	N/A	N/A	N/A
53952	12	BBSETT	Blackbody Temp. Setpoint	Counts		N/A
				0	Temperature Control Off	
53964	1	BBCTRL	Blackbody Temp. Control	1	Temperature Control On	B
53965	3	N/A	Spare	N/A	N/A	N/A
				0	SWICS Lamp Off	
				1	SWICS Lamp @ Level 1	
				2	SWICS Lamp @ Level 2	
53968	2	SWICSI	SWICS Intensity Level	3	SWICS Lamp @ Level 3	B
53970	30	N/A	Spare	N/A	N/A	N/A
				0	Stow	
				1	Normal Earth Scan	
				2	Short Earth Scan	
				3	MAM Scan	
				4	Nadir Scan	
				5	Noise Test 1	
				6	Noise Test 2	
				7	Cal Mode 5	
				8	Cal Mode 6A	
				9	Cal Mode 6B	
				10	Cal Mode 7	
				11	Cal Mode 8A	
				12	Cal Mode 8B	
				13	Cal Mode 11	
				14	Cal Mode 12	
				15	Cal Mode 14	
54000	5	ELSCAN	Elevation Scan Mode	16-31	Not Available	B
				0	Stow	
				1	Normal Earth Scan	
				2	Short Earth Scan	
				3	MAM Scan	
				4	Nadir Scan	
				5	Noise Test 1	
				6	Noise Test 2	
				7	Cal Mode 5	
				8	Cal Mode 6A	
				9	Cal Mode 6B	
				10	Cal Mode 7	
				11	Cal Mode 8A	
				12	Cal Mode 8B	
				13	Cal Mode 11	
				14	Cal Mode 12	
				15	Cal Mode 14	
54005	5	DECKELEV	Elevation On-Deck Scan Mode	16-31	Not Available	B

Check the JPSS MIS Server at https://jpssmis.gsfc.nasa.gov/frontmenu_dsp.cfm to verify that this is the correct version prior to use.

Start Bit	Bit Size	Mnemonic Name	Description	Units OR State Value	Conversion Coefficients (formula or C5,C4,C3,C2,C1,C0) OR State Name	Data Type
				0	Nominal Scan Operation	
				1	Initialization In-Progress	
				2	Elevation @ Initialized Position	
				3	Scan Abort In-Progress	
				4	Elevation @ Aborted Position	
54010	3	ELEVSTAT	Elevation Status	5-7	Not Used	B
				0	Drive Disabled	
54013	1	ELMDRV	Elevation Motor Drive Status	1	Drive Enabled	B
				0	Low Encoder LED Intensity	
54014	1	ELEVLED	Elevation Encoder LED Level	1	High Encoder LED Intensity	B
				0	Gimbal Not Stalled	
54015	1	ELSTALL	Elevation Stall Indicator	1	Gimbal Stalled	B
54016	16	ELPOFFC	Elevation Offset Correction	deg		N/A
54032	16	ELSTERR	Elevation Stall Error Threshold	Counts		N/A
54048	10	ELSTCNT	Elevation Stall Count Threshold	Counts		N/A
54058	6	N/A	Spare	N/A	N/A	N/A
54064	16	ELPERR1	Elevation Position Error #1	Counts		N/A
54080	16	ELPERR2	Elevation Position Error #2	Counts		N/A
54096	16	ELPERR3	Elevation Position Error #3	Counts		N/A
				0	Stop	
				1	Open	
				2	Close	
				3	Not Used	
				4	Fixed Step Towards Open	
				5	Fixed Step Towards Closed	
54112	4	MAINCCMD	Main Cover Command	6-15	Not Used	B
				0	Cover Stopped	
				1	Cover Opening	
				2	Cover Closing	
				3	Not Used	
				4	Cover Stepping Forward	
				5	Cover Stepping Reverse	
				6-14	Not Used	
54116	4	MAINCOVM	Main Cover Motion Status	15	Cover Start Moving	B
				0	Not @ Opened or Closed	
				1	@ Open	
				2	@ Closed	
				3	Not Used	
				4	Potential Bad Sensor	
54120	4	MAINPSTAT	Main Cover Position Status	5-15	Not Used	B
				0	Cover Sensor 1 Active	
				1	Cover Sensor 2 Active	
54124	2	MAINACTS	Main Cover Active Position Sensor	2-3	Not Used	B
54126	2	N/A	Spare	N/A	N/A	N/A
54128	12	MAINCMDP	Main Cover Commanded Position	Counts		N/A
54140	4	N/A	Spare	N/A	N/A	N/A
54144	8	MAINLAG1	Main Cover Sensor 1 Accumulated Lag	Counts		N/A
54152	8	N/A	Spare	N/A	N/A	N/A
54160	8	MAINLAG2	Main Cover Sensor 2 Accumulated Lag	Counts		N/A
54168	8	N/A	Spare	N/A	N/A	N/A
54176	16	MAINSTEPC	Main Cover Step Count	Counts		N/A
54192	12	MAINCLOS	Main Cover Closed Position Definition	Counts		N/A
54204	4	N/A	Spare	N/A	N/A	N/A
54208	12	MAINOPEN	Main Cover Open Position Definition	Counts		N/A
54220	4	N/A	Spare	N/A	N/A	N/A
54224	12	MAINCMAR	Main Cover Closed Margin Definition	Counts		N/A
54236	4	N/A	Spare	N/A	N/A	N/A

Check the JPSS MIS Server at https://jpssmis.gsfc.nasa.gov/frontmenu_dsp.cfm to verify that this is the correct version prior to use.

Start Bit	Bit Size	Mnemonic Name	Description	Units OR State Value	Conversion Coefficients (formula or C5,C4,C3,C2,C1,C0) OR State Name	Data Type
54240	12	MAINOMAR	Main Cover Open Margin Definition	Counts		N/A
54252	4	N/A	Spare	N/A	N/A	N/A
				0	Stop	
				1	Open	
				2	Close	
				3	Not Used	
				4	Fixed Step Towards Open	
				5	Fixed Step Towards Closed	
54256	4	MAMCCMD	MAM Cover Command	6-15	Not Used	B
				0	Cover Stopped	
				1	Cover Opening	
				2	Cover Closing	
				3	Not Used	
				4	Cover Stepping Forward	
				5	Cover Stepping Reverse	
				6-14	Not Used	
54260	4	MAMCOVM	MAM Cover Motion Status	15	Cover Start Moving	B
				0	Not @ Opened or Closed	
				1	@ Open	
				2	@ Closed	
				3	Not Used	
				4	Potential Bad Sensor	
54264	4	MAMPSTAT	MAM Cover Position Status	5-15	Not Used	B
				0	Cover Sensor 1 Active	
				1	Cover Sensor 2 Active	
54268	2	MAMACTS	MAM Cover Active Position Sensor	2-3	Not Used	B
54270	2	N/A	Spare	N/A	N/A	N/A
54272	12	MAMCMDP	MAM Cover Commanded Position	Counts		N/A
54284	36	N/A	Spare	N/A	N/A	N/A
54320	16	MAMSTEPC	MAM Cover Step Count	Counts		N/A
54336	12	MAMCLOS	MAM Cover Closed Position Definition	Counts		N/A
54348	4	N/A	Spare	N/A	N/A	N/A
54352	12	MAMOPEN	MAM Cover Open Position Definition	Counts		N/A
54364	4	N/A	Spare	N/A	N/A	N/A
54368	12	MAMCMAR	MAM Cover Closed Margin Definition	Counts		N/A
54380	4	N/A	Spare	N/A	N/A	N/A
54384	12	MAMOMAR	MAM Cover Open Margin Definition	Counts		N/A
54396	4	N/A	Spare	N/A	N/A	N/A
				0	Reset Not bec. W/D Timeout	
54400	1	DWDGBOOT	DAP Processor Boot Status	1	Reset bec. Watchdog Timeout	B
				0	Disarm Watchdog Timer	
54401	1	DWDGENBL	DAP Processor Watchdog Enable Status	1	Arm Watchdog Timer	B
				0	PROM Power On	
54402	1	DPROMPWR	DAP Processor PROM Power Status	1	PROM Power Off	B
54403	2	-------	DAP Sample Clock Interrupt Occurred	N/A	N/A	N/A
54405	11	N/A	Spare	N/A	N/A	N/A
54416	16	DSCANPER	DAP Processor Scan Period Count	Counts		N/A
54432	16	DMEMSOFF	DAP Mem Dump Start Address Offset	Offset		N/A
54448	16	DMEMSSEG	DAP Mem Dump Start Address Segment	Segment		N/A
54464	16	DMEMEOFF	DAP Mem Dump End Address Offset	Offset		N/A
54480	16	DMEMESEG	DAP Mem Dump End Address Segment	Segment		N/A
54496	16	DPCKSOFF	DAP Mem Dump Pckt Start Address Offset	Offset		N/A
54512	16	DPCKSSEG	DAP Mem Dump Pckt Start Address Seg.	Segment		N/A
54528	16	-------	DAP Mem Dump Address Changed	N/A	N/A	N/A

Check the JPSS MIS Server at https://jpssmis.gsfc.nasa.gov/frontmenu_dsp.cfm to verify that this is the correct version prior to use.

Start Bit	Bit Size	Mnemonic Name	Description	Units OR State Value	Conversion Coefficients (formula or C5,C4,C3,C2,C1,C0) OR State Name	Data Type
54544	16	DPMINET	DAP Min Execution Time	msec		N/A
54560	11	DPMINESN	DAP Min Execution Sample Number	Counts		N/A
54571	5	N/A	Spare	N/A	N/A	N/A
54576	16	DPMAXET	DAP Max Execution Time	msec		N/A
54592	11	DPMAXESN	DAP Max Execution Sample Number	Counts		N/A
54603	5	N/A	Spare	N/A	N/A	N/A
54608	16	DCODCKSUM	DAP RAM Code Checksum	N/A	N/A	
54624	16	DROMCKSUM	DAP ROM Checksum	N/A	N/A	
54640	80	N/A	Spare	N/A	N/A	N/A
54720	5	AZMODE	Azimuth Mode	0 1 2 3 4 5 6 7 8 9 10 11-15 16-31	Go to Crosstrack Go to Position A Go to Position B Go to Solar Calibration Angle Go to Caged Go to Spare Position 1 Go to Spare Position 2 Go to Spare Position 3 Scan A to B Asynchronous Scan A to B Synchronous Stop Azimuth Not Used Not Available	B
54725	1	AZMOT	Azimuth Motion Status	0 1	Stopped Moving	B
54726	1	AZDIR	Azimuth Direction Status	0 1	Forward Reverse	B
54727	4	AZPOSSTAT	Azimuth Position Status	0 1 2 3 4 5-15	At Go to Position At Stopped At Initial Position At Scan Position In Motion Not Used	B
54731	1	AZMDRV	Azimuth Motor Drive Status	0 1	Drive Disabled Drive Enabled	B
54732	1	AZLED	Azimuth Encoder LED Level	0 1	Low Encoder LED Intensity High Encoder LED Intensity	B
54733	1	AZSTALL	Azimuth Stall Indicator	0 1	Gimbal Not Stalled Gimbal Stalled	B
54734	2	N/A	Spare	N/A	N/A	N/A
54736	16	AZFIX0	Crosstrack Position Definition	deg		N/A
54752	16	AZFIX1	Position A Definition	deg		N/A
54768	16	AZFIX2	Position B Definition	deg		N/A
54784	16	AZFIX3	Solar Cal. Position Definition	deg		N/A
54800	16	AZFIX4	Az Cage Position Definition	deg		N/A
54816	16	AZFIX5	Spare Az Position Definition #1	deg		N/A
54832	16	AZFIX6	Spare Az Position Definition #2	deg		N/A
54848	16	AZFIX7	Spare Az Position Definition #3	deg		N/A
54864	16	AZRATE0	Normal (GOTO) AZ Rate Definition	deg/sec		N/A
54880	16	AZRATE1	Unsync AZ Scan Rate Definition	deg/sec		N/A
54896	16	AZRATE2	Sync AZ Scan Rate Definition	deg/sec		N/A
54912	16	AZCORR	Azimuth Offset Correction	deg		N/A
54928	16	AZSTERR	Azimuth Stall Error Threshold	Counts		N/A
54944	10	AZSTCNT	Azimuth Stall Count Threshold	Counts		N/A
54954	6	N/A	Spare	N/A	N/A	N/A

Check the JPSS MIS Server at https://jpssmis.gsfc.nasa.gov/frontmenu_dsp.cfm to verify that this is the correct version prior to use.

Start Bit	Bit Size	Mnemonic Name	Description	Units OR State Value	Conversion Coefficients (formula or C5,C4,C3,C2,C1,C0) OR State Name	Data Type
				0	Stop	
				1	Cage	
				2	Apply	
				3	Release	
				4	Fixed Step Towards Cage	
				5	Fixed Step Towards Applied	
54960	4	BRAKECMD	Brake Command Status	6-15	Not Used	B
				0	Stopped	
				1	Caging	
				2	Applying	
				3	Releasing	
				4	Forward Stepping	
				5	Reverse Stepping	
				6-14	Not Used	
54964	4	BRAKEMOT	Brake Motion Status	15	Start Moving	B
				0	Not @ Relessd, Appld or Caged	
				1	@ Caged	
				2	@ Applied	
				3	@ Released	
				4	Potential Bad Position Sensor	
54968	4	BRAKEPOS	Brake Position Status	5-15	Not Used	B
54972	4	N/A	Spare	N/A	N/A	N/A
54976	12	BRKCMDPS	Brake Commanded Position	Counts		N/A
54988	4	N/A	Spare	N/A	N/A	N/A
54992	12	BRKCURPS	Brake Current Position	Counts		N/A
55004	4	N/A	Spare	N/A	N/A	N/A
55008	8	BRKPSMUX	Brake Position Submux Channel	N/A	N/A	N/A
55016	8	N/A	Spare	N/A	N/A	N/A
55024	16	BRKSCNT	Brake Step Count	Counts		N/A
55040	12	BRKRELEA	Brake Released Position Definition	Counts		N/A
55052	4	N/A	Spare	N/A	N/A	N/A
55056	12	BRKAPPLY	Brake Applied Position Definition	Counts		N/A
55068	4	N/A	Spare	N/A	N/A	N/A
55072	12	BRKCAGED	Brake Caged Position Definition	Counts		N/A
55084	4	N/A	Spare	N/A	N/A	N/A
55088	12	BRKRMAR	Brake Released Margin	Counts		N/A
55100	4	N/A	Spare	N/A	N/A	N/A
55104	12	BRKAMAR	Brake Applied Margin	Counts		N/A
55116	4	N/A	Spare	N/A	N/A	N/A
55120	12	BRKCMAR	Brake Caged Margin	Counts		N/A
55132	4	N/A	Spare	N/A	N/A	N/A
55136	16	AZPERR	Azimuth Position Error	Counts		N/A
55152	5	N/A	Spare	N/A	N/A	N/A
				0	Bus A Selected	
55157	1	TMFBUS	Time Mark & Frequency Bus Select	1	Bus B Selected	B
				0	No Time Mark & Freq Interrupt	
55158	1	TMFINT	Time Mark & Frequency Interrupt	1	TM & Freq Interrupt Occurred	B
55159	9	N/A	Spare	N/A	N/A	N/A

Check the JPSS MIS Server at https://jpssmis.gsfc.nasa.gov/frontmenu_dsp.cfm to verify that this is the correct version prior to use.

Start Bit	Bit Size	Mnemonic Name	Description	Units OR State Value	Conversion Coefficients (formula or C5,C4,C3,C2,C1,C0) OR State Name	Data Type
55168	1	IWDGBOOT	ICP Processor Boot Status	0 1	Reset Not bec. W/D Timeout Reset bec. Watchdog Timeout	B
55169	1	IWDGENBL	ICP Processor Watchdog Enable Status	0 1	Disarm Watchdog Timer Arm Watchdog Timer	B
55170	1	IPROMPWR	ICP Processor PROM Power Status	0 1	PROM Power On PROM Power Off	B
55171	2	-------	ICP Sample Clock Interrupt Occurred	N/A	N/A	N/A
55173	3	COMMSTAT	DMA Communication Status	0 1 2 3 4-7	DMA Communication OK DMA Transmit Timed Out DMA Receive Timed Out Sample Numbers Out of Sync Not Used (TRMM only)	B
55176	8	N/A	Spare	N/A	N/A	N/A
55184	16	ISCANPER	ICP Processor Scan Period Count	Counts		N/A
55200	16	IMEMSOFF	ICP Mem Dump Start Address Offset	Offset		N/A
55216	16	IMEMSSEG	ICP Mem Dump Start Address Segment	Segment		N/A
55232	16	IMEMEOFF	ICP Mem Dump End Address Offset	Offset		N/A
55248	16	IMEMESEG	ICP Mem Dump End Address Segment	Segment		N/A
55264	16	IPCKSOFF	ICP Mem Dump Pckt Start Address Offset	Offset		N/A
55280	16	IPCKSSEG	ICP Mem Dump Pckt Start Address Seg.	Segment		N/A
55296	16	-------	ICP Mem Dump Address Changed	N/A	N/A	
55312	16	IPMINET	ICP Min Execution Time	msec		N/A
55328	11	IPMINESN	ICP Min Execution Sample Number	Counts		N/A
55339	5	N/A	Spare	N/A	N/A	N/A
55344	16	IPMAXET	ICP Max Execution Time	msec		N/A
55360	11	IPMAXESN	ICP Max Execution Sample Number	Counts		N/A
55371	5	N/A	Spare	N/A	N/A	N/A
55376	16	ICODCKSUM	ICP RAM Code Checksum	N/A	N/A	N/A
55392	16	IROMCKSUM	ICP ROM Checksum	N/A	N/A	N/A
55408	80	N/A	Spare	N/A	N/A	N/A
55488	1	SPS1STAT	SPS 1 Sun Presence State	0 1	Sun is Not Present Sun is Present	B
55489	1	SPS2STAT	SPS 2 Sun Presence State	0 1	Sun is Not Present Sun is Present	B
55490	1	SPS1RESP	SPS 1 Sun Presence Response	0 1	Solar Pres Response Disabled Solar Pres Response Enabled	B
55491	1	SPS2RESP	SPS 2 Sun Presence Response	0 1	Solar Pres Response Disabled Solar Pres Response Enabled	B
55492	2	SOLWARN	Solar Warning Status	0 1 2-3	Solar Warning Not Issued Solar Warning Issued Unused	B
55494	1	STOUTRSP	Scan Timeout Response	0 1	Scan T/O Response Disabled Scan T/O Response Enabled	B
55495	2	STOUTAC	Scan Timeout Actively Counting	0 1 2-3	Scan T/O Not Actively Counting Scan T/O Actively Counting Unused	B
55497	2	STOUTOCC	Scan Timeout Occurred	0 1 2-3	No Scan Timeout Scan Timeout Occurred Unused	B
55499	5	N/A	Spare	N/A	N/A	N/A
55504	16	SWRNSMPL	Solar Warning Event Sample	Counts		N/A
55520	16	SWRNSCAN	Solar Warning Event Scan Period	Counts		N/A
55536	16	STOUTSCN	Scan Timeout Scan Period	Counts		N/A

Check the JPSS MIS Server at https://jpssmis.gsfc.nasa.gov/frontmenu_dsp.cfm to verify that this is the correct version prior to use.

Start Bit	Bit Size	Mnemonic Name	Description	Units OR State Value	Conversion Coefficients (formula or C5,C4,C3,C2,C1,C0) OR State Name	Data Type
55552	12	SPSS1	SPS 1 Narrow (Signal) Output	Counts		N/A
55564	4	N/A	Spare	N/A	N/A	N/A
55568	12	SPST1	SPS 1 Wide (Threshold) Output	Counts		N/A
55580	4	N/A	Spare	N/A	N/A	N/A
55584	12	SPS1TNOI	SPS 1 Noise Threshold	Counts		N/A
55596	4	N/A	Spare	N/A	N/A	N/A
55600	6	SPS1TNUM	SPS 1 Ratio Threshold	Counts		N/A
55606	10	N/A	Spare	N/A	N/A	N/A
55616	1	SPS1DETS	SPS 1 Solar Detection State	0 1	Sun Not Detected Sun Detected	B
55617	15	N/A	Spare	N/A	N/A	N/A
55632	10	SPS1DETC	SPS 1 Detection Count	Counts		N/A
55642	6	N/A	Spare	N/A	N/A	N/A
55648	10	SPS1CNTT	SPS 1 Count Threshold	Counts		N/A
55658	6	N/A	Spare	N/A	N/A	N/A
55664	10	SPS1MAXC	SPS 1 Max Det Count During Scan	Counts		N/A
55674	6	N/A	Spare	N/A	N/A	N/A
55680	12	SPSS2	SPS 2 Narrow (Signal) Output	Counts		N/A
55692	4	N/A	Spare	N/A	N/A	N/A
55696	12	SPST2	SPS 2 Wide (Threshold) Output	Counts		N/A
55708	4	N/A	Spare	N/A	N/A	N/A
55712	12	SPS2TNOI	SPS 2 Noise Threshold	Counts		N/A
55724	4	N/A	Spare	N/A	N/A	N/A
55728	6	SPS2TNUM	SPS 2 Ratio Threshold	Counts		N/A
55734	10	N/A	Spare	N/A	N/A	N/A
55744	1	SPS2DETS	SPS 2 Solar Detection State	0 1	Sun Not Detected Sun Detected	B
55745	15	N/A	Spare	N/A	N/A	N/A
55760	10	SPS2DETC	SPS 2 Detection Count	Counts		N/A
55770	6	N/A	Spare	N/A	N/A	N/A
55776	10	SPS2CNTT	SPS 2 Count Threshold	Counts		N/A
55786	6	N/A	Spare	N/A	N/A	N/A
55792	10	SPS2MAXC	SPS 2 Max Det Count During Scan	Counts		N/A
55802	6	N/A	Spare	N/A	N/A	N/A
55808	10	SCNTINIT	Scan Count Initial	Counts		N/A
55818	6	N/A	Spare	N/A	N/A	N/A
55824	10	SCNTCRNT	Scan Count Current	Counts		N/A
55834	6	N/A	Spare	N/A	N/A	N/A

Check the JPSS MIS Server at https://jpssmis.gsfc.nasa.gov/frontmenu_dsp.cfm to verify that this is the correct version prior to use.

4.6 Spacecraft

4.6.1 Introduction

Generally, the data the Spacecraft bus generates is not considered mission data. Its housekeeping telemetry is transmitted over the narrowband data link. Thus it is documented in the C&T Handbook and not here in the MDFCB. There are two exceptions.

One exception is a fill packet the spacecraft generates to ensure that small instrument memory dumps are transmitted completely and expeditiously. This packet with fixed content can be commanded into APIDs 100 to 131, one at any given time. A combination of factors makes this packet necessary. Because only complete frames are transmitted and because packets can span frames, it is possible for the end of a packet to be in an incomplete frame. For packet types output frequently, the next packet generated will fill the frame and make it ready for transmission. But since memory dumps occur infrequently, the end of memory dump packet may remain in an incomplete frame for a significant time. The same is true of other packet types. The spacecraft fill packet fixes this. Each virtual channel has a fill packet with a unique APID to fill its incomplete frames.

The second spacecraft packet included in the MDFCB is the Attitude and Ephemeris packet whose data are required to geolocate the science data. A description of the science data is incomplete and meaningless if the attitude and ephemeris data are not included.

4.6.2 Instrument Function

N/A

4.6.3 Modes and Packet Structure

The modes of the spacecraft and observatory are described in Section 3.2. Table 4.6-1 is similar to the tables in previous sections, showing the fill packet APID, VCID, data rate and packet size. In this case, the data rate is listed by instrument mode, not the spacecraft mode.

Check the JPSS MIS Server at https://jpssmis.gsfc.nasa.gov/frontmenu_dsp.cfm to verify that this is the correct version prior to use.

Table 4.6-1. Spacecraft Mission Data Packet Types

VC ID	$APID_{10}$	Telemetry Packet Name	Data Rate (bps) by Mode	Downlink		Packet Size (octets)
			Operational or Diagnostic	HRD	SMD	
0	11	Ephemeris/Attitude Message	568	✓	✓	71
0	100	S/C Test / Fill Packet	164,400	✓	✓	2055
1	101	S/C Test / Fill Packet	164,400	✓	✓	2055
2	102	S/C Test / Fill Packet	164,400		✓	2055
3	103	S/C Test / Fill Packet	164,400		✓	2055
4	104	S/C Test / Fill Packet	164,400	✓		2055
5	105	S/C Test / Fill Packet	164,400			2055
6	106	S/C Test / Fill Packet	164,400	✓	✓	2055
7	107	S/C Test / Fill Packet	164,400		✓	2055
8	108	S/C Test / Fill Packet	164,400		✓	2055
9	109	S/C Test / Fill Packet	164,400	✓		2055
10	110	S/C Test / Fill Packet	164,400			2055
11	111	S/C Test / Fill Packet	164,400	✓	✓	2055
12	112	S/C Test / Fill Packet	164,400		✓	2055
13	113	S/C Test / Fill Packet	164,400		✓	2055
14	114	S/C Test / Fill Packet	164,400	✓		2055
15	115	S/C Test / Fill Packet	164,400			2055
16	116	S/C Test / Fill Packet	164,400	✓	✓	2055
17	117	S/C Test / Fill Packet	164,400		✓	2055
18	118	S/C Test / Fill Packet	164,400		✓	2055
19	119	S/C Test / Fill Packet	164,400	✓		2055
20	120	S/C Test / Fill Packet	164,400			2055
21	121	S/C Test / Fill Packet	164,400		✓	2055

4.6.4 Mission Data

All fields in the spacecraft mission data packets documented below are big endian.

4.6.4.1 Test/Fill Packet

The spacecraft generates Test / Fill packets (APID 100-131) at a 10 Hz rate when enabled. A command to the satellite is necessary to enable or disable generation of a given Test/Fill packet. Only one Test/Fill packet (i.e. single APID) can be enabled at a time. APID 121 is expected to be enabled during instrument memory dumps. The packet size is 2055 bytes. The structure of APIDs 100-131 are identical and are shown in Figure 4.6-1. Since the content of the Test / Fill packet is a fixed pattern that does not need to be interpreted, there is no User Data Field Table.

Check the JPSS MIS Server at https://jpssmis.gsfc.nasa.gov/frontmenu_dsp.cfm to verify that this is the correct version prior to use.

Fixed Packet Length 2055 Octets (typical)

	PACKET PRIMARY HEADER							Secondary Header	User Data Field	
	Version No.	Packet Identification			Packet Sequence Control (PSC)		Packet Length	Time Data	Fill Data	
		Type Indicator	Sec Hdr Flag	APID	Sequence Flags	Sequence Count			Fill Data	
Bits	3	1	1	11	2	14	16	64	16328 (typ)	Total 16440
Octets	2				2		2	8	2041 (typ)	2055
Value	000	0	1	varies	11	varies	800_{16}(typ)	varies	0xA5A5A5A5A5A5A5A5…..	

0 = Telemetry Packet

Secondary Header Present

Standalone Packet

Figure 4.6-1. Spacecraft Test / Fill Packet Format

4.6.4.2 Attitude and Ephemeris Packet

The spacecraft generates one Attitude and Ephemeris packet (APID 11) every second. Each packet contains a time field for position and velocity, the position and velocity coordinates of the satellite, a time field for attitude, and attitude quaternions of the satellite. The position and velocity coordinates are in GPS Earth Centered Earth Fixed (ECEF) coordinates. The Control Frame Attitude Quaternions are relative to J2000, The quaternion Q is defined as Q = Q1i + Q2j + Q3k + Q4. The quantity Q4 is the scalar part of the quaternion and Q1i + Q2j + Q3k is the vector part. The packets are 71 bytes fixed length. The packet structure is shown in Figure 4.6-2 Spacecraft Attitude & Ephemeris Packet Format. The user data fields are listed in Table 4.6-2.

Fixed Packet Length 71 Octets

	PACKET PRIMARY HEADER							SECONDARY HEADER	User Data Field						
	Verson No.	Packet Identification			Packet Sequence Control (PSC)		Packet Length		Attitude & Ephemeris Data						
		Type Indicator	Sec Hdr Flag	APID	Sequence Flags	Sequence Count		Time Data	Spacecraft ID	Ephemeris Valid Time	Ephemeris Position (ECEF)	Ephemeris Velocity (ECEF)	Attitude Valid Time	Control Frame Attitude Quaternions	
Bits	3	1	1	11	2	14	16	64	8	64	96	96	64	128	TOTAL 568
Octets	2				2		2	8	1	8	12	12	8	16	71
Value	000	0	1	$0B_{16}$	11	varies	38_{16}	varies	$9D_{16}$	varies	varies	varies	varies	varies	

0 = Telemetry Packet

Secondary Header Present

Standalone Packet

Figure 4.6-2. Spacecraft Attitude & Ephemeris Packet Format

Check the JPSS MIS Server at https://jpssmis.gsfc.nasa.gov/frontmenu_dsp.cfm to verify that this is the correct version prior to use.

Table 4.6-2. Spacecraft Attitude & Ephemeris Packet User Data Fields

Start Bit	Bit Size	Mnemonic Name	Description	Units OR State Value	Conversion Coefficients (formula or C5,C4,C3,C2,C1,C0) OR State Name	Data Type
0	8	N/A	Spacecraft ID	N/A	N/A	U
8	16	N/A	Ephemeris Valid Time, Days Since 1/1/1958	N/A	N/A	U
24	32	N/A	Ephemeris Valid Time, Milliseconds of Day	N/A	N/A	U
56	16	N/A	Ephemeris Valid Time, Microseconds of Milliseconds	N/A	N/A	U
72	32	N/A	Ephemeris Position (ECEF) X	m	N/A	F
104	32	N/A	Ephemeris Position (ECEF) Y	m	N/A	F
136	32	N/A	Ephemeris Position (ECEF) Z	m	N/A	F
168	32	N/A	Ephemeris Velocity (ECEF) X	m/s	N/A	F
200	32	N/A	Ephemeris Velocity (ECEF) Y	m/s	N/A	F
232	32	N/A	Ephemeris Velocity (ECEF) Z	m/s	N/A	F
264	16	N/A	Attitude Valid Time, Days Since 1/1/1958	N/A	N/A	U
280	32	N/A	Attitude Valid Time, Milliseconds of Day	N/A	N/A	U
312	16	N/A	Attitude Valid Time, Microseconds of Milliseconds	N/A	N/A	U
328	32	N/A	Control Frame Attitude Q1	N/A	N/A	F
360	32	N/A	Control Frame Attitude Q2	N/A	N/A	F
392	32	N/A	Control Frame Attitude Q3	N/A	N/A	F
424	32	N/A	Control Frame Attitude Q4	N/A	N/A	F

Check the JPSS MIS Server at https://jpssmis.gsfc.nasa.gov/frontmenu_dsp.cfm to verify that this is the correct version prior to use.

5. Acronyms and Abbreviations

μsec	microsecond
-A-	
A/D	Analog to Digital
ACA	Azimuth Control Assembly
ADC	Analog to Digital Converter
ADC	Analog-to-digital Converter
ADCS	Attitude Determination and Control System
APID	Application Process Identifier
ASP	Analog Signal Processor
ATMS	Advanced Technology Microwave Sounder
A-to-D	Analog to Digital
-B-	
BATC	Ball Aerospace & Technologies Corp.
BB	Black Body
BCP	Ball Commercial Platform
bps	Bits per seconds
Bps	Bytes per Second
BSA	Biaxial Scan Assembly
-C-	
C&T	Command and Telemetry
C3S	Command, Control and Communications Segment
CADU	Channel Access Data Unit
CBIT	Continuous Built-In Test
CCA	Circuit Card Assembly
CCD	Charged Coupled Device
CCSDS	Consultative Committee for Space Data Systems
CDP	Command and Data Processor
CDRL	Contract Data Requirements List
CERES	Clouds and Earth's Radiant Energy System
CMD	Command
CMLB	Ceramic Multi-Layered Board
cPCI	Compact Peripheral Component Interface
CPU	Central Processing Unit
CrIMSS	Cross-track Infrared and Microwave Sounding Suite
CrIS	Cross-track Infrared sounder
CSO	Cavity Stabilized Oscillator
CSS	Coarse Sun Sensor
CVCDU	Coded Virtual Channel Data Unit

Check the JPSS MIS Server at https://jpssmis.gsfc.nasa.gov/frontmenu_dsp.cfm to verify that this is the correct version prior to use.

-D-

DA	Dynamic Alignment
DAA	Data Acquisition Assembly
DAP	Data Acquisition Processor
DCA	Data Acquisition Converter Assembly
Dec	Decimal (base 10)
DF	Data Format
DFB	Distributed Feedback
DID	Data Item Description
DMA	Direct Memory Access
DMP	Dump
DN	Digital Number
DNB	Day Night Band
DOY	Day of Year
DPLX	Duplex
DPP	Digital Preprocessor
DSP	Digital Signal Processor
DTU	Digital Telemetry Unit
DWL	Dwell

-E-

ECA	Elevation Control Assembly
EDR	Environmental Data Record
EEPROM	Electronically Erasable Programmable Read Only Memory
EMI	Electromagnetic Interference
Engr	Engineering
EOS	Earth Observing System
EPM	Earth-Pointing Mode

-F-

FIR	Finite Impulse Response
FOR	Field of Regard
FOV	Field of View
FPA	Focal Plane Array
FPGA	Field Programmable Gate Array
FSW	Flight Software
FTS	Fourier Transform Spectrometer

-G-

GDO	Gunn Diode Oscillator
GHz	gigahertz
GPS	Global Positioning System
GSFC	Goddard Space Flight Center

-H-

Hex	Hexadecimal (base 16)

HgCdTe	Mercury Cadmium Telluride
HK	Housekeeping
HKPG	Housekeeping
HOP	High Output Paraffin
HRD	High-Rate Data
HSK, Hskp	Housekeeping
HW	Hardware
Hz	Hertz (not the rental cars)

-I-

I/O	Input/Output
IBIT	Initiated Built-in Test
ICD	Interface Control Document
ICM	Instrument Calibration Module
ICP	Instrument Control Processor
ICSBB	Internal Calibration Source Blackbody
ICT	Internal Calibration Target
ID	Identifier
IDPS	Interface Data Processing Segment
IE	Interferometer Electronics
IF	Interface
IFC	Instrument Flight Computer
IFOV	Instrument Field of View or Image Field of View
ILS	Instrument Line Shape
IM	Interferometer Module
IOC	In-orbit Checkout
IPO	Integrated Program Office
IR	Infrared
IRD	Interface Requirements Document
IRU	Inertial Reference Unit

-J-

JFET	Junction Field Effect Transistor

-K-

KAV	Ka and V Bands
KAV_WL	Ka and V Bands Warm Load (Calibration Target)
kb	kilobit
kB	kilobyte
kib	decimal kilobit (1000 bits)
Kib/s	kilobits per second
km	kilometer

-L-

LED	Light Emitting Diode
LEO&A	Launch, Early Orbit & Acquisition

LEO&A	Launch, Early Orbit & Anomaly
LGS	Low Gain Setting
LPC	Limb Profiler Calibration
LPL	Limb Profiler Long
LPS	Limb Profiler Short
LRD	Low-Rate Data
LSB	Least Significant Byte
LSW	Least Significant Word
LVDS	Low Voltage Differential Signaling
LW	Longwave
LWIR	Long Wave Infrared

-M-

M_PDU	Multiplexing Protocol Data Unit
MAM	Mirror Attenuator Mosaic
Mb	Megabit
Mbps	Megabits per second
MBps	Megabytes per second
MBytes	Megabytes
MCT	Mercury Cadmium Telluride
MDF	Mission Data Formatter
MEB	Main Electronics Box
MGS	Medium Gain Setting
MHz	Megahertz
MLI	Multilayer Insulation
MMC	Mission Management Center
MPD	Maximum Path Difference
MPM	Mission-Pointing Mode
MSB	Most Significant Byte (or bit)
msec	millisecond
MSW	Most Significant Word
MUX	Multiplexer
MWIR	Mid-wave Infrared

-N-

N/A	Not Applicable
NASA	National Aeronautics and Space Administration
NEdT	Noise Equivalent Spectral Radiance
NGES	Northrop-Grumman Electronic Systems
NGST	Northrop-Grumman Space Technology
nm	Nanometers
NP	Nadir Profile
NPC	Nadir Profiler Calibration
NPOESS	National Polar-Orbiting Operational Environmental Satellite System
NPP	NPOESS Preparatory Project
NRZ-L	Non-Return to Zero - Level

NRZ-M	Non-Return to Zero - Mark
NTC	Nadir Total Column
NVM	Non-volatile Memory

-O-

OCD	Operational Concept Description
OCXO	Oven Controlled Crystal Oscillator
OIW	Offset in Words
OMA	Opto-Mechanical Assembly
OMPS	Ozone Mapping Profiling Suite
OPD	Optical Path Difference

-P-

P/A	Preamp
PAM	Passive Analog Monitor
PAT	Passive Analog Temperature
PCA	Power Converter Assembly
PCE	Processing and Control Electronics
PGA	Programmable Gain Amplifier
pkt	Packet
PLB	Payload Bus
PLLO	Phase Lock-Loop Oscillator
PLO	Phase Lock-loop Oscillator
PRT	Platinum Resistance Temperature
PS	Porchswing

-Q-

QPSK	Quadrature Phase Shift Key

-R-

R/T	Real-Time
RAD	Radiation
RAM	Random Access Memory
RDR	Raw Data Record
RF	Radio Frequency
RFE	Receiver Front Ends
RPS	Receiver Power Supply
R-S	Reed-Solomon
R/T	Real-Time

-S-

S/C	Spacecraft
SAW	Surface Acoustic Wave
SBRS	Santa Barbara Remote Sensing (Raytheon SAS)
SCC	Spacecraft Control Computer
SCIF	Spacecraft Interface board

SD	Solar Diffuser
SDE	Scan Drive Electronics
SDM	Scan Drive Mechanism
SDR	Sensor Data Record
SDSM	Solar Diffuser Stability Monitor
SMA	Sensor Module Assembly
SMCA	Survival Mode Configuration Assembly
SMD	Stored Mission Data
SNR	Signal to Noise Ratio
SOC	State-of-Charge
SPA	Signal Processing Assembly
SPM	Sun-Pointing Mode
SPS	Solar Presence Sensors
SQPSK	Staggered Quadrature Phase Shift Key
SS	Space Segment
SSA	Sensor Scan Assembly
SSM	Scene Selection Module
SSR	Solid State Recorder
SV	Space View
SW	Shortwave
SWICS	Shortwave Internal Calibration Source
SWIR	Shortwave Infrared

-T-

TBD	To be determined
TBS	To be supplied
TBR	To be resolved
TC	Total Column, Total Channel
TCC	Total Column Calibration
TDRSS	Tracking Data Relay Satellite System
TEC	Thermal Electric Cooler
TID	Table Identifier
TLM	Telemetry
Tlmy	Telemetry
TPG	Timing Pattern Generator

-U-

UART	Universal Asynchronous Receiver/Transmitter
UP	Uninterruptible Power
UPS	Uninterruptible Power Supply
UTC	Coordinated Universal Time

-V-

VC	Virtual Channel
VCDU	Virtual Channel Data Unit
VCID	Virtual Channel Identifier

Check the JPSS MIS Server at https://jpssmis.gsfc.nasa.gov/frontmenu_dsp.cfm to verify that this is the correct version prior to use.

VD	Video Digitizer
VIIRS	Visible Infrared Imaging Radiometer Suite

-W-

WG	W and G Bands
WG_WL	W and G Band Warm Load (Calibration target)

-XYZ-

ZnSe	Zinc Selenium
ZPD	Zero Path Difference